SONY

DIGITAL MASTER SWITCHER

DVS-M1000C

DIGITAL VIDEO SWITCHER

DVS-7000

DIGITAL MULTI KEYER

DMK-7000

MASTER SWITCHER CONTROL PANEL
BKDS-M1010

TYPE-3 D SWITCHER CONTROL PANEL
BKDS-7011/7011R/7011LR
BKDS-7012/7012R/7012LR

TYPE-4 D SWITCHER CONTROL PANEL
BKDS-7021/7021R/7021LR
BKDS-7022/7022R/7022LR
BKDS-7023/7023R/7023LR

KEYER REMOTE CONTROL PANEL
BKDS-7060

BKDS-2031	**BKDS-7110**	**BKDS-7430**	**BKDS-M1810**
BKDS-2032	**BKDS-7111**	**BKDS-7443**	**BKDS-M1820**
BKDS-2041	**BKDS-7112**	**BKDS-7445**	**BZS-7010**
BKDS-2070	**BKDS-7133**	**BKDS-7690**	**BZS-7020**
BKDS-7001	**BKDS-7161**	**BKDS-7691**	**BZS-7310**
BKDS-7030	**BKDS-7162**	**BKDS-M1040**	**BZS-7320**
BKDS-7031	**BKDS-7180**	**BKDS-M1090**	**BZS-7350**
BKDS-7032	**BKDS-7270**	**BKDS-M1310**	**BZS-7360**
BKDS-7075	**BKDS-7280**	**BKDS-M1441**	**BZS-M1020**
BKDS-7090	**BKDS-7300**	**BKDS-M1442**	**BZS-M1120**
BKDS-7102	**BKDS-7320**	**BKDS-M1690**	

MAINTENANCE MANUAL Part 2

Volume 5 1st Edition (Revised 1)

SCHEMATIC DIAGRAMS 1 (A through I)

⚠警告

このマニュアルは，サービス専用です。
お客様が，このマニュアルに記載された設置や保守，点検，修理など行うと感電や火災，人身事故につながることがあります。
危険をさけるため，サービストレーニングを受けた技術者のみご使用ください。

⚠WARNING

This manual is intended for qualified service personnel only.
To reduce the risk of electric shock, fire or injury, do not perform any servicing other than that contained in the operating instructions unless you are qualified to do so. Refer all servicing to qualified service personnel.

⚠WARNUNG

Die Anleitung ist nur für qualifiziertes Fachpersonal bestimmt.
Alle Wartungsarbeiten dürfen nur von qualifiziertem Fachpersonal ausgeführt werden. Um die Gefahr eines elektrischen Schlages, Feuergefahr und Verletzungen zu vermeiden, sind bei Wartungsarbeiten strikt die Angaben in der Anleitung zu befolgen. Andere als die angegeben Wartungsarbeiten dürfen nur von Personen ausgeführt werden, die eine spezielle Befähigung dazu besitzen.

⚠AVERTISSEMENT

Ce manual est destiné uniquement aux personnes compétentes en charge de l'entretien. Afin de réduire les risques de décharge électrique, d'incendie ou de blessure n'effectuer que les réparations indiquées dans le mode d'emploi à moins d'être qualifié pour en effectuer d'autres. Pour toute réparation faire appel à une personne compétente uniquement.

DVS-M1000C	Serial No.10001 and Higher
DVS-7000	Serial No.10001 and Higher
DMK-7000	Serial No.10001 and Higher
BKDS-2031	Serial No.10001 and Higher
BKDS-2032	Serial No.10001 and Higher
BKDS-2041	Serial No.10001 and Higher
BKDS-2070	Serial No.10001 and Higher
BKDS-7001	Serial No.10001 and Higher
BKDS-7011	Serial No.10001 and Higher
BKDS-7012	Serial No.10001 and Higher
BKDS-7021	Serial No.10001 and Higher
BKDS-7022	Serial No.10001 and Higher
BKDS-7023	Serial No.10001 and Higher
BKDS-7011R	Serial No.10001 and Higher
BKDS-7012R	Serial No.10001 and Higher
BKDS-7021R	Serial No.10001 and Higher
BKDS-7022R	Serial No.10001 and Higher
BKDS-7023R	Serial No.10001 and Higher
BKDS-7011LR	Serial No.10001 and Higher
BKDS-7012LR	Serial No.10001 and Higher
BKDS-7021LR	Serial No.10001 and Higher
BKDS-7022LR	Serial No.10001 and Higher
BKDS-7023LR	Serial No.10001 and Higher
BKDS-7030	Serial No.10001 and Higher
BKDS-7031	Serial No.10001 and Higher
BKDS-7032	Serial No.10001 and Higher
BKDS-7060	Serial No.10001 and Higher
BKDS-7075	Serial No.10001 and Higher
BKDS-7090	Serial No.10001 and Higher
BKDS-7102	Serial No.10001 and Higher
BKDS-7110	Serial No.10001 and Higher
BKDS-7111	Serial No.10001 and Higher
BKDS-7112	Serial No.10001 and Higher
BKDS-7133	Serial No.10001 and Higher
BKDS-7161	Serial No.10001 and Higher
BKDS-7162	Serial No.10001 and Higher
BKDS-7180	Serial No.10001 and Higher
BKDS-7270	Serial No.10001 and Higher
BKDS-7280	Serial No.10001 and Higher
BKDS-7300	Serial No.10001 and Higher
BKDS-7320	Serial No.10001 and Higher
BKDS-7430	Serial No.10001 and Higher
BKDS-7443	Serial No.10001 and Higher
BKDS-7445	Serial No.10001 and Higher
BKDS-7690	Serial No.10001 and Higher
BKDS-7691	Serial No.10001 and Higher
BKDS-M1010	Serial No.10001 and Higher
BKDS-M1040	Serial No.10001 and Higher
BKDS-M1090	Serial No.10001 and Higher
BKDS-M1310	Serial No.10001 and Higher
BKDS-M1441	Serial No.10001 and Higher
BKDS-M1442	Serial No.10001 and Higher
BKDS-M1690	Serial No.10001 and Higher
BKDS-M1810	Serial No.10001 and Higher
BKDS-M1820	Serial No.10001 and Higher
BZS-7010	Serial No.10001 and Higher
BZS-7020	Serial No.10001 and Higher
BZS-7310	Serial No.10001 and Higher
BZS-7320	Serial No.10001 and Higher
BZS-7350	Serial No.10001 and Higher
BZS-7360	Serial No.10001 and Higher
BZS-M1020	Serial No.10001 and Higher
BZS-M1120	Serial No.10001 and Higher

目次
Table of Contents

このマニュアルについて

本書の目的 3
コントロールパネルの機種名表記について 3
構成 3
関連マニュアル 4

Manual Structure

Purpose of this manual 3
About the model names of the control panels 3
Contents 3
Related manuals 4

1. Location of Mounted Circuit Boards

1-1. DVS-M1000C 1-2
1-2. BKDS-M1010 1-3
1-3. DVS-7000 1-4
1-4. BKDS-7011 1-6
1-5. BKDS-7012 1-7
1-6. BKDS-7021 1-8
1-7. BKDS-7022 1-9
1-8. BKDS-7023 1-10
1-9. BKDS-7011R 1-11
1-10. BKDS-7012R 1-12
1-11. BKDS-7021R 1-13
1-12. BKDS-7022R 1-14
1-13. BKDS-7023R 1-15
1-14. BKDS-7011LR 1-16
1-15. BKDS-7012LR 1-17
1-16. BKDS-7021LR 1-18
1-17. BKDS-7022LR 1-19
1-18. BKDS-7023LR 1-20
1-19. BKDS-7030/7031/7075 1-21
1-20. DMK-7000 1-22
1-21. BKDS-7060 1-23

2. Overall Block Diagrams & Frame Wiring

2-1. DVS-M1000C OVERALL BLOCK 2-2
FRAME WIRING 2-3
2-2. BKDS-M1010 OVERALL BLOCK 2-4
FRAME WIRING 2-5
2-3. DVS-7000 OVERALL BLOCK 2-8
FRAME WIRING 2-10
2-4. BKDS-7011/7012 OVERALL BLOCK 2-12
FRAME WIRING 2-15
2-5. BKDS-7021/7022/7023 OVERALL BLOCK 2-24
FRAME WIRING 2-27
2-6. BKDS-701xR/701xLR OVERALL BLOCK 2-37
FRAME WIRING 2-40
2-7. BKDS-702xR/702xLR OVERALL BLOCK 2-49
FRAME WIRING 2-52
2-8. DMK-7000 OVERALL BLOCK 2-62
FRAME WIRING 2-63
2-9. BKDS-7060 OVERALL BLOCK/FRAME WIRING 2-64

3. Schematic Diagrams

ADC-21 BOARD 3-4
ADC-22 BOARD 3-17
ADI-3 BOARD 3-26
APR-8 BOARD 3-28
APR-9 BOARD 3-44
AVD-3 BOARD 3-50
AVD-4 BOARD 3-58
BD-26 BOARD 3-64
CN-1140 BOARD 3-72
CN-1143 BOARD 3-74
CN-1145 BOARD 3-77
CN-1146 BOARD 3-80
CN-1148 BOARD 3-82
CN-1171 BOARD 3-84
CN-1197 BOARD 3-88
CN-1295 BOARD 3-89
CPU-156 BOARD 3-90
CPU-191 BOARD 3-104
CPU-192 BOARD 3-118
CPU-198 BOARD 3-136
CPU-199 BOARD 3-142

CRK-10 BOARD 3-145
CRK-11 BOARD 3-162
DA-94 BOARD 3-186
DEC-85 BOARD 3-188
DI-22 BOARD 3-190
DI-24 BOARD 3-203
ENC-34 BOARD 3-204
FM-41 BOARD 3-220
IF-523 BOARD 3-227
IF-533 BOARD 3-228
IF-629 BOARD 3-231

このマニュアルについて
Manual Structure

本書の目的

本書は，デジタルマスタースイッチャー DVS-M1000C，デジタルビデオスイッチャー DVS-7000，デジタルマルチキーヤー DMK-7000 のメンテナンスマニュアル パート2です。
本書は，サービスエンジニアの方々にご使用いただくことを想定し，これらの機種の部品レベルまでのサービスを前提とした情報（ブロック図，補修用部品，部品交換要項，半導体ピンアサイン，マウント図，回路図等）を記載しています。

Purpose of this manual

This manual is the maintenance manual part 2 of Digital Master Switcher DVS-M1000C, Digital Video Switcher DVS-7000, Digital Multi Keyer DMK-7000.
This manual is intended for use by trained system and service engineers, and describes the information for detailed service information with the intention of servicing including block diagrams, detailed spare parts list, parts replacement, semiconductor pin assignments, board layouts, schematic diagrams.

コントロールパネルの機種名表記について

本書では，コントロールパネルの機種名を以下のように表記します。

About the model names of the control panels

This manual is described the model name of the control panels as shown the table below.

Model name	Short model name	Shortest model name
BKDS-7011	BKDS-701x	BKDS-70xx
BKDS-7012		
BKDS-7021	BKDS-702x	
BKDS-7022		
BKDS-7023		
BKDS-7011R	BKDS-701xR	BKDS-70xxR
BKDS-7012R		
BKDS-7021R	BKDS-702xR	
BKDS-7022R		
BKDS-7023R		
BKDS-7011LR	BKDS-701xLR	BKDS-70xxLR
BKDS-7012LR		
BKDS-7021LR	BKDS-702xLR	
BKDS-7022LR		
BKDS-7023LR		

構成

本書の構成を把握していただくために，全章の概略を以下に説明します。

メンテナンスマニュアル パート2 Volume1
(ブロック図)
第1章 Location of Mounted Circuit Boards
基板配置図を記載しています。
第2章 Overall Block Diagrams and Frame Wirings
オーバーオールブロック図とフレーム図を記載しています。
第3章 Block Diagrams
ブロック図をアルファベット順で記載しています。

メンテナンスマニュアル パート2 Volume2
(補修用部品，部品交換要項)
第1章 Location of Mounted Circuit Boards
基板配置図を記載しています。
第2章 Spare Parts
補修用部品を記載しています。
第3章 サービスインフォメーション
延長基板，デジタル TP ケーブルの使用方法を記載しています。
第4章 部品交換要項
コネクタ，電源部の交換を記載しています。

メンテナンスマニュアル パート2 Volume3
(半導体ピンアサイン)
第1章 Semiconductor Pin Assignments
半導体のピンアサインを記載しています。

メンテナンスマニュアル パート2 Volume4
(マウント図)
第1章 Location of Mounted Circuit Boards
基板配置図を記載しています。
第2章 Board Layouts
基板のマウント図をアルファベット順で記載しています。

Contents

This manual is organized by following sections.

Maintenance Manual Part2 Volume1
(Block diagrams)
Section 1 Location of Mounted Circuit Boards
This section describes the location of mounted circuit boards.
Section 2 Overall Block Diagrams and Frame Wirings
This section describes the overall block diagrams and frame wirings.
Section 3 Block Diagrams
This section describes the block diagrams in the alphabetical order.

Maintenance Manual Part2 Volume2
(Spare parts and Parts replacement)
Section 1 Location of Mounted Circuit Boards
This section describes the location of mounted circuit boards.
Section 2 Spare Parts
This section describes detailed spare parts list.
Section 3 Service Overview
This section describes the use of extension board and the use of digital TP cable.
Section 4 Replacement of Main Parts
This section describes replacement of connectors and power supply block.

Maintenance Manual Part2 Volume3
(Semiconductor pin assignments)
Section 1 Semiconductor Pin Assignments
This section describes the semiconductor pin assignments.

Maintenance Manual Part2 Volume4
(Board layouts)
Section 1 Location of Mounted Circuit Boards
This section describes the location of mounted circuit boards.
Section 2 Board Layouts
This section describes the board layouts of mounted circuit boards in the alphabetical order.

メンテナンスマニュアル　パート2 Volume5
(Schematic diagrams 1 A~I)
第1章　Location of Mounted Circuit Boards
基板配置図を記載しています。
第2章　Overall Block Diagrams and Frame Wirings
オーバーオールブロック図とフレーム図を記載しています。
第3章　Schematic Diagrams
基板回路図をAからIまでのアルファベット順で記載しています。

メンテナンスマニュアル　パート2 Volume6
(Schematic diagrams 2 K~Z)
第1章　Location of Mounted Circuit Boards
基板配置図を記載しています。
第2章　Overall Block Diagrams and Frame Wirings
オーバーオールブロック図とフレーム図を記載しています。
第3章　Schematic Diagrams
基板回路図をKからZまでのアルファベット順で記載しています。

Maintenance Manual　Part2 Volume5
(Schematic diagrams 1 A through I)
Section 1　Location of Mounted Circuit Boards
This section describes the location of mounted circuit boards.
Section 2　Overall Block Diagrams and Frame Wirings
This section describes the overall block diagrams and frame wirings.
Section 3　Schematic Diagrams
This section describes the schematic diagrams of the mounted circuit boards in the alphabetical order from A to I.

Maintenance Manual　Part2 Volume6
(Schematic diagrams 2 K through Z)
Section 1　Location of Mounted Circuit Boards
This section describes the location of mounted circuit boards.
Section 2　Overall Block Diagrams and Frame Wirings
This section describes the overall block diagrams and frame wirings.
Section 3　Schematic Diagrams
This section describes the schematic diagrams of the mounted circuit boards in the alphabetical order from K to Z.

関連マニュアル

これらの機種には，この「メンテナンスマニュアル パート2」のほかに，下記のマニュアルが用意されています。

- ユーザーズガイド
  (BZS-M1020/M1120/7010/7310/7350に付属)
  これらの機種を実際に運用および操作するのに必要なマニュアルです。

- オペレーションマニュアル
  (DVS-M1000C, DVS-7000, DMK-7000, BKDS-7060に付属)
  これらの機種の概要，システム構成例，仕様について記載したマニュアルです。

- インストレーションマニュアル
  (DVS-M1000C, DVS-7000, DMK-7000, BKDS-7060に付属)
  これらの機種の納入設置時に必要な情報を記載しています。

- メンテナンスマニュアル パート1
  (DVS-M1000C, DVS-7000, DMK-7000, BKDS-7060に付属)
  これらの機種の保守に関する情報，あるいはブロックおよび基板交換によるサービスを前提とした情報を記載したマニュアルです。

Related manuals

The following manuals are prepared for DVS-M1000C, DVS-7000 and DMK-7000.

- User's Guide
  (Supplied with BZS-M1020, M1120, 7020, 7320 and 7360)
  This manual describes the application and operation of DVS-M1000C, DVS-7000 and DMK-7000.

- Operation Manual
  (Supplied with DVS-M1000C, DVS-7000, DMK-7000 and BKDS-7060)
  This manual describes the overview, system configuration examples and specification.

- Installation Manual
  (Supplied with DVS-M1000C, DVS-7000, DMK-7000 and BKDS-7060)
  This manual describes the information when installing DVS-M1000C, DVS-7000, DMK-7000 and BKDS-7060.

- Maintenance Manual　Part1
  (Supplied with DVS-M1000C, DVS-7000, DMK-7000 and BKDS-7060)
  This manual describes the information for general service and periodic maintenance with the intention of servicing including the replacement of the principal blocks and mounted circuit boards.

Section 1
Location of Mounted Circuit Boards

DVS-M1000C	Digital Master Switcher	Page 1-2
Option	**Function name**	
BKDS-7102	12Input Serial Digital Board	
BKDS-7162	Serial Digital Output Board	
BKDS-7270	Key Border Board	
BKDS-M1310	Keyer Expansion Boards	
BKDS-M1441	Frame Memory Board	
BKDS-M1690	Redundant Power Supply Unit	
BKDS-M1810	Audio Process Boards	
BKDS-M1820	Audio Channel Expansion Boards	

BKDS-M1010	Master Switcher Control Panel	Page 1-3
Option	**Function name**	
BKDS-M1040	Audio Faders	
BKDS-M1090	Redundant Power Supply Unit	

DMK-7000	Digital Multi Keyer	Page 1-22
Option	**Function name**	
BKDS-7111	Analog Composite Input Board	
BKDS-7112	Serial Digital Input Board	
BKDS-7161	Analog Composite Output Board	
BKDS-7162	Serial Digital Output Board	
BKDS-7180	DME Interface Board	
BKDS-7300	Linear Keyer Board	
BKDS-7320	Luminance Keyer/Border Board	
BKDS-7430	Color Vector Keyer Board	
BKDS-7443	Frame Memory Board	
BKDS-7691	Redundant Power Supply Unit	

BKDS-7060	Keyer Remote Control Panel	Page 1-23

DVS-7000	Digital Video Switcher	Page 1-4
Option	**Function name**	
BKDS-2031	Chromakey Board	
BKDS-2032	Chromakey Upgrade Board	
BKDS-2041	Frame Memory Board	
BKDS-2070	Enhanced Wipe Generator Board	
BKDS-7102	12Input Serial Digital Board	
BKDS-7110	Blank Input Adaptor Board	
BKDS-7111	Analog Composite Input Board	
BKDS-7112	Serial Digital Input Board	
BKDS-7133	CRK Analog Component Input Board	
BKDS-7161	Analog Composite Output Board	
BKDS-7162	Serial Digital Output Board	
BKDS-7270	Key Border Board	
BKDS-7445	Frame Memory Composite Adaptor Board	
BKDS-7446	Frame Memory Component Adaptor Board	
BKDS-7690	Redundant Power Supply Unit	

BKDS-7011	Type-3D Switcher Control Panel	Page 1-6
Option	**Function name**	
BKDS-7001	Control Port Expansion Board	
BKDS-7030	Key Frame Control Panel Unit	Page 1-21
BKDS-7031	DME Control Panel Unit	Page 1-21
BKDS-7032	DSK Control Panel Unit	
BKDS-7075	Control Panel Remote Adaptor	Page 1-21
BKDS-7090	Redundant Power Supply Unit	

BKDS-7011R	Type-3D Switcher Control Panel	Page 1-11
Option	**Function name**	
BKDS-7001	Control Port Expansion Board	
BKDS-7030	Key Frame Control Panel Unit	Page 1-21
BKDS-7031	DME Control Panel Unit	Page 1-21
BKDS-7032	DSK Control Panel Unit	
BKDS-7075	Control Panel Remote Adaptor	Page 1-21
BKDS-7090	Redundant Power Supply Unit	

BKDS-7011LR	Type-3D Switcher Control Panel	Page 1-16
Option	**Function name**	
BKDS-7001	Control Port Expansion Board	
BKDS-7030	Key Frame Control Panel Unit	Page 1-21
BKDS-7031	DME Control Panel Unit	Page 1-21
BKDS-7032	DSK Control Panel Unit	
BKDS-7075	Control Panel Remote Adaptor	Page 1-21
BKDS-7090	Redundant Power Supply Unit	

BKDS-7012	Type-3D Switcher Control Panel	Page 1-7
Option	**Function name**	
BKDS-7001	Control Port Expansion Board	
BKDS-7030	Key Frame Control Panel Unit	Page 1-21
BKDS-7031	DME Control Panel Unit	Page 1-21
BKDS-7032	DSK Control Panel Unit	
BKDS-7075	Control Panel Remote Adaptor	Page 1-21
BKDS-7090	Redundant Power Supply Unit	

BKDS-7012R	Type-3D Switcher Control Panel	Page 1-12
Option	**Function name**	
BKDS-7001	Control Port Expansion Board	
BKDS-7030	Key Frame Control Panel Unit	Page 1-21
BKDS-7031	DME Control Panel Unit	Page 1-21
BKDS-7032	DSK Control Panel Unit	
BKDS-7075	Control Panel Remote Adaptor	Page 1-21
BKDS-7090	Redundant Power Supply Unit	

BKDS-7012LR	Type-3D Switcher Control Panel	Page 1-17
Option	**Function name**	
BKDS-7001	Control Port Expansion Board	
BKDS-7030	Key Frame Control Panel Unit	Page 1-21
BKDS-7031	DME Control Panel Unit	Page 1-21
BKDS-7032	DSK Control Panel Unit	
BKDS-7075	Control Panel Remote Adaptor	Page 1-21
BKDS-7090	Redundant Power Supply Unit	

BKDS-7021	Type-4D Switcher Control Panel	Page 1-8
Option	**Function name**	
BKDS-7001	Control Port Expansion Board	
BKDS-7030	Key Frame Control Panel Unit	Page 1-21
BKDS-7031	DME Control Panel Unit	Page 1-21
BKDS-7075	Control Panel Remote Adaptor	Page 1-21
BKDS-7090	Redundant Power Supply Unit	

BKDS-7021R	Type-4D Switcher Control Panel	Page 1-13
Option	**Function name**	
BKDS-7001	Control Port Expansion Board	
BKDS-7030	Key Frame Control Panel Unit	Page 1-21
BKDS-7031	DME Control Panel Unit	Page 1-21
BKDS-7075	Control Panel Remote Adaptor	Page 1-21
BKDS-7090	Redundant Power Supply Unit	

BKDS-7021LR	Type-4D Switcher Control Panel	Page 1-18
Option	**Function name**	
BKDS-7001	Control Port Expansion Board	
BKDS-7030	Key Frame Control Panel Unit	Page 1-21
BKDS-7031	DME Control Panel Unit	Page 1-21
BKDS-7075	Control Panel Remote Adaptor	Page 1-21
BKDS-7090	Redundant Power Supply Unit	

BKDS-7022	Type-4D Switcher Control Panel	Page 1-9
Option	**Function name**	
BKDS-7001	Control Port Expansion Board	
BKDS-7030	Key Frame Control Panel Unit	Page 1-21
BKDS-7031	DME Control Panel Unit	Page 1-21
BKDS-7075	Control Panel Remote Adaptor	Page 1-21
BKDS-7090	Redundant Power Supply Unit	

BKDS-7022R	Type-4D Switcher Control Panel	Page 1-14
Option	**Function name**	
BKDS-7001	Control Port Expansion Board	
BKDS-7030	Key Frame Control Panel Unit	Page 1-21
BKDS-7031	DME Control Panel Unit	Page 1-21
BKDS-7075	Control Panel Remote Adaptor	Page 1-21
BKDS-7090	Redundant Power Supply Unit	

BKDS-7022LR	Type-4D Switcher Control Panel	Page 1-19
Option	**Function name**	
BKDS-7001	Control Port Expansion Board	
BKDS-7030	Key Frame Control Panel Unit	Page 1-21
BKDS-7031	DME Control Panel Unit	Page 1-21
BKDS-7075	Control Panel Remote Adaptor	Page 1-21
BKDS-7090	Redundant Power Supply Unit	

BKDS-7023	Type-4D Switcher Control Panel	Page 1-10
Option	**Function name**	
BKDS-7001	Control Port Expansion Board	
BKDS-7030	Key Frame Control Panel Unit	Page 1-21
BKDS-7031	DME Control Panel Unit	Page 1-21
BKDS-7075	Control Panel Remote Adaptor	Page 1-21
BKDS-7090	Redundant Power Supply Unit	

BKDS-7023R	Type-4D Switcher Control Panel	Page 1-15
Option	**Function name**	
BKDS-7001	Control Port Expansion Board	
BKDS-7030	Key Frame Control Panel Unit	Page 1-21
BKDS-7031	DME Control Panel Unit	Page 1-21
BKDS-7075	Control Panel Remote Adaptor	Page 1-21
BKDS-7090	Redundant Power Supply Unit	

BKDS-7023LR	Type-4D Switcher Control Panel	Page 1-20
Option	**Function name**	
BKDS-7001	Control Port Expansion Board	
BKDS-7030	Key Frame Control Panel Unit	Page 1-21
BKDS-7031	DME Control Panel Unit	Page 1-21
BKDS-7075	Control Panel Remote Adaptor	Page 1-21
BKDS-7090	Redundant Power Supply Unit	

1-1. DVS-M1000C

1. Except Plug-in Boards

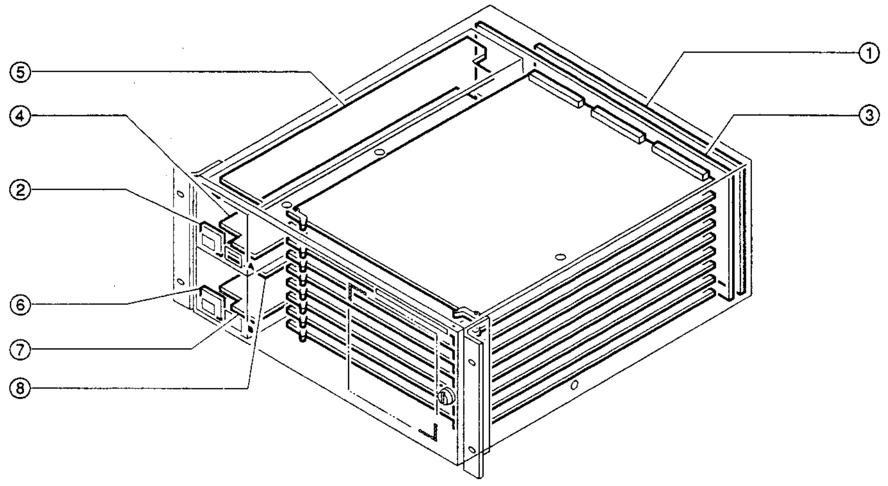

No.	Board name	Circuit function	Model name
1	CN-1140	Connector Board	DVS-M1000C
2	LE-156	LED Board	
3	MB-616	Mother Board	
4	RE-114	Power Supply AC-DC Board	
5	RE-115A	Power Supply DC-DC Board	
6	LE-156	LED Board	BKDS-M1690
7	RE-114	Power Supply AC-DC Board	
8	RE-115A	Power Supply DC-DC Board	

2. Plug-in Boards

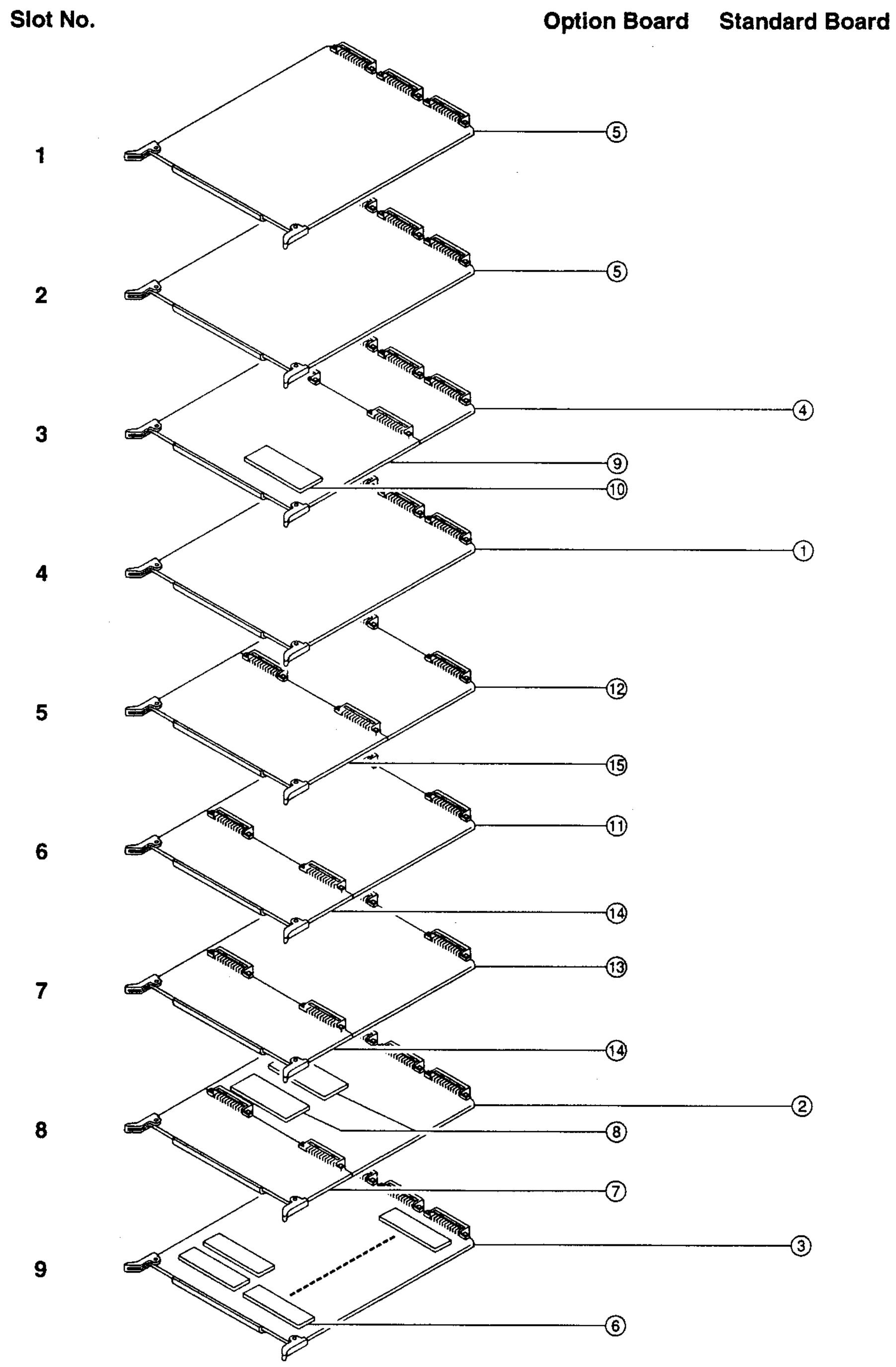

No.	Board name	Circuit function	Model name
1	CPU-156	System Control Board	DVS-M1000C
2	MIX-21	Video Mixer Board	
3	OUT-8	Output Processor Board	
4	XPT-5	Cross Point Board	
5	DI-22	12 Input Serial Digital Board	BKDS-7102
6	SD-34	Serial Digital Output Board	BKDS-7162
7	BD-26	Key Border Board	BKDS-7270
8	KPC-7	Keyer Expansion Board	BKDS-M1310
9	FM-41	Frame Memory Board	BKDS-M1441
10	MEM-71	Frame Memory Expansion Board	BKDS-M1442
11	APR-8	Audio Process Board	BKDS-M1810
12	AVD-3	A/V Demultiplex/Multiplex Board	
13	APR-8	Audio Process Board	BKDS-M1820
14	APR-9	Audio Process Board	
15	AVD-4	A/V Demultiplex/Multiplex Board	

1-2. BKDS-M1010

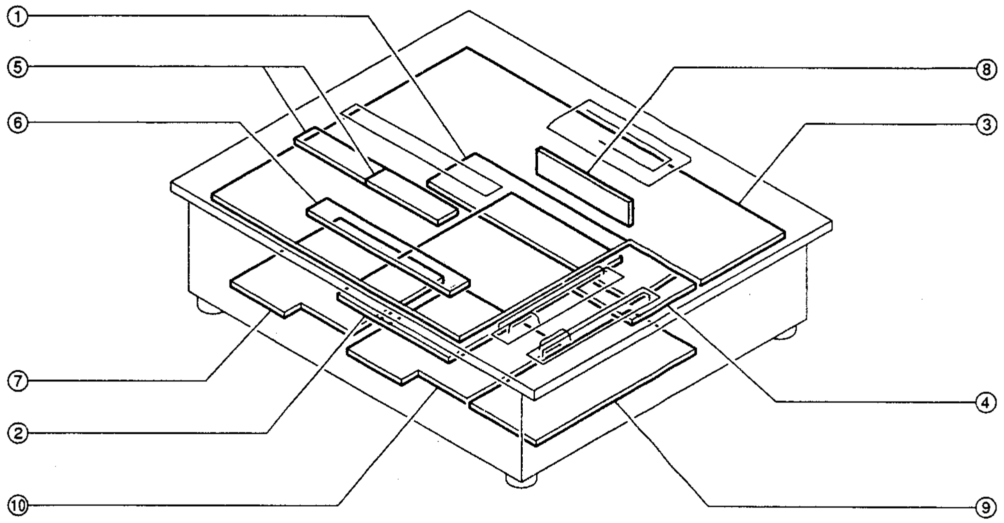

No.	Board name	Circuit function	Model name
1	CN-1197	Connector Board	BKDS-M1010
2	CPU-199	System Control Board	
3	KY-334	Switch Board	
4	KY-335	Switch Board	
5	LE-152	LED Board	
6	LE-153	LED Board	
7	RE-121	Power Supply Board	
8	VR-203	Rotary Encoder Board	
9	IF-533	Audio Fader Interface Board	BKDS-M1040
10	RE-121	Power Supply Board	BKDS-M1090

1-3. DVS-7000

1. Except Plug-in Boards

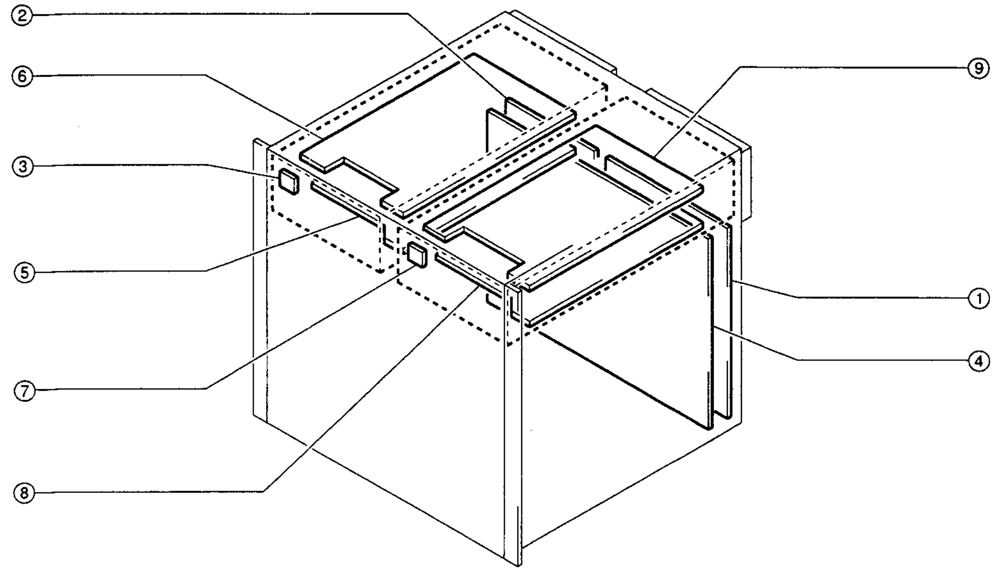

No.	Board name	Circuit function	Model name
1	CN-1145	Connector Board	DVS-7000
2	CN-1146	Connector Board	
3	LE-55	LED Board	
4	MB-618	Mother Board	
5	RE-109	Power Supply DC-DC Board	
6	RE-110	Power Supply DC-DC Board	
7	LE-55	LED Board	BKDS-7690
8	RE-109	Power Supply AC-DC Board	
9	RE-110	Power Supply DC-DC Board	

2. Plug-in Boards

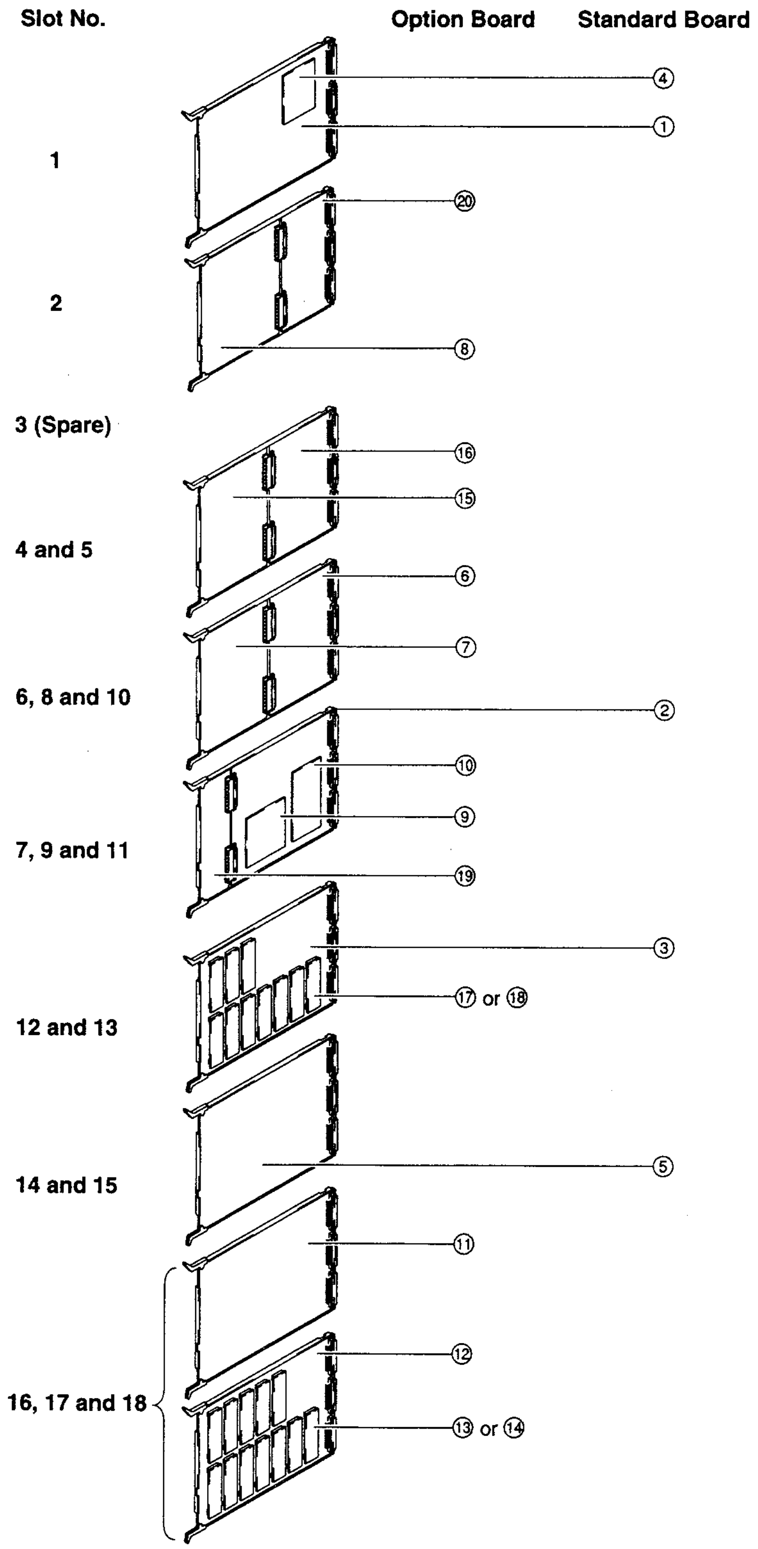

No.	Board name	Circuit function	Model name
1	CPU-192	System Control Board	DVS-7000
2	MIX-35	Video Mixer Board	
3	OUT-9	Output Processor Board	
4	RAM-18	CPU Expansion Board	
5	XPT-10	Cross Point Board	
6	CRK-10	Chromakey Board	BKDS-2031
7	CRK-11	Chromakey Upgrade Board	BKDS-2032
8	MY-66	Frame Memory Board	BKDS-2041
9	WKG-12	Enhanced Wipe Generator Board	BKDS-2070
10	UP-10	ME PVW Board	BKDS-7280
11	DI-22	12Input Serial Digital Board	BKDS-7102
12	ADC-21	Blank Input Adaptor Board	BKDS-7110
13	ADI-3	Analog Composite Input Board	BKDS-7111
14	DI-24	Serial Digital Input Board	BKDS-7112
15	ADC-22	Chromakey Analog Component Input Board	BKDS-7133
16	ENC-34	Encorder Board	
17	DA-94	Analog Composite Output Board	BKDS-7161
18	SD-34	Serial Digital Output Board	BKDS-7162
19	BD-26	Key Border Board	BKDS-7270
20	YC-59	Frame Memory Adaptor Board	BKDS-7445

1-5

1-4. BKDS-7011

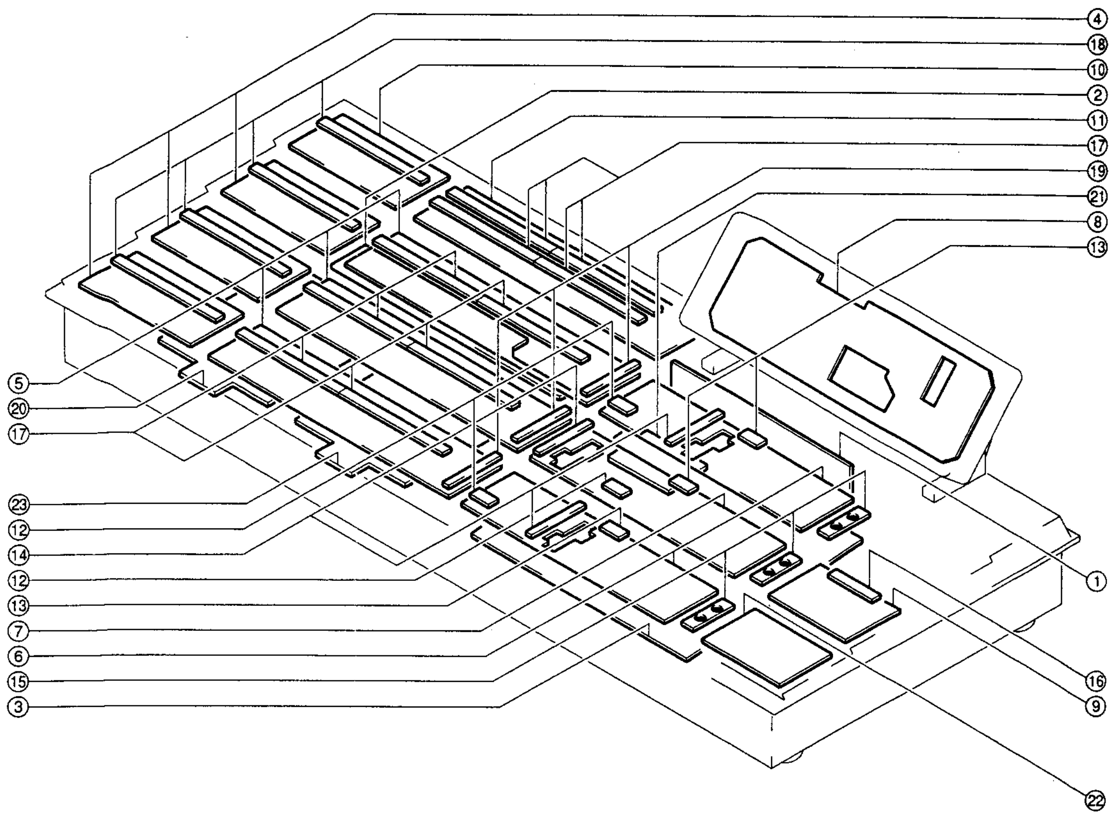

No.	Board name	Circuit function	Model name
1	CN-1143	Connector Board	BKDS-7011
2	CN-1148	Connector Board	
3	CPU-191	System Control Board	
4	KY-318A	Switch Board	
5	KY-319A	Switch Board	
6	KY-320	Switch Board	
7	KY-321	Switch Board	
8	KY-323	Switch Board	
9	KY-324	Switch Board	
10	KY-331	Switch Board	
11	KY-332	Switch Board	
12	LE-142	LED Board	
13	LE-143	LED Board	
14	LE-144	LED Board	
15	LE-145	LED Board	
16	LE-146	LED Board	
17	LE-147	LED Board	
18	LE-148	LED Board	
19	LE-150	LED Board	
20	RE-112	Power Supply Board	
21	IF-523	Control Port Expansion Board	BKDS-7001
22	KY-325	DSK Control Panel Unit	BKDS-7032
23	RE-112	Power Supply Board	BKDS-7090

1-5. BKDS-7012

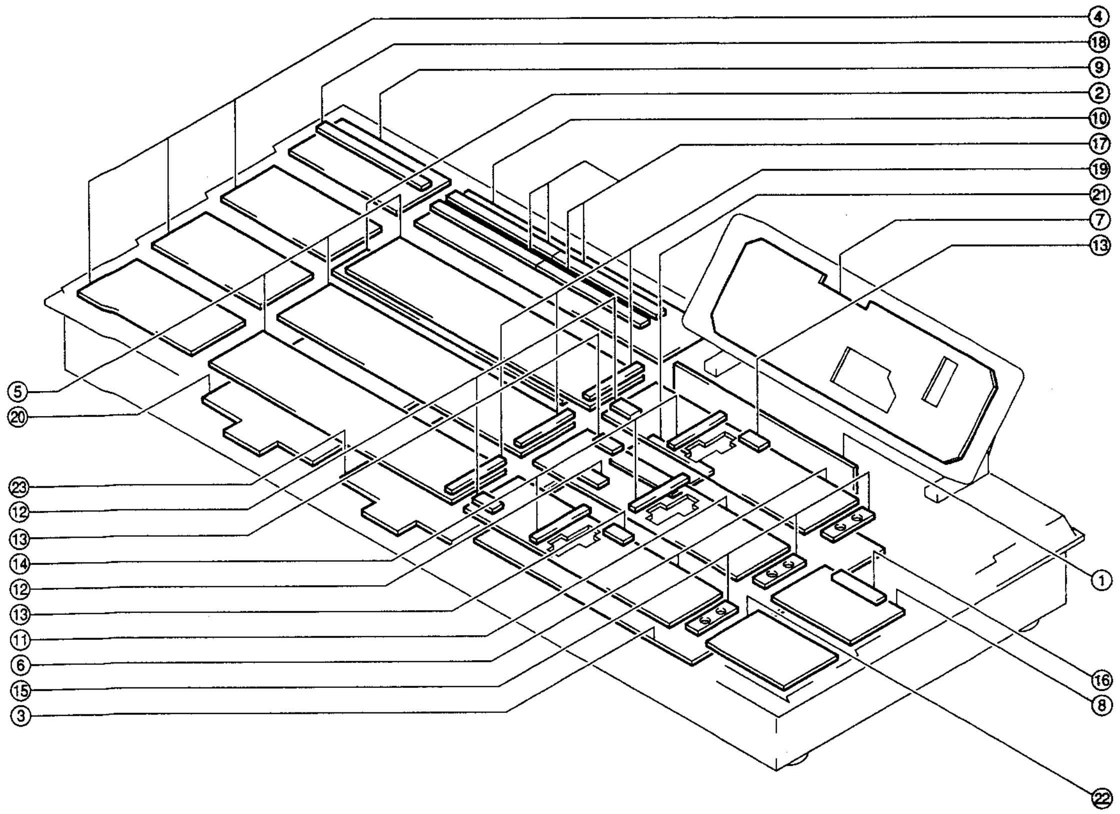

No.	Board name	Circuit function	Model name
1	CN-1143	Connector Board	BKDS-7012
2	CN-1148	Connector Board	
3	CPU-191	System Control Board	
4	KY-318B	Switch Board	
5	KY-319B	Switch Board	
6	KY-320	Switch Board	
7	KY-323	Switch Board	
8	KY-324	Switch Board	
9	KY-331	Switch Board	
10	KY-332	Switch Board	
11	KY-367	Switch Board	
12	LE-142	LED Board	
13	LE-143	LED Board	
14	LE-144	LED Board	
15	LE-145	LED Board	
16	LE-146	LED Board	
17	LE-147	LED Board	
18	LE-148	LED Board	
19	LE-150	LED Board	
20	RE-112	Power Supply Board	
21	IF-523	Control Port Expansion Board	BKDS-7001
22	KY-325	DSK Control Panel Unit	BKDS-7032
23	RE-112	Power Supply Board	BKDS-7090

1-6. BKDS-7021

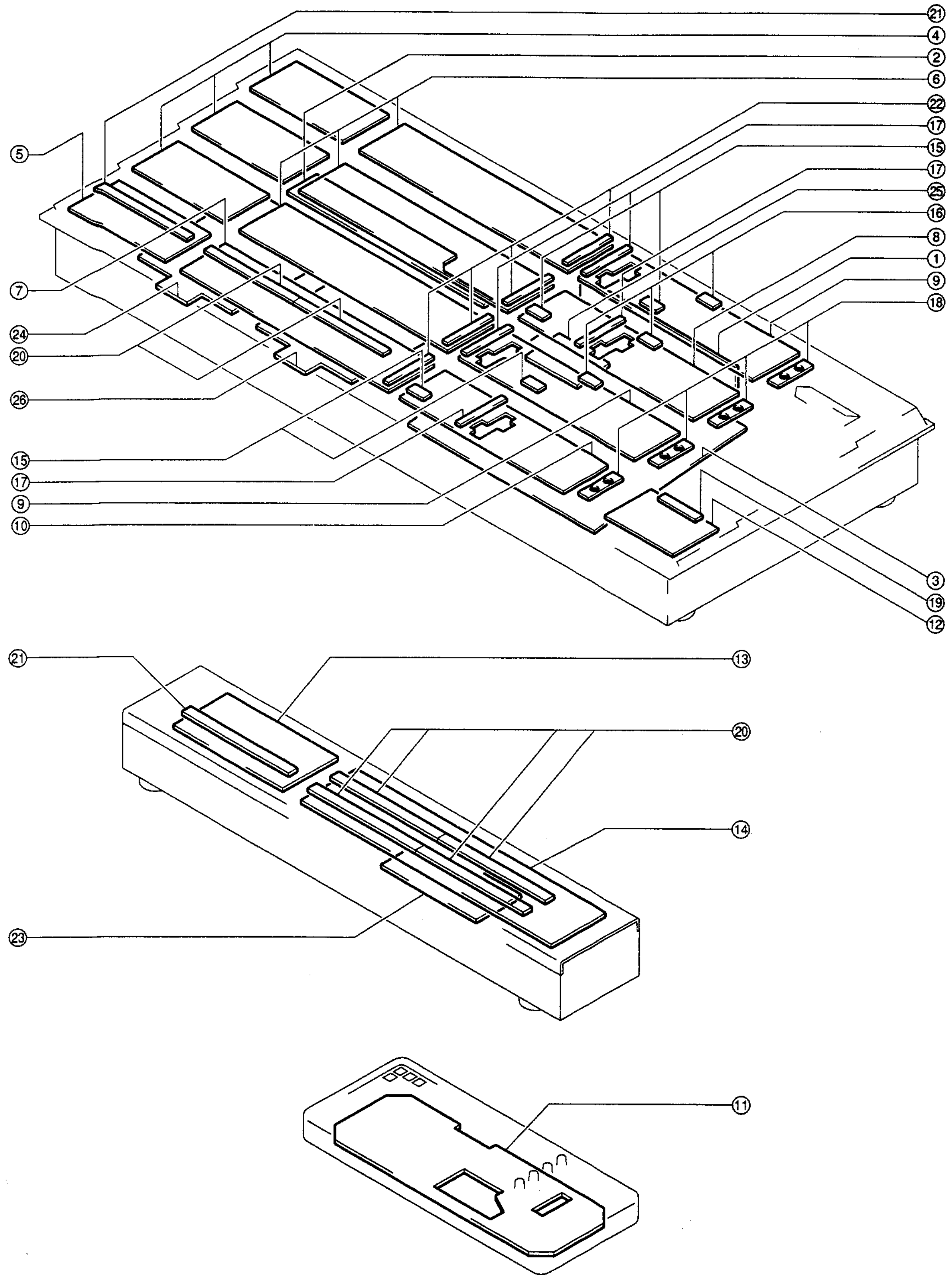

No.	Board name	Circuit function	Model name
1	CN-1143	Connector Board	BKDS-7021
2	CN-1148	Connector Board	
3	CPU-191	System Control Board	
4	KY-318B	Switch Board	
5	KY-318C	Switch Board	
6	KY-319B	Switch Board	
7	KY-319C	Switch Board	
8	KY-320	Switch Board	
9	KY-321	Switch Board	
10	KY-322	Switch Board	
11	KY-323	Switch Board	
12	KY-324	Switch Board	
13	KY-331	Switch Board	
14	KY-332	Switch Board	
15	LE-142	LED Board	
16	LE-143	LED Board	
17	LE-144	LED Board	
18	LE-145	LED Board	
19	LE-146	LED Board	
20	LE-147	LED Board	
21	LE-148	LED Board	
22	LE-150	LED Board	
23	PS-403	DC-DC Converter Board	
24	RE-112	Power Supply Board	
25	IF-523	Control Port Expansion Board	BKDS-7001
26	RE-112	Power Supply Board	BKDS-7090

1-7. BKDS-7022

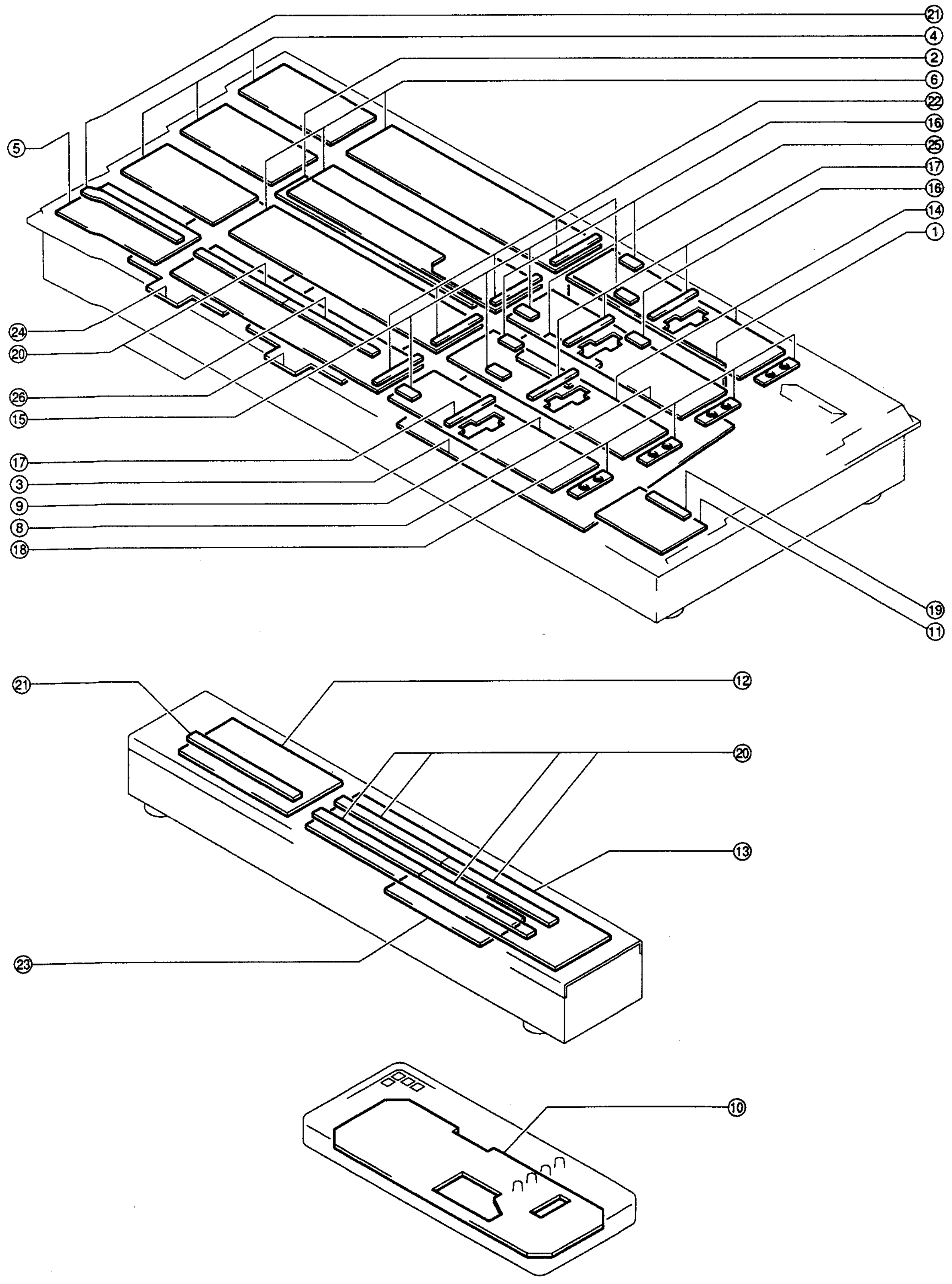

No.	Board name	Circuit function	Model name
1	CN-1143	Connector Board	BKDS-7022
2	CN-1148	Connector Board	
3	CPU-191	System Control Board	
4	KY-318B	Switch Board	
5	KY-318C	Switch Board	
6	KY-319B	Switch Board	
7	KY-319C	Switch Board	
8	KY-320	Switch Board	
9	KY-322	Switch Board	
10	KY-323	Switch Board	
11	KY-324	Switch Board	
12	KY-331	Switch Board	
13	KY-332	Switch Board	
14	KY-367	Switch Board	
15	LE-142	LED Board	
16	LE-143	LED Board	
17	LE-144	LED Board	
18	LE-145	LED Board	
19	LE-146	LED Board	
20	LE-147	LED Board	
21	LE-148	LED Board	
22	LE-150	LED Board	
23	PS-403	DC-DC Converter Board	
24	RE-112	Power Supply Board	
25	IF-523	Control Port Expansion Board	BKDS-7001
26	RE-112	Power Supply Board	BKDS-7090

1-9

1-8. BKDS-7023

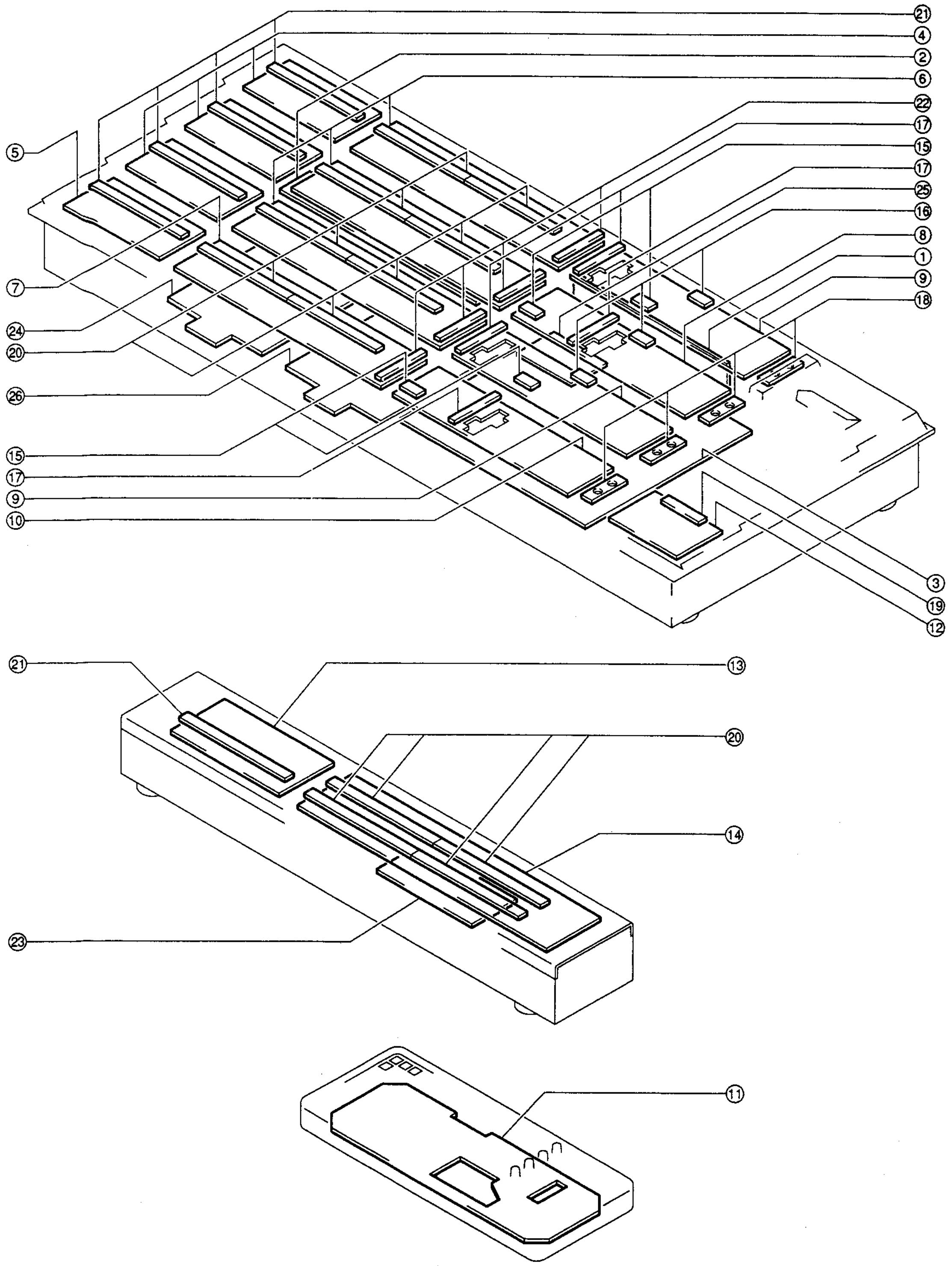

No.	Board name	Circuit function	Model name
1	CN-1143	Connector Board	BKDS-7023
2	CN-1148	Connector Board	
3	CPU-191	System Control Board	
4	KY-318A	Switch Board	
5	KY-318C	Switch Board	
6	KY-319A	Switch Board	
7	KY-319C	Switch Board	
8	KY-320	Switch Board	
9	KY-321	Switch Board	
10	KY-322	Switch Board	
11	KY-323	Switch Board	
12	KY-324	Switch Board	
13	KY-331	Switch Board	
14	KY-332	Switch Board	
15	LE-142	LED Board	
16	LE-143	LED Board	
17	LE-144	LED Board	
18	LE-145	LED Board	
19	LE-146	LED Board	
20	LE-147	LED Board	
21	LE-148	LED Board	
22	LE-150	LED Board	
23	PS-403	DC-DC Converter Board	
24	RE-112	Power Supply Board	
25	IF-523	Control Port Expansion Board	BKDS-7001
26	RE-112	Power Supply Board	BKDS-7090

1-9. BKDS-7011R

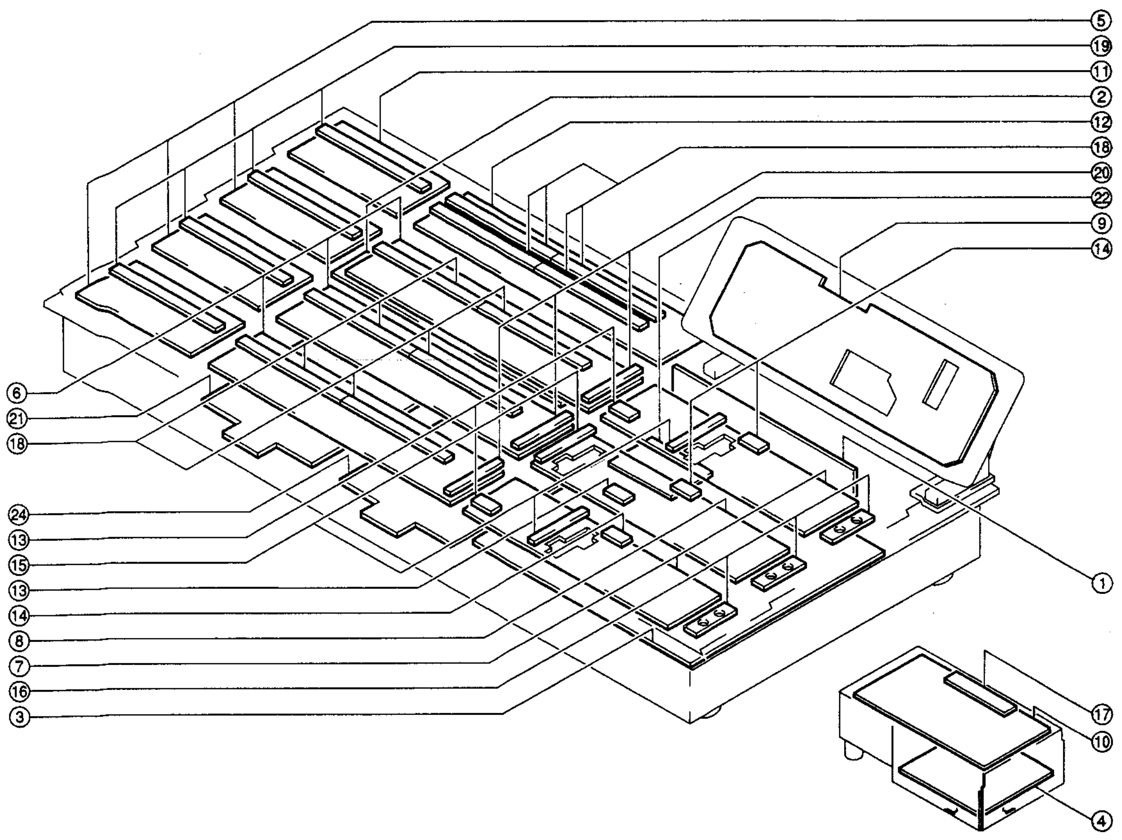

No.	Board name	Circuit function	Model name
1	CN-1143	Connector Board	BKDS-7011R
2	CN-1148	Connector Board	
3	CPU-191	System Control Board	
4	IF-629	Interface Board	
5	KY-318A	Switch Board	
6	KY-319A	Switch Board	
7	KY-320	Switch Board	
8	KY-321	Switch Board	
9	KY-323	Switch Board	
10	KY-324	Switch Board	
11	KY-331	Switch Board	
12	KY-332	Switch Board	
13	LE-142	LED Board	
14	LE-143	LED Board	
15	LE-144	LED Board	
16	LE-145	LED Board	
17	LE-146	LED Board	
18	LE-147	LED Board	
19	LE-148	LED Board	
20	LE-150	LED Board	
21	RE-112	Power Supply Board	
22	IF-523	Control Port Expansion Board	BKDS-7001
23	RE-112	Power Supply Board	BKDS-7090

1-11

1-10. BKDS-7012R

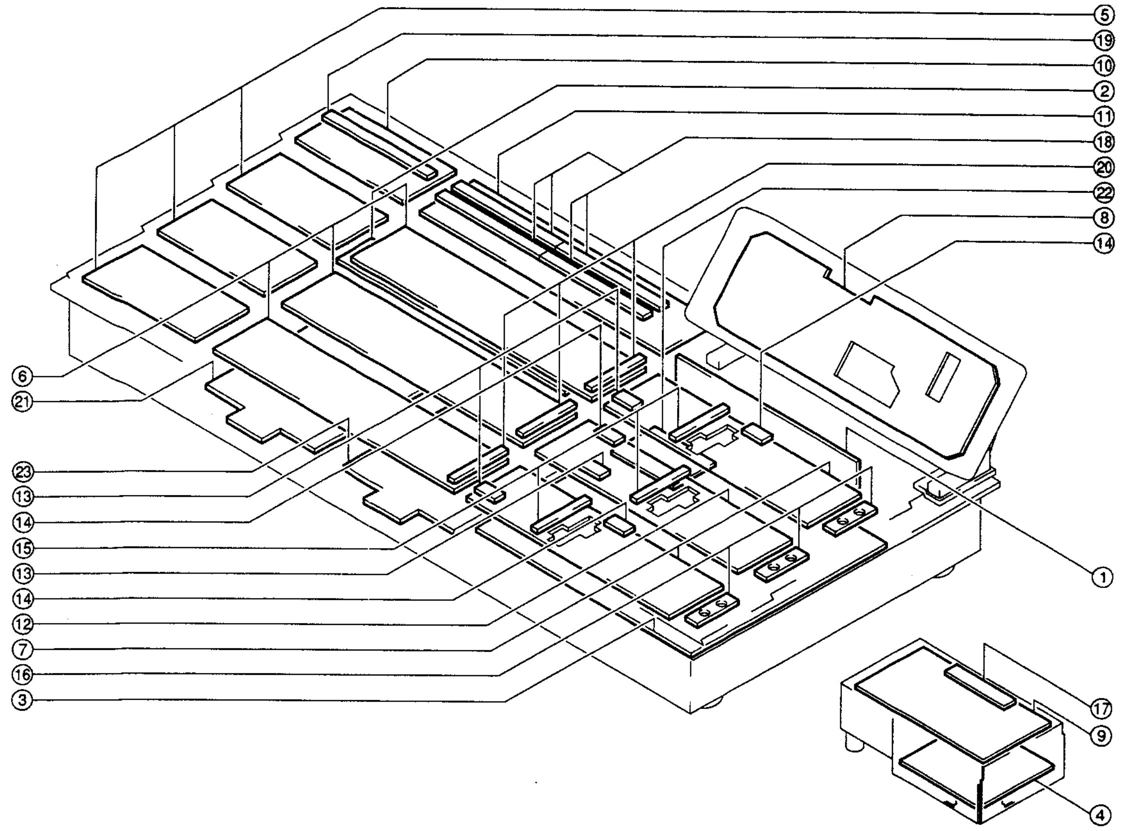

No.	Board name	Circuit function	Model name
1	CN-1143	Connector Board	BKDS-7012R
2	CN-1148	Connector Board	
3	CPU-191	System Control Board	
4	IF-629	Interface Board	
5	KY-318B	Switch Board	
6	KY-319B	Switch Board	
7	KY-320	Switch Board	
8	KY-323	Switch Board	
9	KY-324	Switch Board	
10	KY-331	Switch Board	
11	KY-332	Switch Board	
12	KY-367	Switch Board	
13	LE-142	LED Board	
14	LE-143	LED Board	
15	LE-144	LED Board	
16	LE-145	LED Board	
17	LE-146	LED Board	
18	LE-147	LED Board	
19	LE-148	LED Board	
20	LE-150	LED Board	
21	RE-112	Power Supply Board	
22	IF-523	Control Port Expansion Board	BKDS-7001
23	RE-112	Power Supply Board	BKDS-7090

1-11. BKDS-7021R

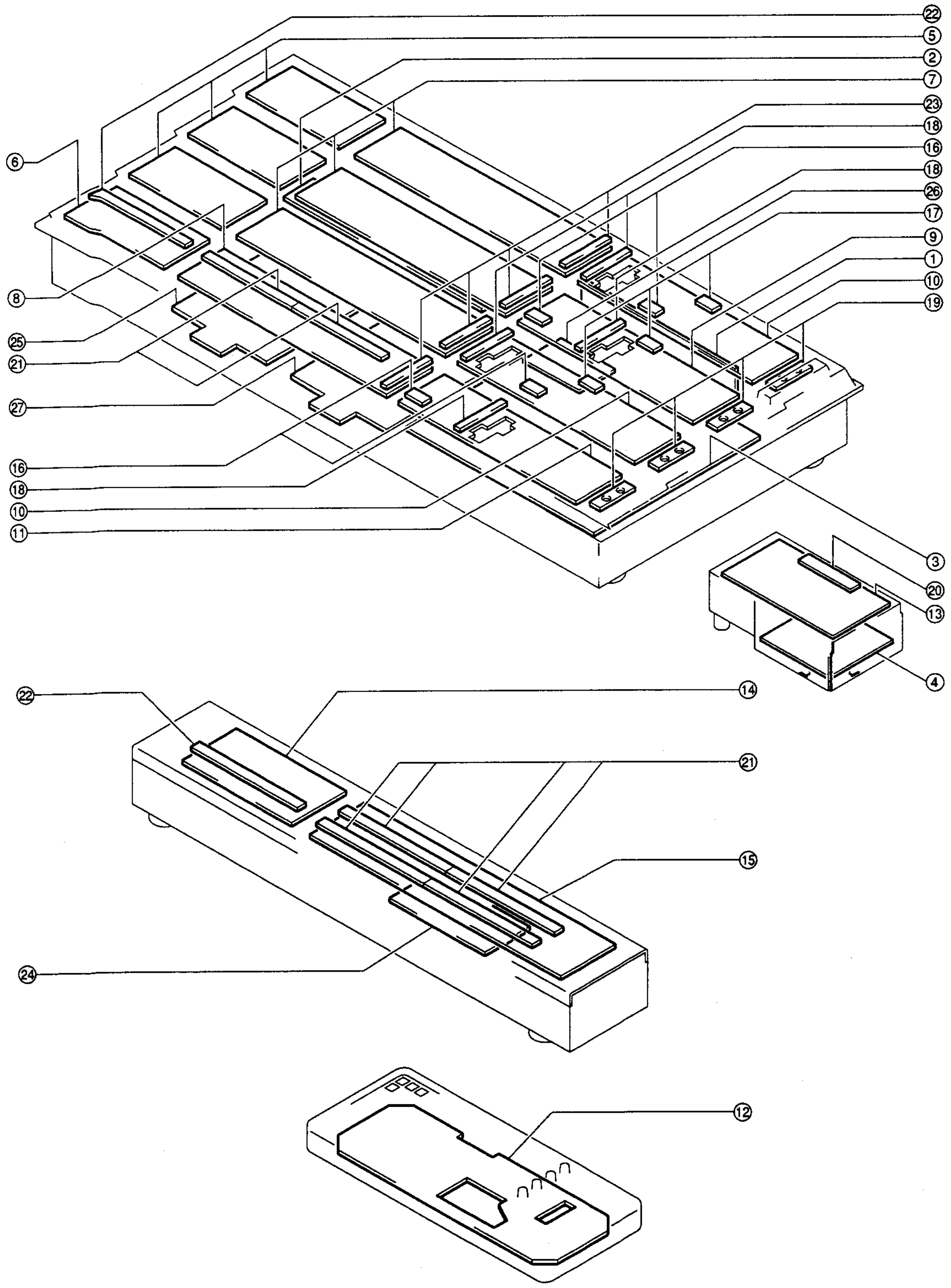

No.	Board name	Circuit function	Model name
1	CN-1143	Connector Board	BKDS-7021R
2	CN-1148	Connector Board	
3	CPU-191	System Control Board	
4	IF-629	Interface Board	
5	KY-318B	Switch Board	
6	KY-318C	Switch Board	
7	KY-319B	Switch Board	
8	KY-319C	Switch Board	
9	KY-320	Switch Board	
10	KY-321	Switch Board	
11	KY-322	Switch Board	
12	KY-323	Switch Board	
13	KY-324	Switch Board	
14	KY-331	Switch Board	
15	KY-332	Switch Board	
16	LE-142	LED Board	
17	LE-143	LED Board	
18	LE-144	LED Board	
19	LE-145	LED Board	
20	LE-146	LED Board	
21	LE-147	LED Board	
22	LE-148	LED Board	
23	LE-150	LED Board	
24	PS-403	DC-DC Converter Board	
25	RE-112	Power Supply Board	
26	IF-523	Control Port Expansion Board	BKDS-7001
27	RE-112	Power Supply Board	BKDS-7090

1-13

1-12. BKDS-7022R

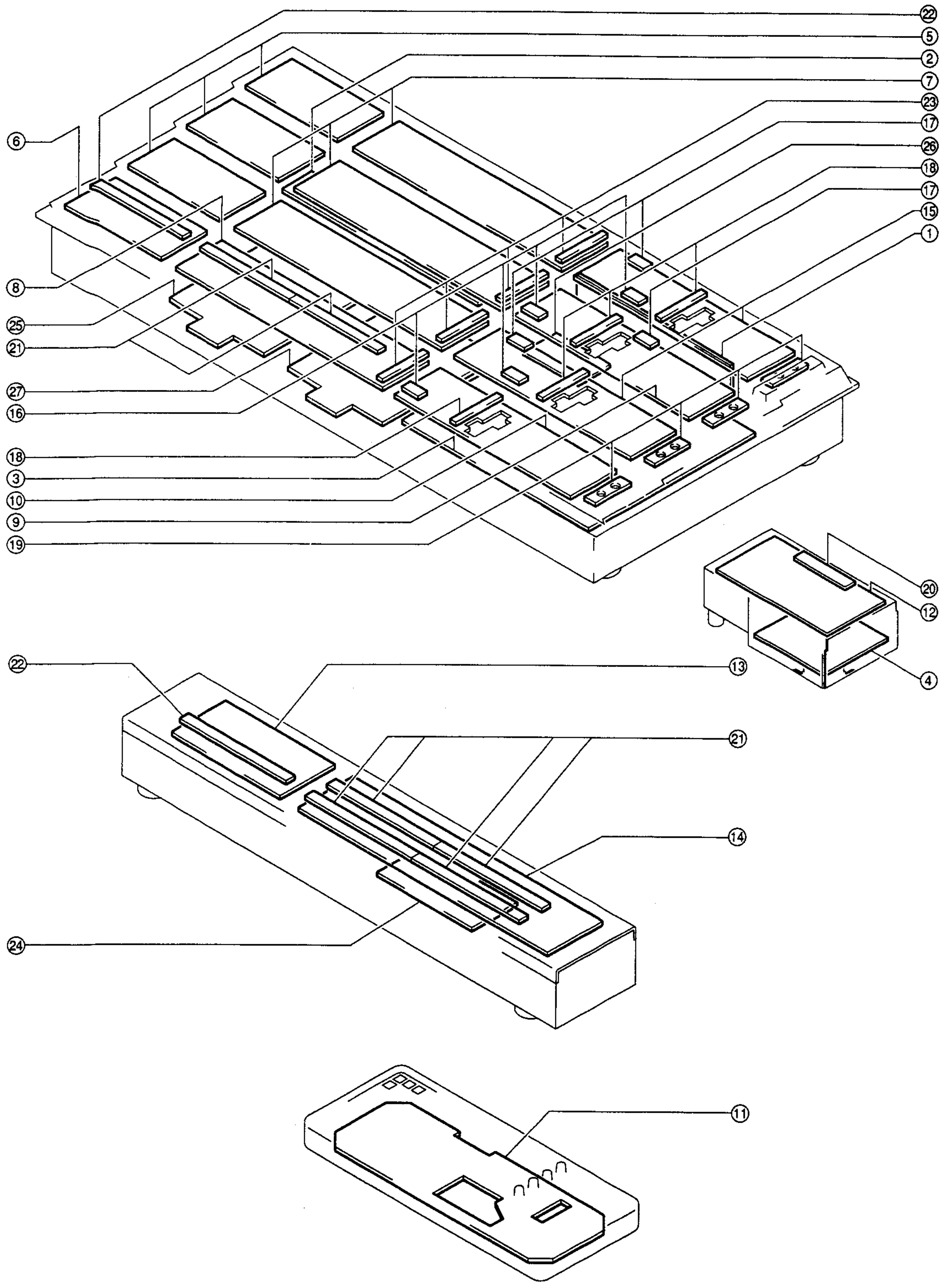

No.	Board name	Circuit function	Model name
1	CN-1143	Connector Board	BKDS-7022R
2	CN-1148	Connector Board	
3	CPU-191	System Control Board	
4	IF-629	Interface Board	
5	KY-318B	Switch Board	
6	KY-318C	Switch Board	
7	KY-319B	Switch Board	
8	KY-319C	Switch Board	
9	KY-320	Switch Board	
10	KY-322	Switch Board	
11	KY-323	Switch Board	
12	KY-324	Switch Board	
13	KY-331	Switch Board	
14	KY-332	Switch Board	
15	KY-367	Switch Board	
16	LE-142	LED Board	
17	LE-143	LED Board	
18	LE-144	LED Board	
19	LE-145	LED Board	
20	LE-146	LED Board	
21	LE-147	LED Board	
22	LE-148	LED Board	
23	LE-150	LED Board	
24	PS-403	DC-DC Converter Board	
25	RE-112	Power Supply Board	
26	IF-523	Control Port Expansion Board	BKDS-7001
27	RE-112	Power Supply Board	BKDS-7090

1-13. BKDS-7023R

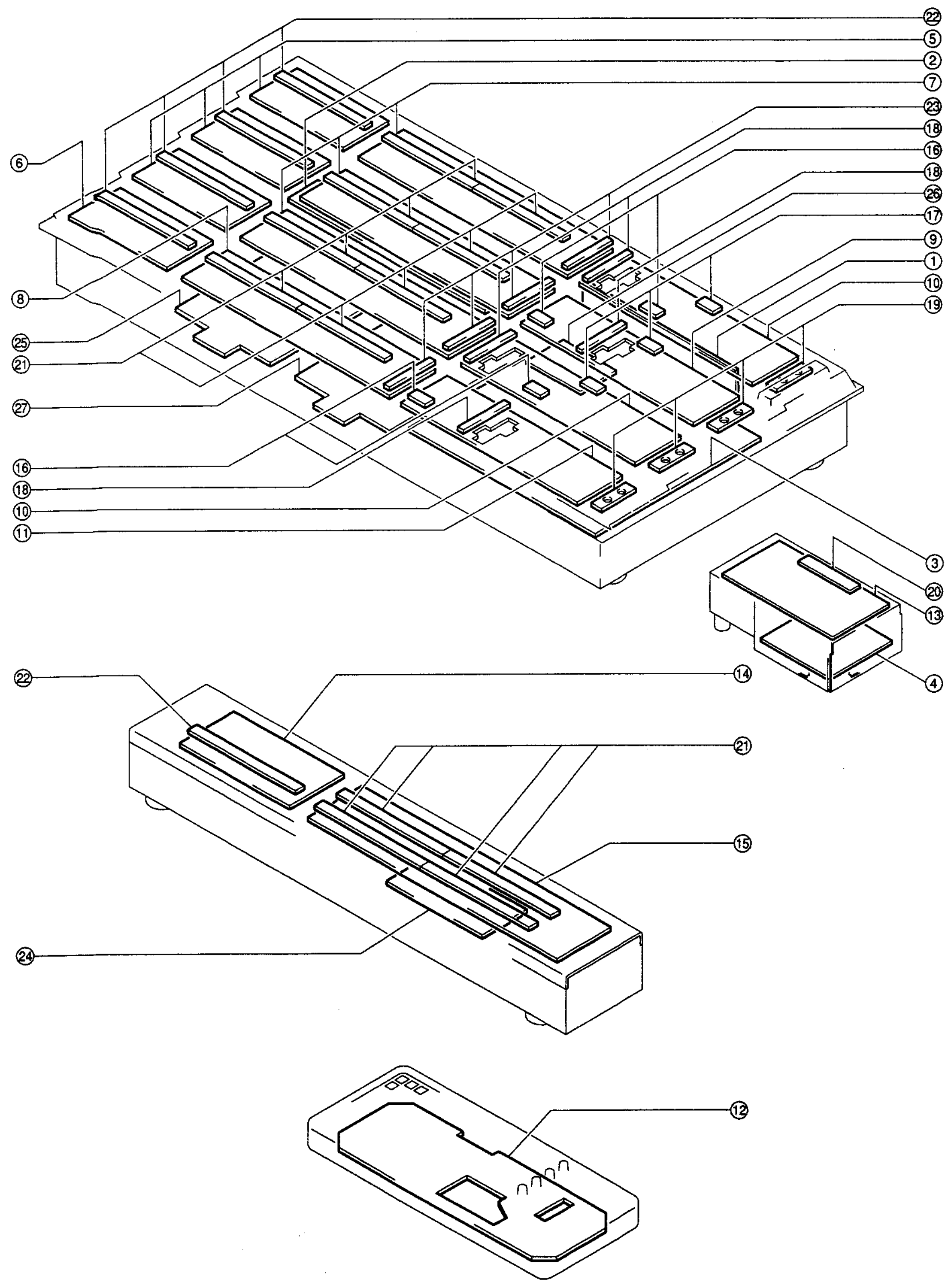

No.	Board name	Circuit function	Model name
1	CN-1143	Connector Board	BKDS-7023R
2	CN-1148	Connector Board	
3	CPU-191	System Control Board	
4	IF-629	Interface Board	
5	KY-318A	Switch Board	
6	KY-318C	Switch Board	
7	KY-319A	Switch Board	
8	KY-319C	Switch Board	
9	KY-320	Switch Board	
10	KY-321	Switch Board	
11	KY-322	Switch Board	
12	KY-323	Switch Board	
13	KY-324	Switch Board	
14	KY-331	Switch Board	
15	KY-332	Switch Board	
16	LE-142	LED Board	
17	LE-143	LED Board	
18	LE-144	LED Board	
19	LE-145	LED Board	
20	LE-146	LED Board	
21	LE-147	LED Board	
22	LE-148	LED Board	
23	LE-150	LED Board	
24	PS-403	DC-DC Converter Board	
25	RE-112	Power Supply Board	
26	IF-523	Control Port Expansion Board	BKDS-7001
27	RE-112	Power Supply Board	BKDS-7090

1-15

1-14. BKDS-7011LR

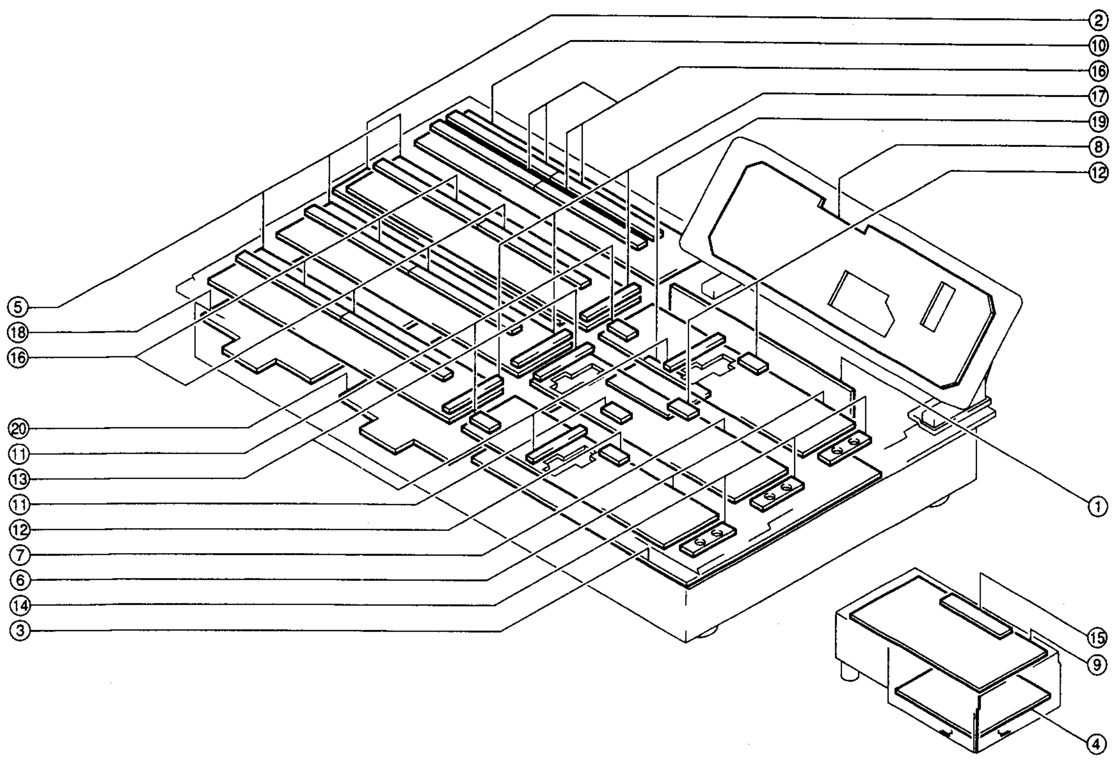

No.	Board name	Circuit function	Model name
1	CN-1143	Connector Board	BKDS-7011LR
2	CN-1148	Connector Board	
3	CPU-191	System Control Board	
4	IF-629	Interface Board	
5	KY-319A	Switch Board	
6	KY-320	Switch Board	
7	KY-321	Switch Board	
8	KY-323	Switch Board	
9	KY-324	Switch Board	
10	KY-332	Switch Board	
11	LE-142	LED Board	
12	LE-143	LED Board	
13	LE-144	LED Board	
14	LE-145	LED Board	
15	LE-146	LED Board	
16	LE-147	LED Board	
17	LE-150	LED Board	
18	RE-112	Power Supply Board	
19	IF-523	Control Port Expansion Board	BKDS-7001
20	RE-112	Power Supply Board	BKDS-7090

1-15. BKDS-7012LR

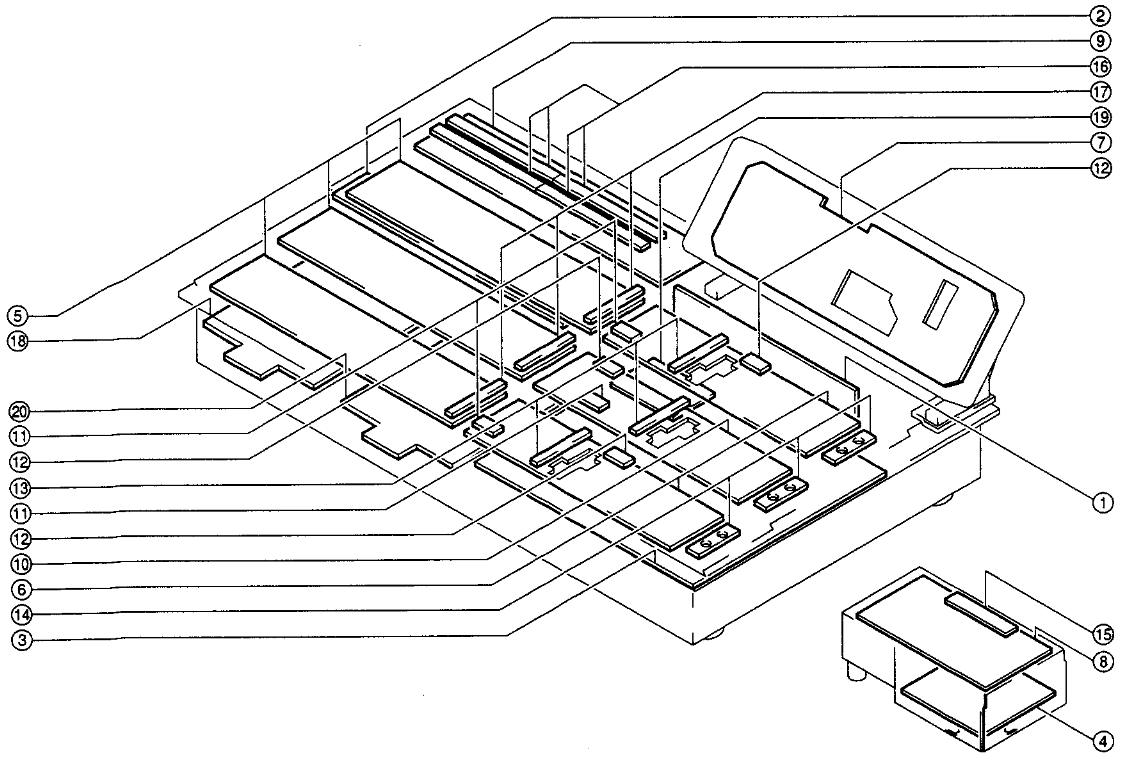

No.	Board name	Circuit function	Model name
1	CN-1143	Connector Board	BKDS-7012LR
2	CN-1148	Connector Board	
3	CPU-191	System Control Board	
4	IF-629	Interface Board	
5	KY-319B	Switch Board	
6	KY-320	Switch Board	
7	KY-323	Switch Board	
8	KY-324	Switch Board	
9	KY-332	Switch Board	
10	KY-367	Switch Board	
11	LE-142	LED Board	
12	LE-143	LED Board	
13	LE-144	LED Board	
14	LE-145	LED Board	
15	LE-146	LED Board	
16	LE-147	LED Board	
17	LE-150	LED Board	
18	RE-112	Power Supply Board	
19	IF-523	Control Port Expansion Board	BKDS-7001
20	RE-112	Power Supply Board	BKDS-7090

1-17

1-16. BKDS-7021LR

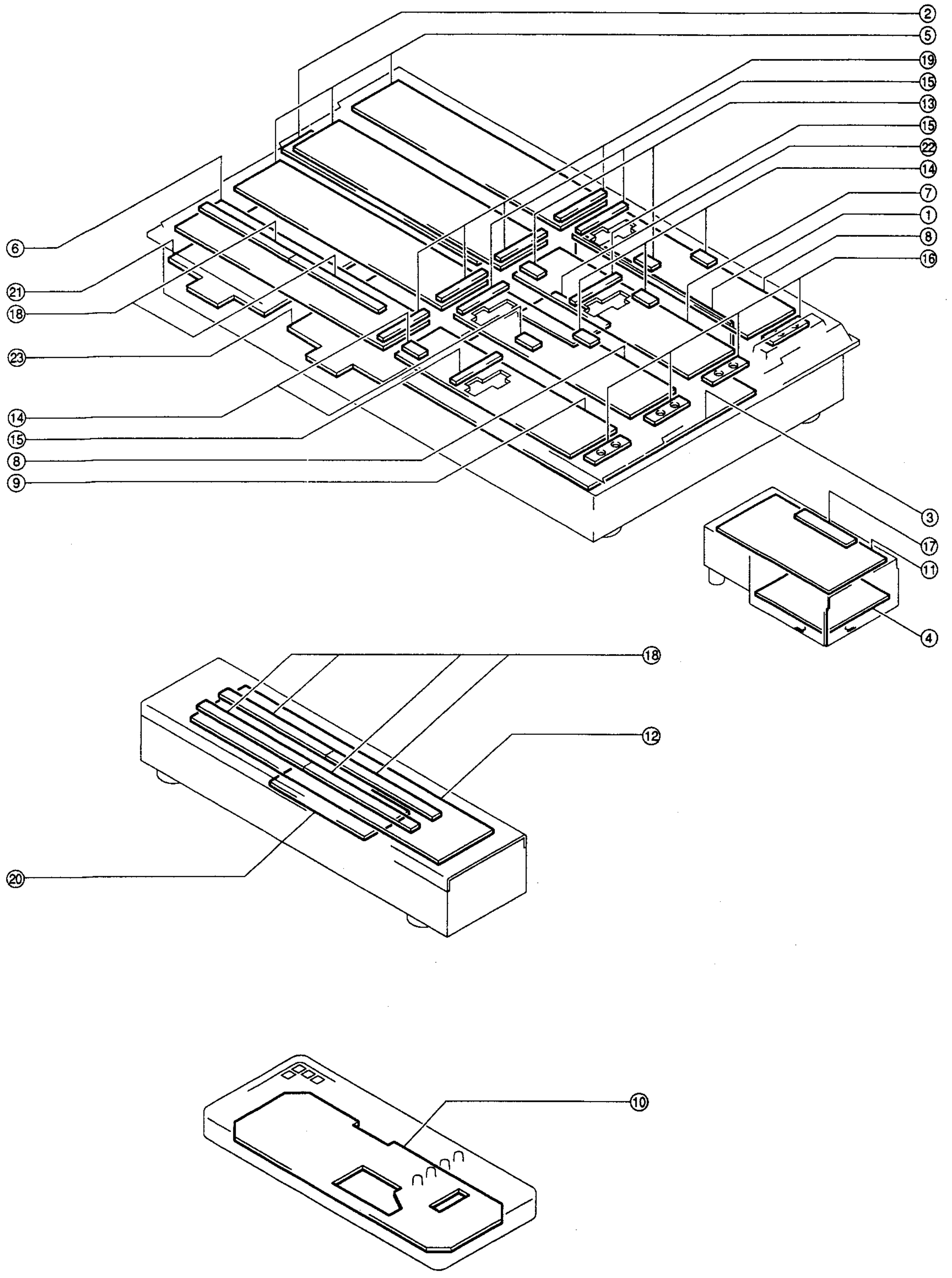

No.	Board name	Circuit function	Model name
1	CN-1143	Connector Board	BKDS-7021LR
2	CN-1148	Connector Board	
3	CPU-191	System Control Board	
4	IF-629	Interface Board	
5	KY-319B	Switch Board	
6	KY-319C	Switch Board	
7	KY-320	Switch Board	
8	KY-321	Switch Board	
9	KY-322	Switch Board	
10	KY-323	Switch Board	
11	KY-324	Switch Board	
12	KY-332	Switch Board	
13	LE-142	LED Board	
14	LE-143	LED Board	
15	LE-144	LED Board	
16	LE-145	LED Board	
17	LE-146	LED Board	
18	LE-147	LED Board	
19	LE-150	LED Board	
20	PS-403	DC-DC Converter Board	
21	RE-112	Power Supply Board	
22	IF-523	Control Port Expansion Board	BKDS-7001
23	RE-112	Power Supply Board	BKDS-7090

1-17. BKDS-7022LR

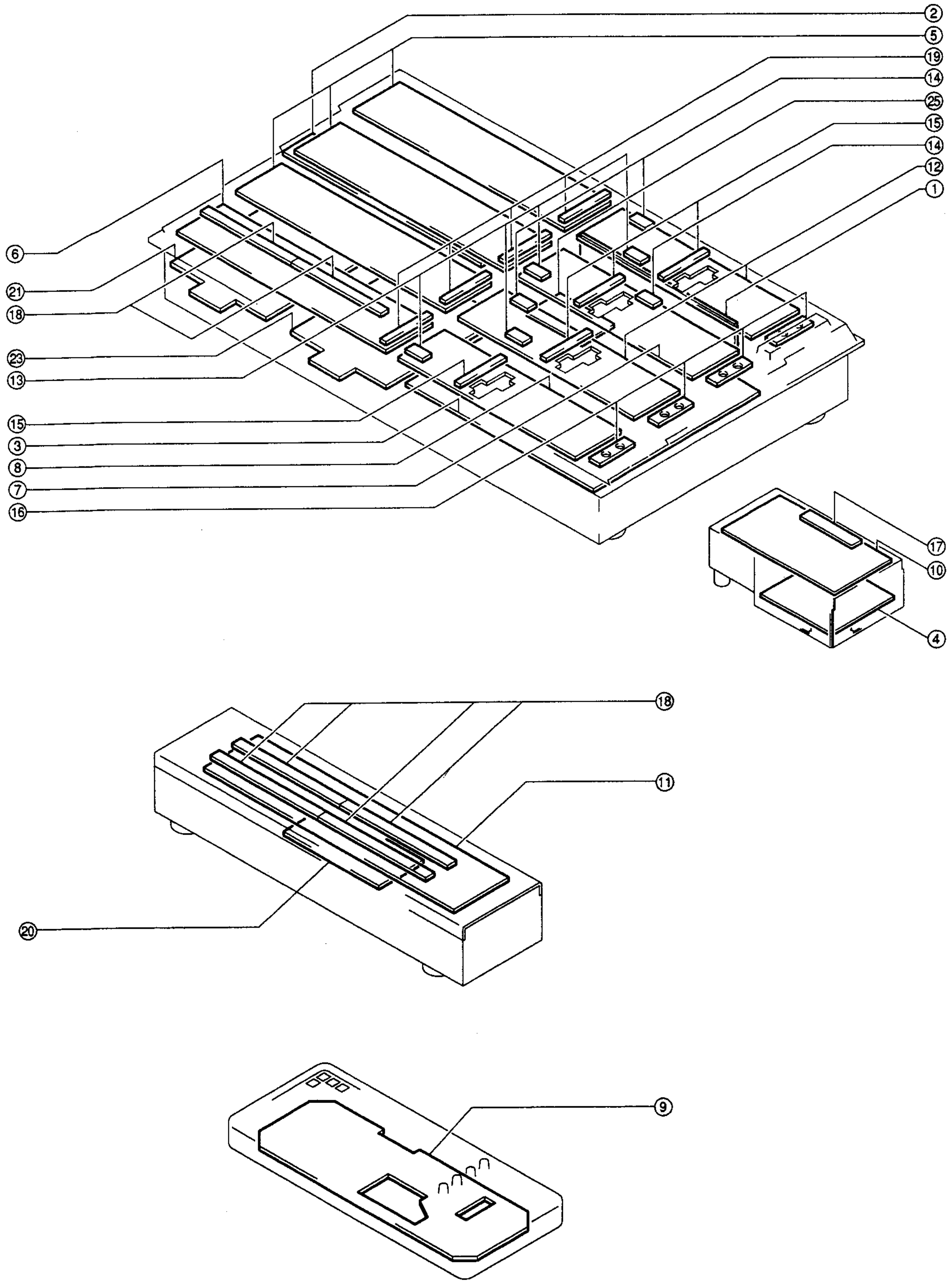

No.	Board name	Circuit function	Model name
1	CN-1143	Connector Board	BKDS-7022LR
2	CN-1148	Connector Board	
3	CPU-191	System Control Board	
4	IF-629	Interface Board	
5	KY-319B	Switch Board	
6	KY-319C	Switch Board	
7	KY-320	Switch Board	
8	KY-322	Switch Board	
9	KY-323	Switch Board	
10	KY-324	Switch Board	
11	KY-332	Switch Board	
12	KY-367	Switch Board	
13	LE-142	LED Board	
14	LE-143	LED Board	
15	LE-144	LED Board	
16	LE-145	LED Board	
17	LE-146	LED Board	
18	LE-147	LED Board	
19	LE-150	LED Board	
20	PS-403	DC-DC Converter Board	
21	RE-112	Power Supply Board	
22	IF-523	Control Port Expansion Board	BKDS-7001
23	RE-112	Power Supply Board	BKDS-7090

1-19

1-18. BKDS-7023LR

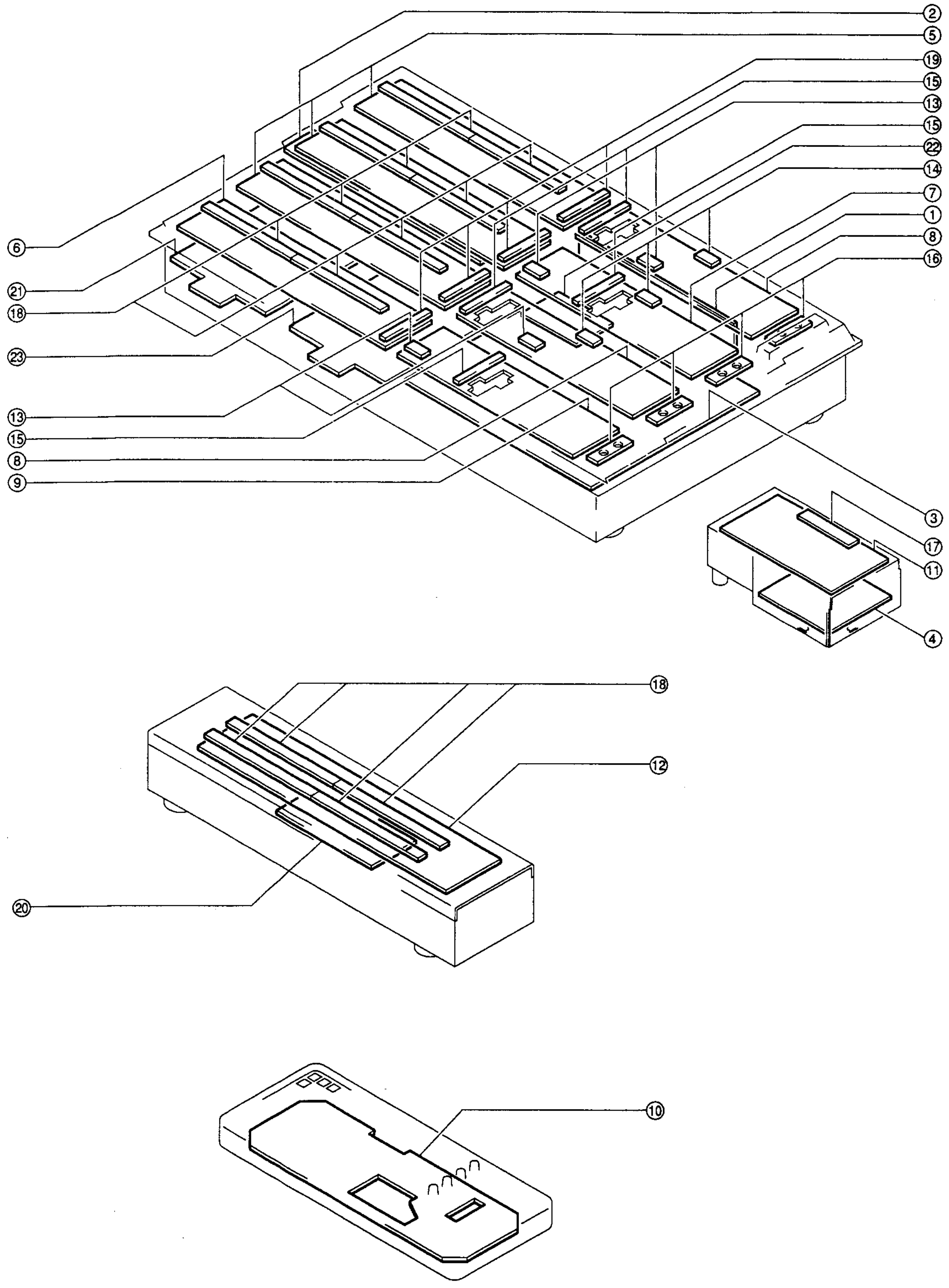

No.	Board name	Circuit function	Model name
1	CN-1143	Connector Board	BKDS-7023LR
2	CN-1148	Connector Board	
3	CPU-191	System Control Board	
4	IF-629	Interface Board	
5	KY-319A	Switch Board	
6	KY-319C	Switch Board	
7	KY-320	Switch Board	
8	KY-321	Switch Board	
9	KY-322	Switch Board	
10	KY-323	Switch Board	
11	KY-324	Switch Board	
12	KY-332	Switch Board	
13	LE-142	LED Board	
14	LE-143	LED Board	
15	LE-144	LED Board	
16	LE-145	LED Board	
17	LE-146	LED Board	
18	LE-147	LED Board	
19	LE-150	LED Board	
20	PS-403	DC-DC Converter Board	
21	RE-112	Power Supply Board	
22	IF-523	Control Port Expansion Board	BKDS-7001
23	RE-112	Power Supply Board	BKDS-7090

1-20

1-19. BKDS-7030/7031/7075

BKDS-7030

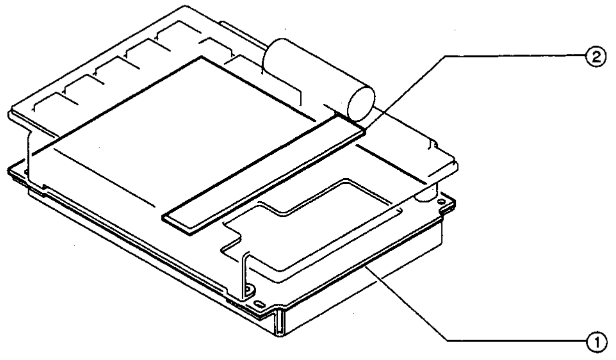

BKDS-7031

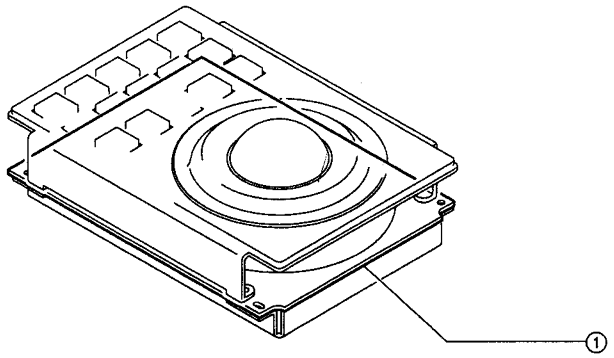

BKDS-7075

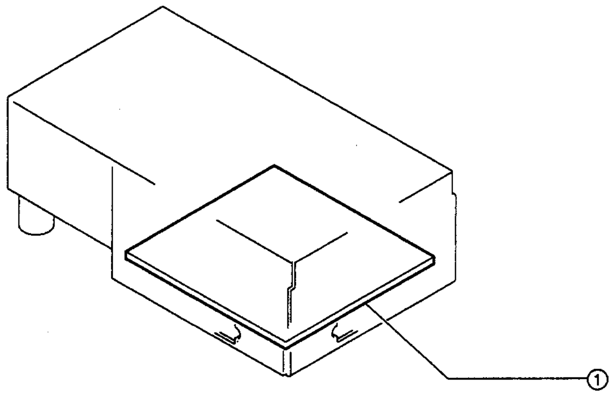

BKDS-7030

No.	Board name	Circuit function	Model name
1	KY-328	Switch Board	BKDS-7030
2	LE-144	LED Board	

BKDS-7031

No.	Board name	Circuit function	Model name
1	KY-329	Switch Board	BKDS-7031

BKDS-7075

No.	Board name	Circuit function	Model name
1	IF-629	Interface Board	BKDS-7075

1-20. DMK-7000

1. Except Plug-in Boards

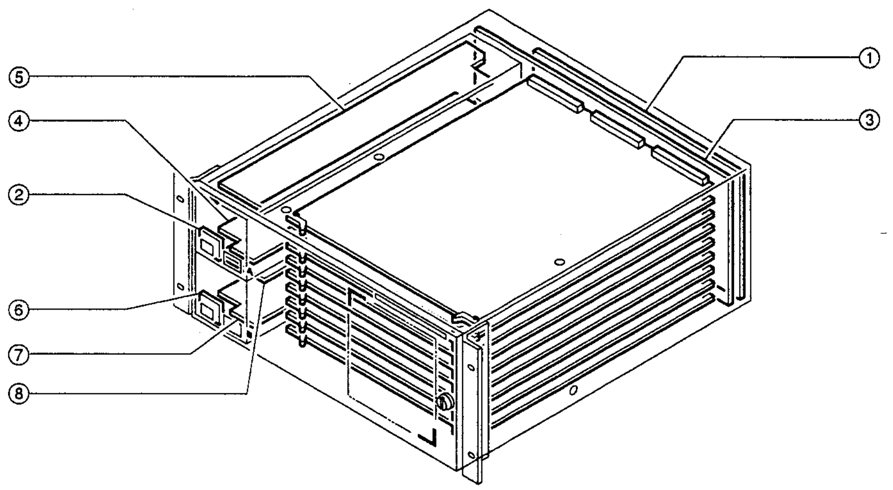

No.	Board name	Circuit function	Model name
1	CN-1171	Connector Board	DMK-7000
2	LE-156	LED Board	
3	MB-622	Mother Board	
4	RE-114	Power Supply AC-DC Board	
5	RE-115B	Power Supply DC-DC Board	
6	LE-156	LED Board	BKDS-7691
7	RE-114	Power Supply AC-DC Board	
8	RE-115B	Power Supply DC-DC Board	

2. Plug-in Boards

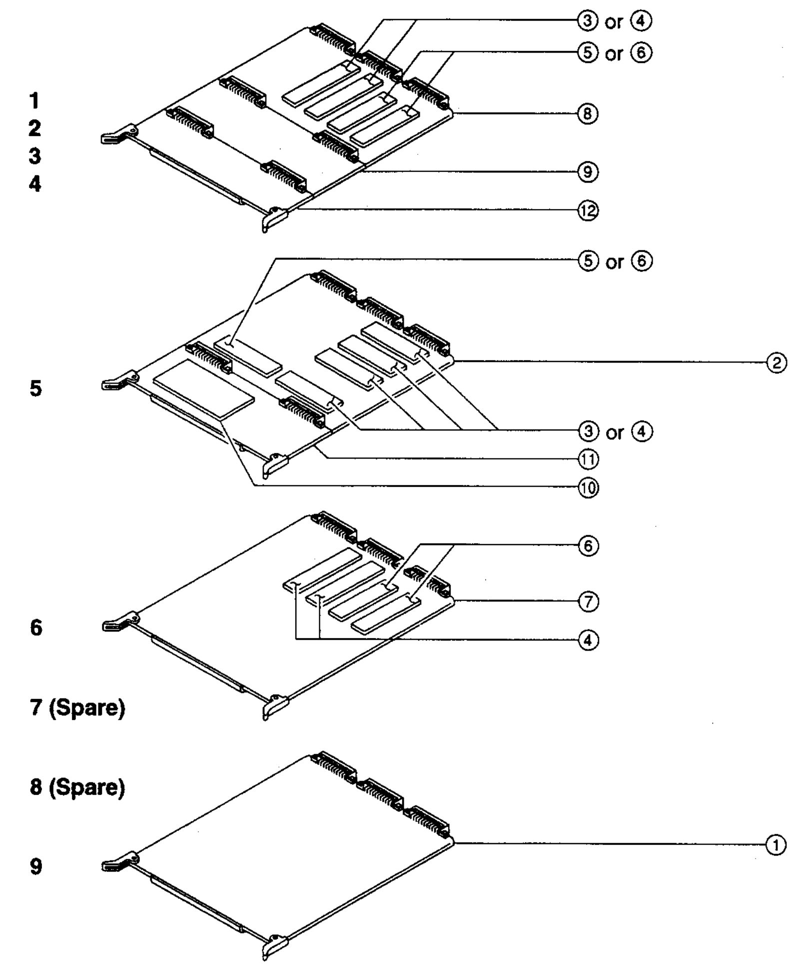

No.	Board name	Circuit function	Model name
1	CPU-192	System Control Board	DMK-7000
2	XPT-8	Cross Point Board	
3	ADI-3	Analog Composite Input Board	BKDS-7111
4	DI-24	Serial Digital Input Board	BKDS-7112
5	DA-94	Analog Composite Output Board	BKDS-7161
6	SD-34	Serial Digital Output Board	BKDS-7162
7	SDI-9	DME Interface Board	BKDS-7180
8	MIX-24	Linear Keyer Board	BKDS-7300
9	KPC-8	Luminance Keyer/Border Board	BKDS-7320
10	DEC-85	Color Vector Keyer Board	BKDS-7430
11	KPC-10	Luminance Keyer/Border Board	
12	MEM-67	Frame Memory Board	BKDS-7443

1-21. BKDS-7060

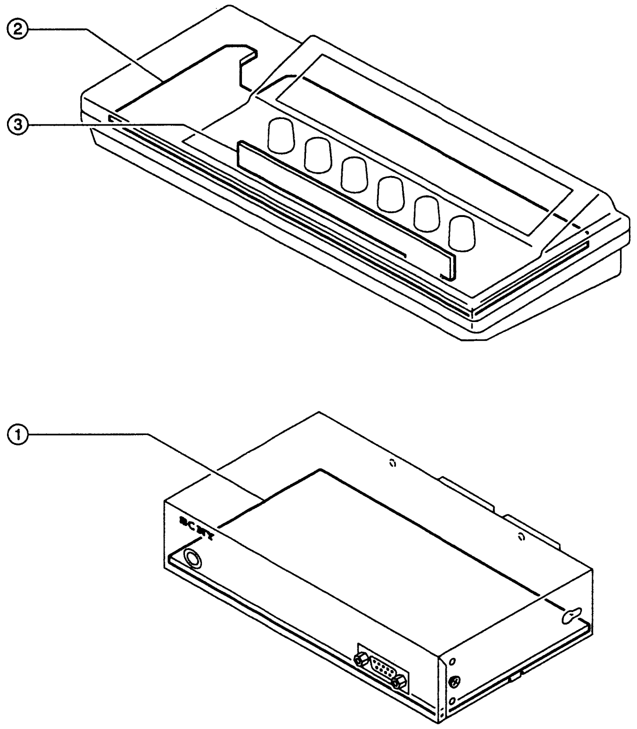

No.	Board name	Circuit function	Model name
1	CN-1295	Connector Board	BKDS-7060
2	CPU-198	System Control Board	
3	VR-222	Rotary Encoder Board	

1-23

Section 2
Overall Block Diagrams & Frame Wirings

DVS-M1000C	Digital Master Switcher	**Page 2-2**
BKDS-M1010	Master Switcher Control Panel	**Page 2-4**
DVS-7000	Digital Video Switcher	**Page 2-8**
BKDS-7011/7012	Type-3D Switcher Control Panel	**Page 2-12**
BKDS-7021/7022/7023	Type-4D Switcher Control Panel	**Page 2-24**
BKDS-701xR/70xLR	Type-3D Switcher Control Panel	**Page 2-37**
BKDS-702xR/702xLR	Type-4D Switcher Control Panel	**Page 2-49**
DMK-7000	Digital Multi Keyer	**Page 2-62**
BKDS-7060	Keyer Remote Control Panel	**Page 2-64**

2-1

 DVS-M1000C OVERALL

2-1. DVS-M1000C
DVS-M1000C OVERALL BLOCK

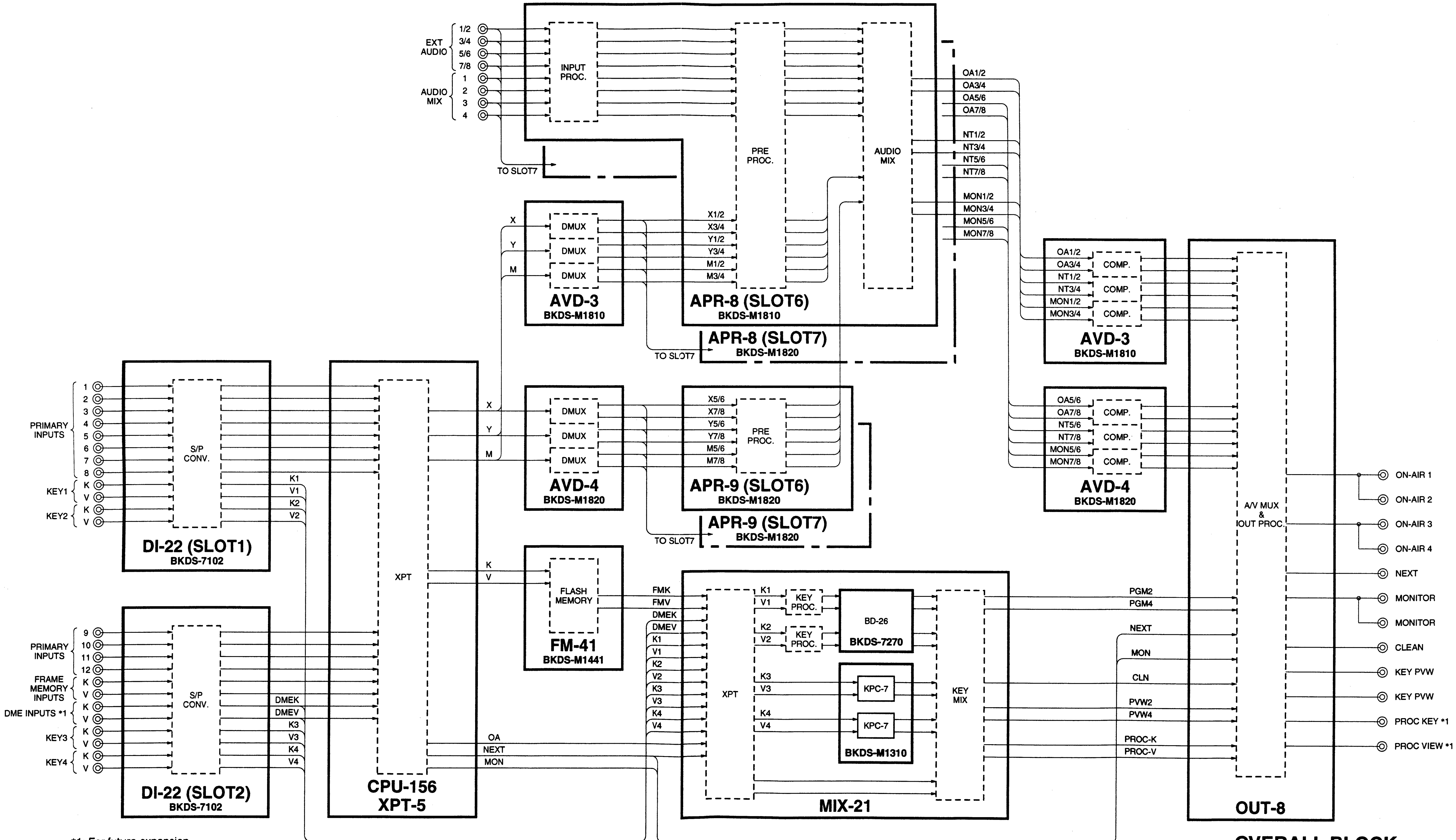

*1: For future expansion

OVERALL BLOCK
DVS-M1000C
BKDS-7102/7270/M1310/M1441/M1810/M1820

 DVS-M1000C FRAME

DVS-M1000C FRAME WIRING

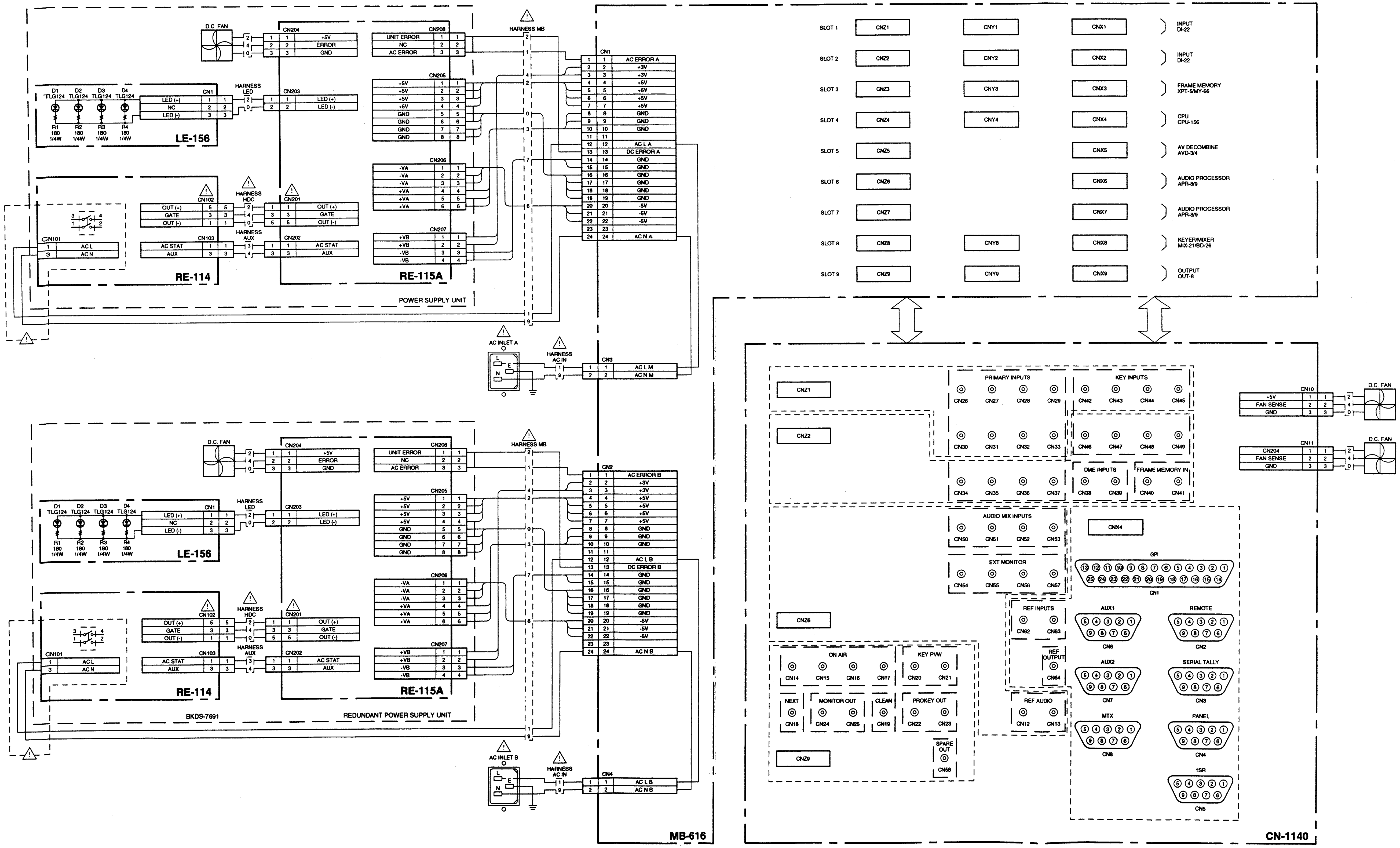

FRAME WIRING

DVS-M1000C
BKDS-7691

2-2. BKDS-M1010
BKDS-M1010 OVERALL BLOCK

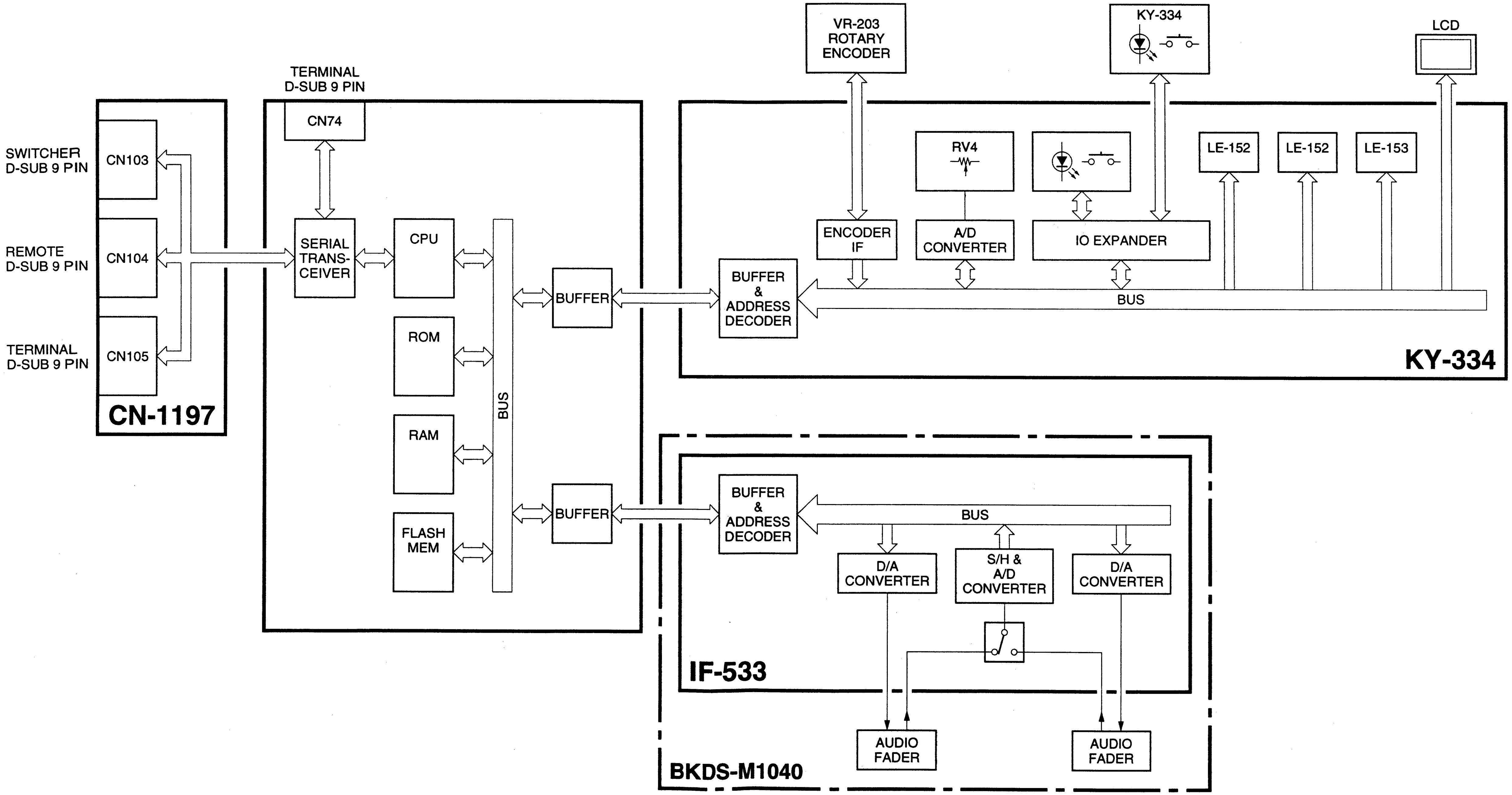

OVERALL BLOCK
BKDS-M1010
BKDS-M1040

BKDS-M1010 FRAME (1/3)

BKDS-M1010 FRAME WIRING

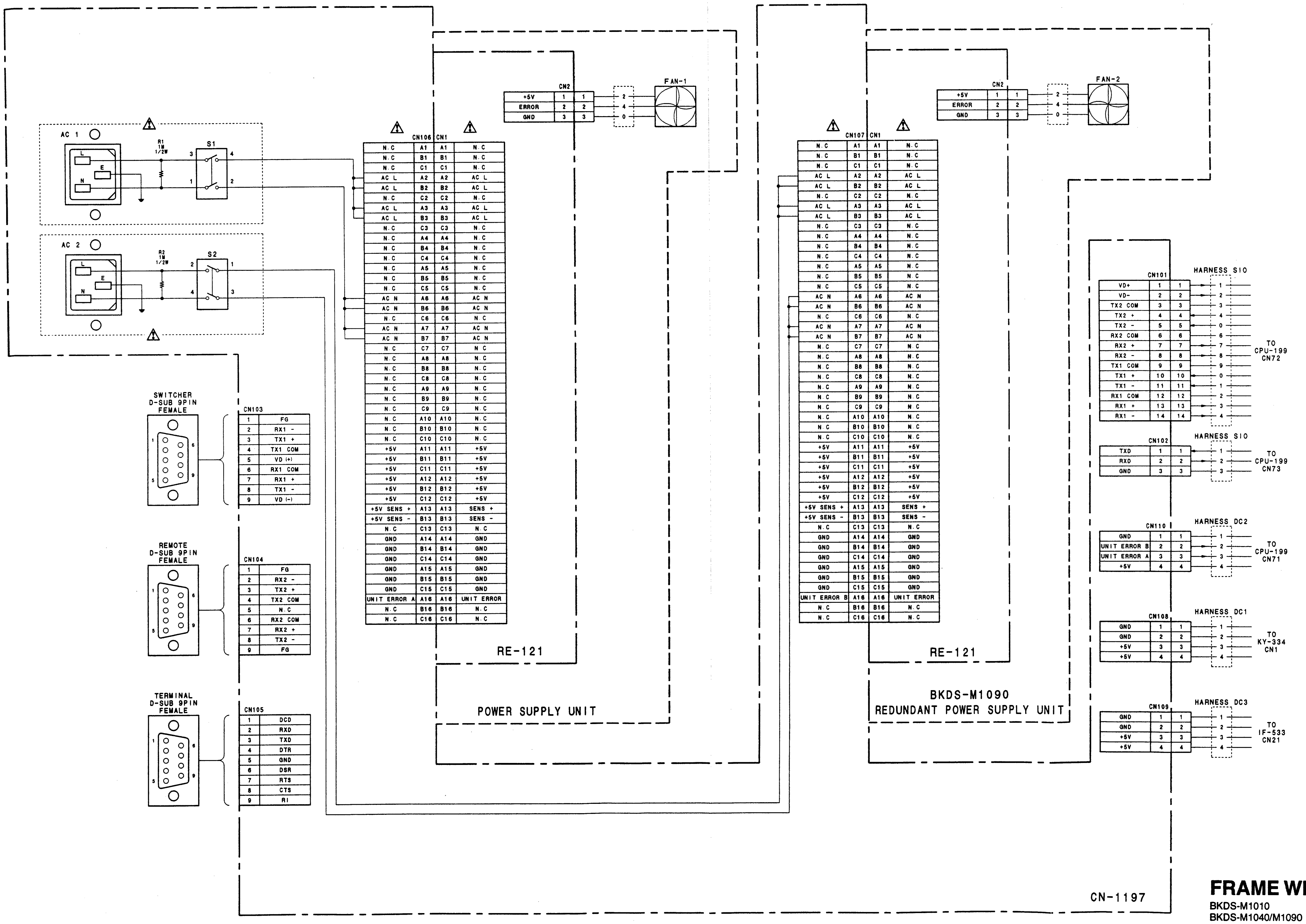

FRAME WIRING (1/3)

BKDS-M1010
BKDS-M1040/M1090

2-5

 BKDS-M1010 FRAME (2/3)

FRAME WIRING (2/3)

BKDS-M1010
BKDS-M1040/M1090

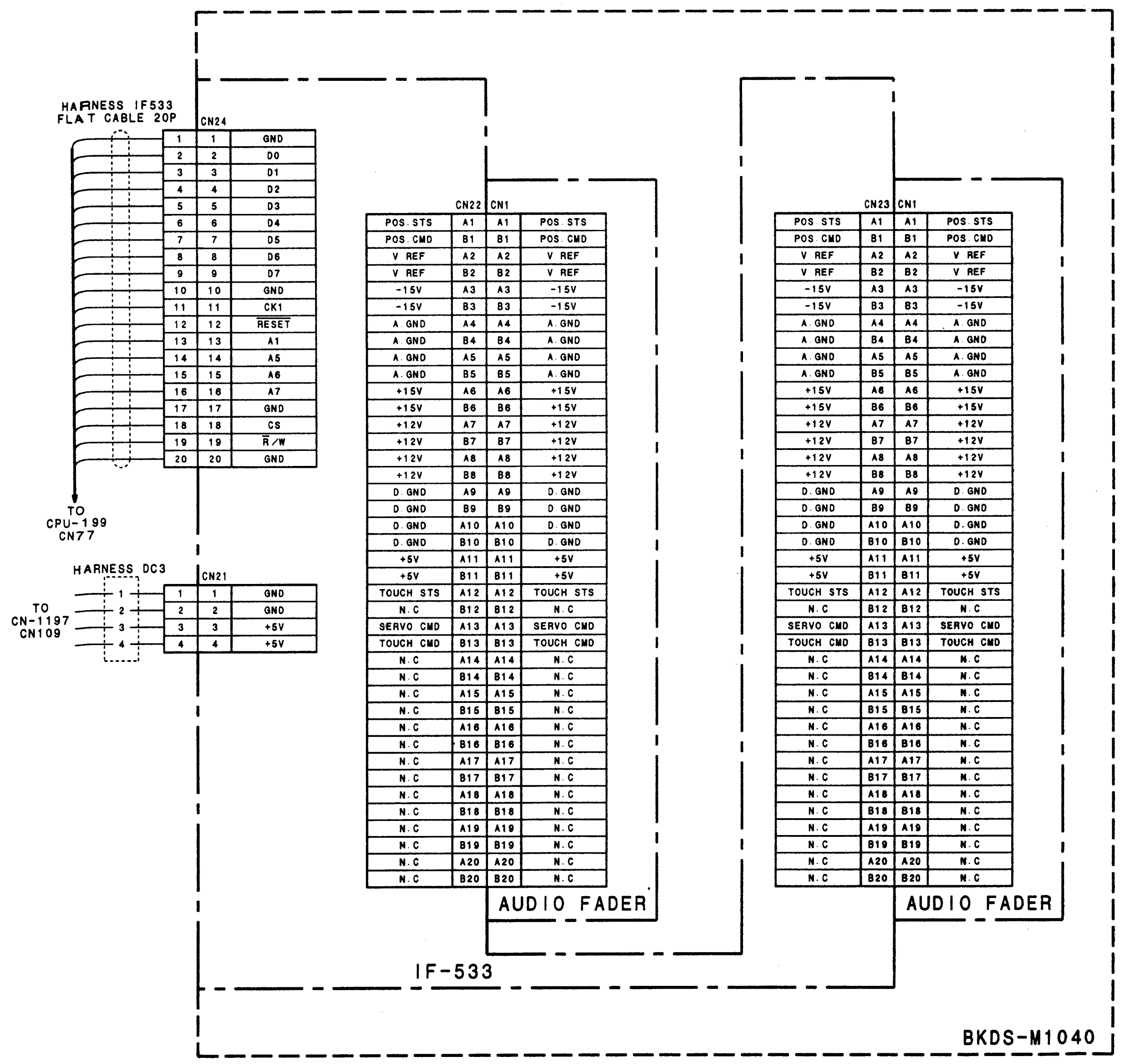

FRAME WIRING(3/3)

BKDS-M1010
BKDS-M1040/M1090

2-3. DVS-7000
DVS-7000 OVERALL BLOCK

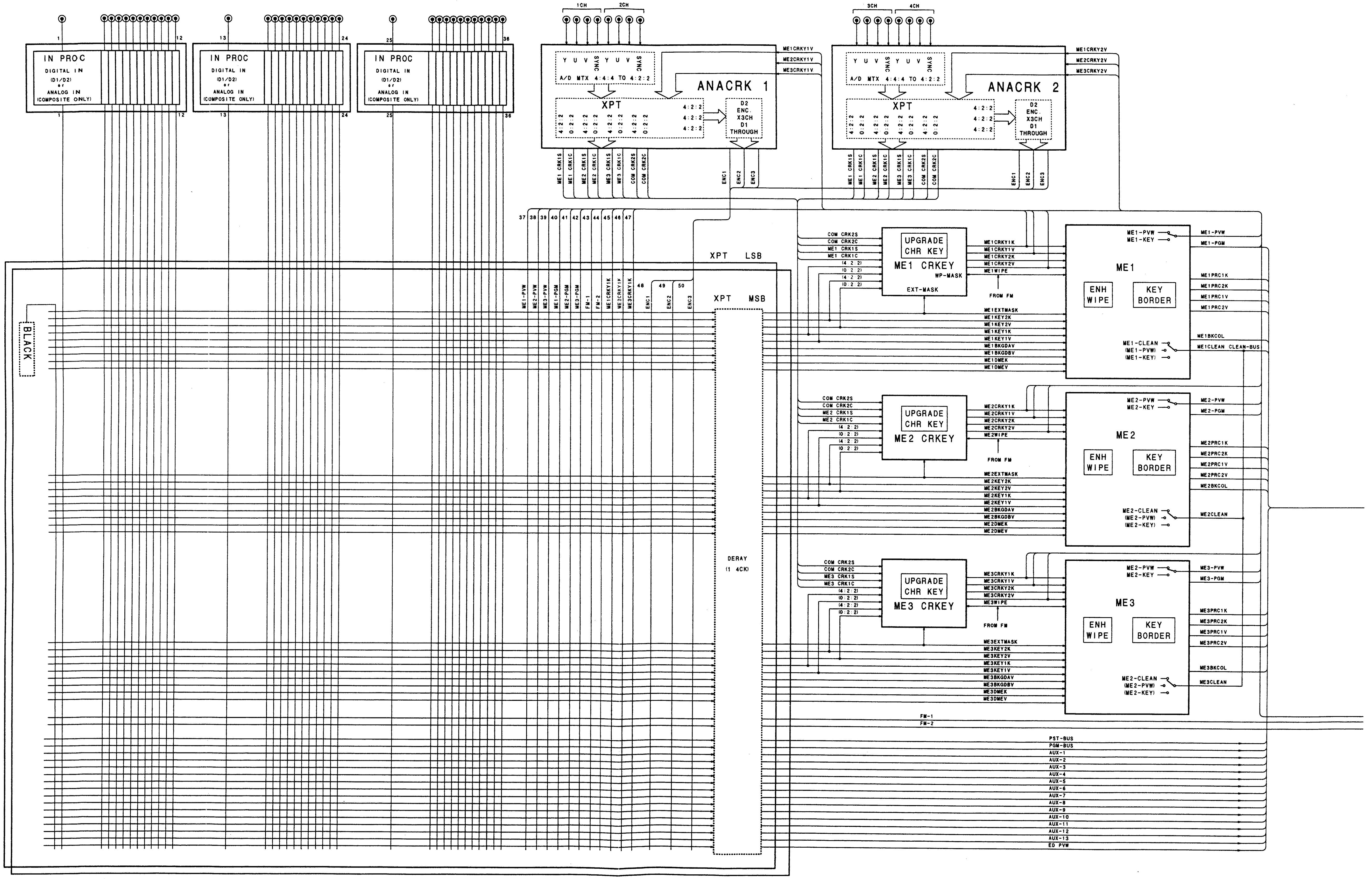

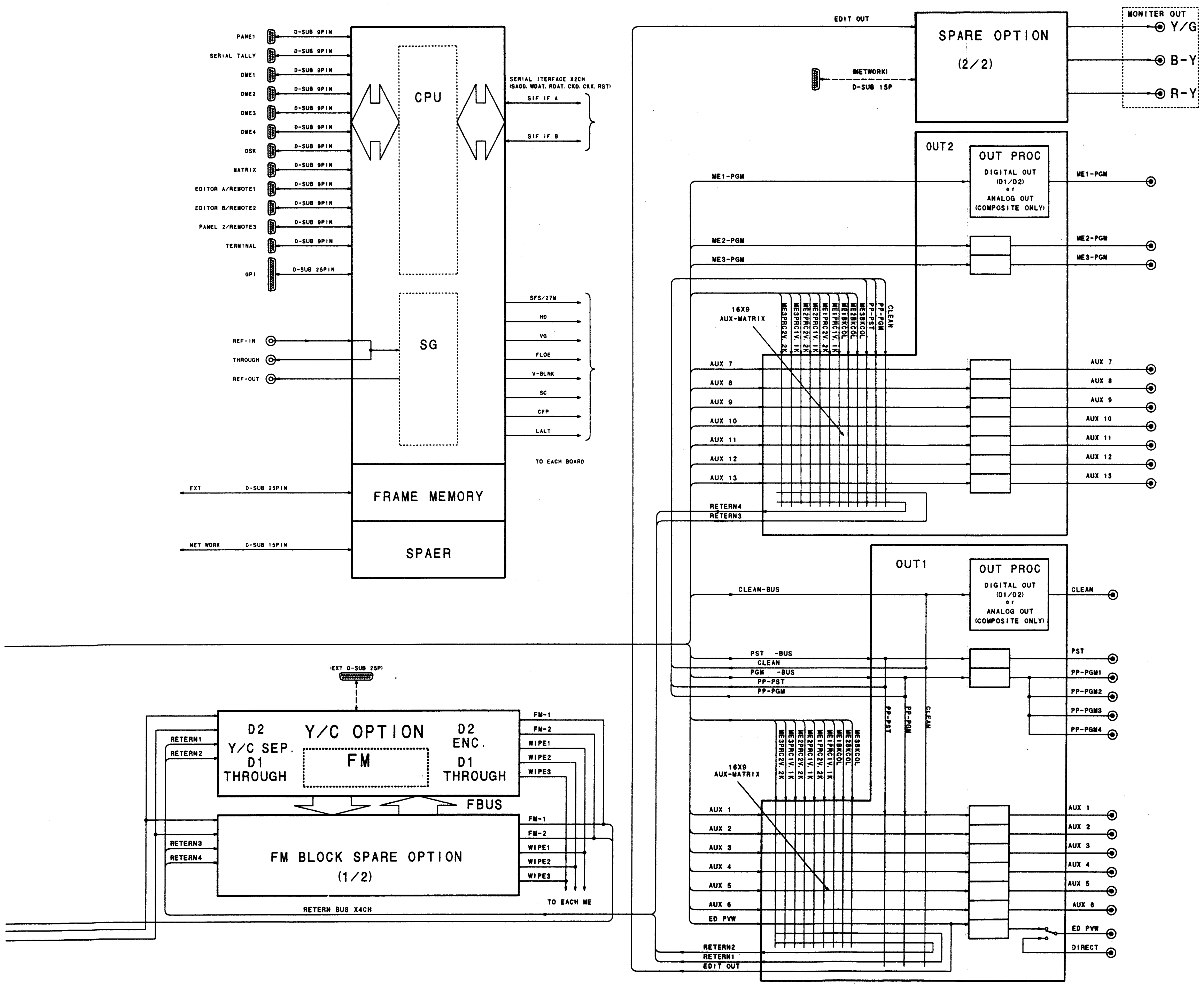

OVERALL BLOCK
DVS-7000

DVS-7000 FRAME

DVS-7000 FRAME WIRING

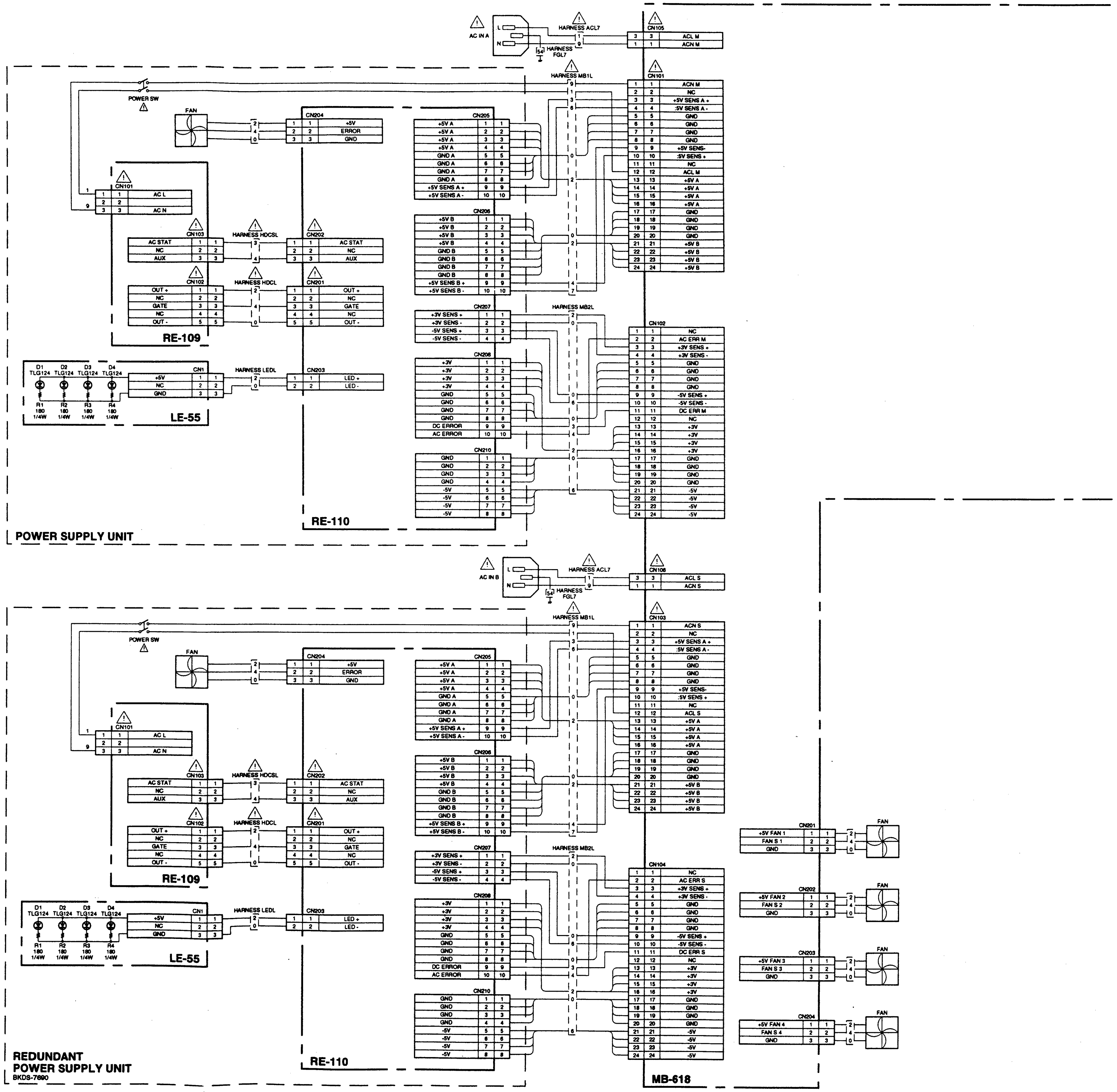

2-10

 DVS-7000 FRAME

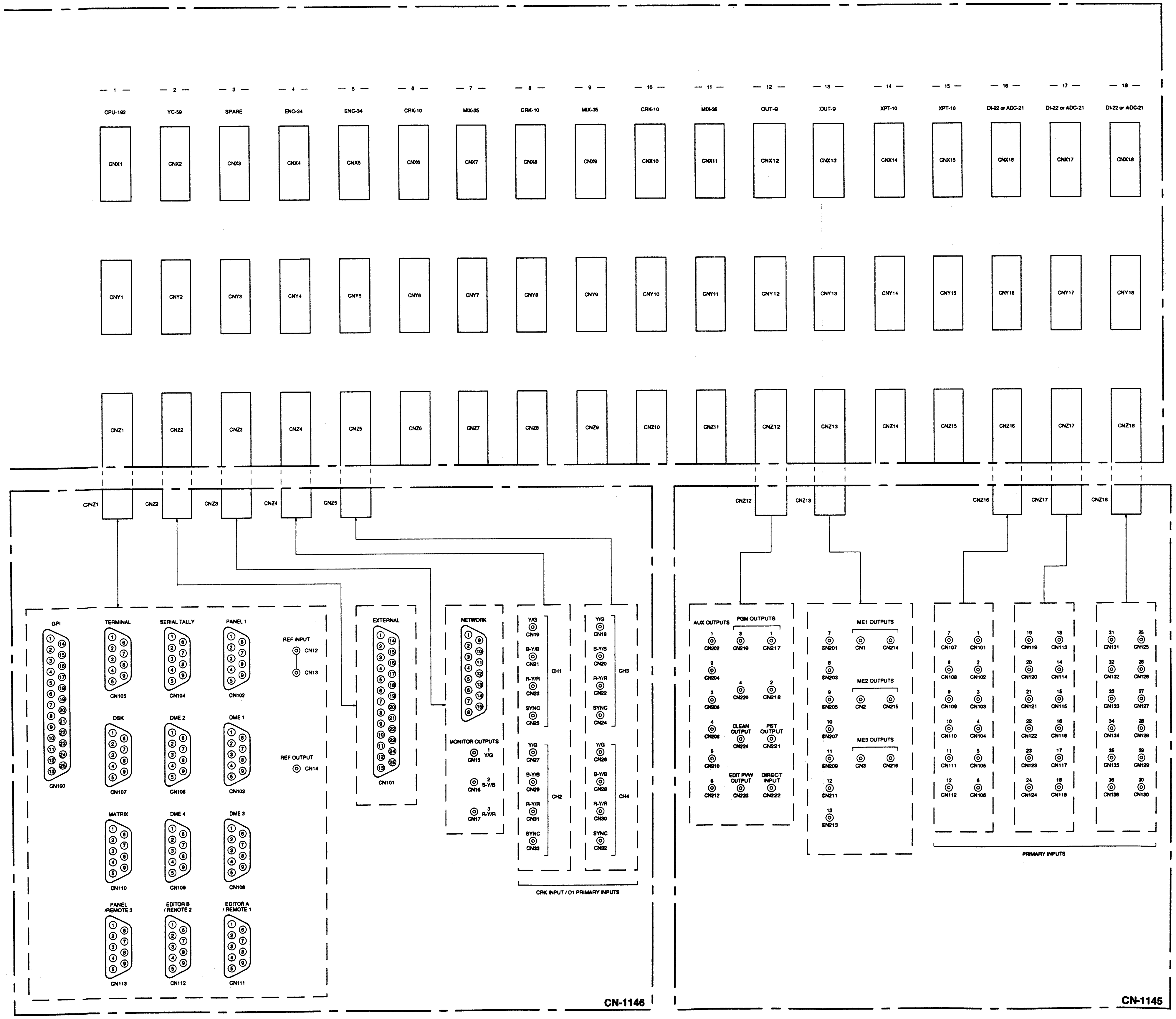

FRAME WIRING
DVS-7000
BKDS-7690

 2-11

 BKDS-7011/7012 OVERALL (1/3)

2-4. BKDS-7011/7012
BKDS-7011/7012 OVERALL BLOCK

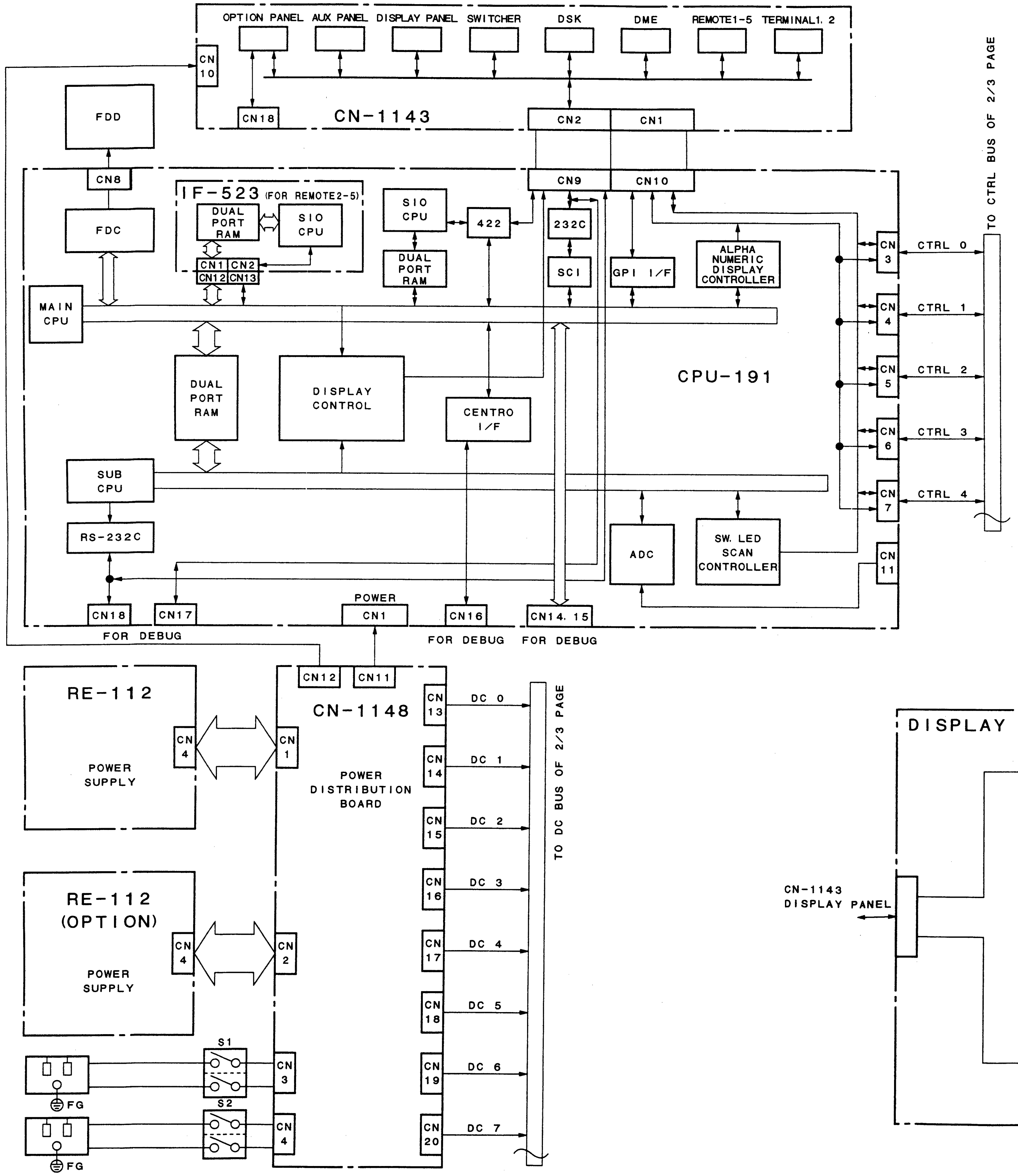

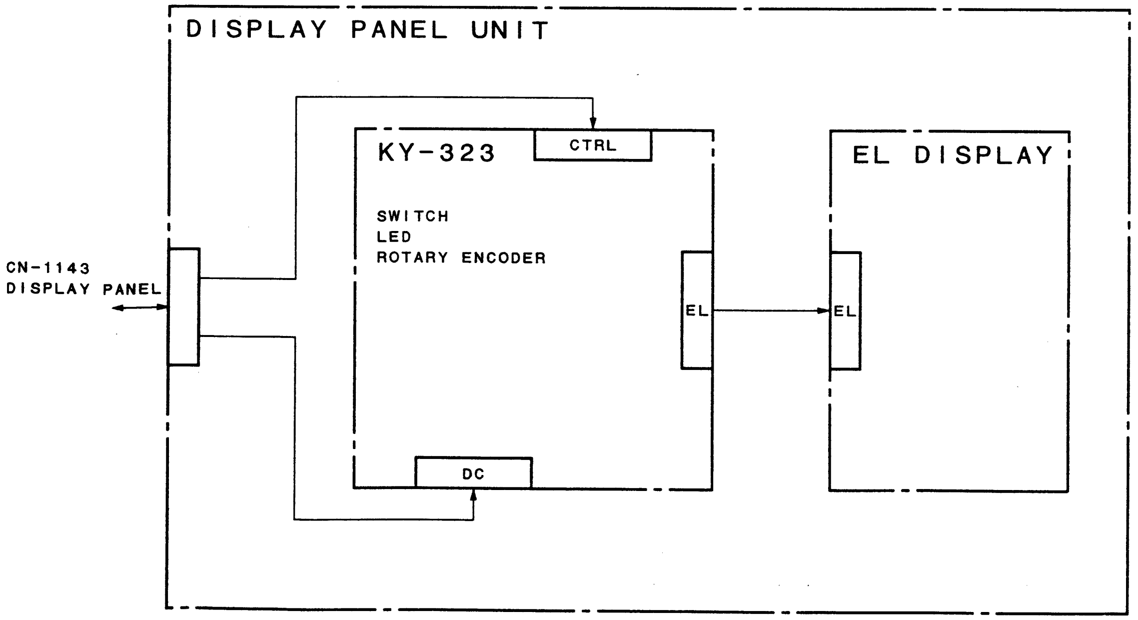

OVERALL BLOCK (1/3)
BKDS-7011/7012
BKDS-7001/7090

 BKDS-7011/7012 OVERALL (2/3)

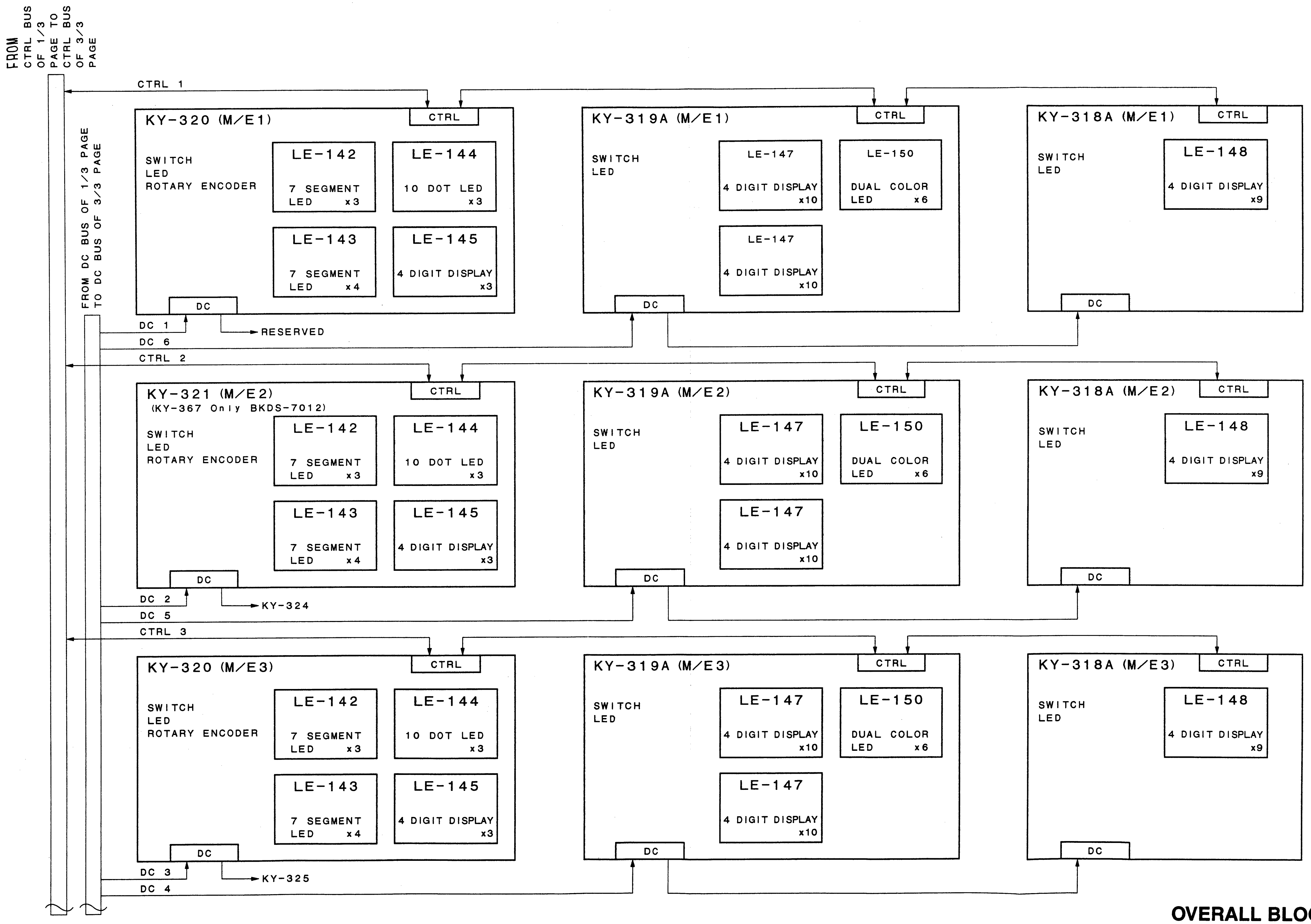

OVERALL BLOCK (2/3)
BKDS-7011/7012

 BKDS-7011/7012 OVERALL (3/3)

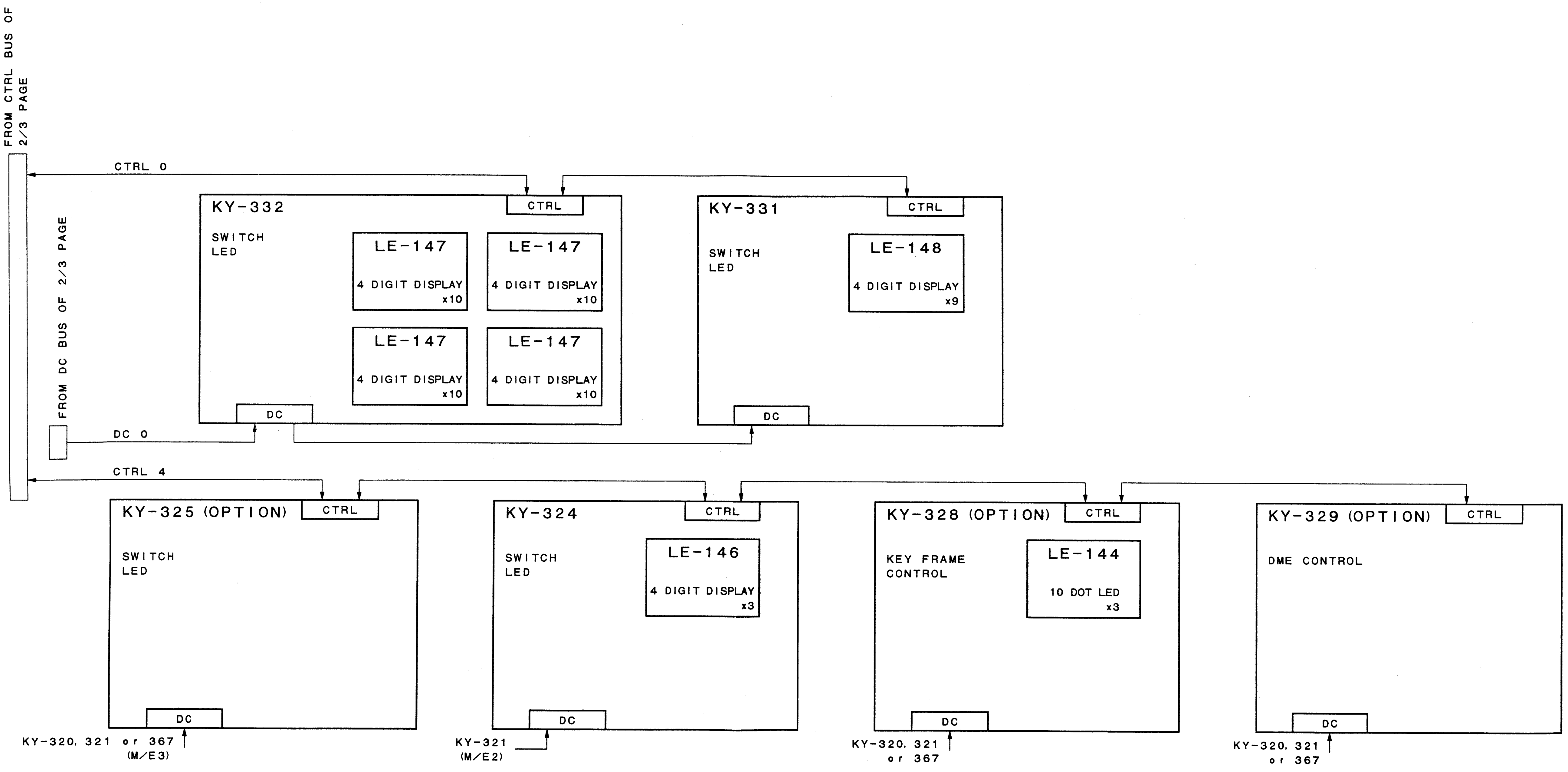

OVERALL BLOCK (3/3)

BKDS-7011/7012
BKDS-7030/7031/7032

 BKDS-7011/7012 FRAME (1/9)

BKDS-7011/7012 FRAME WIRING

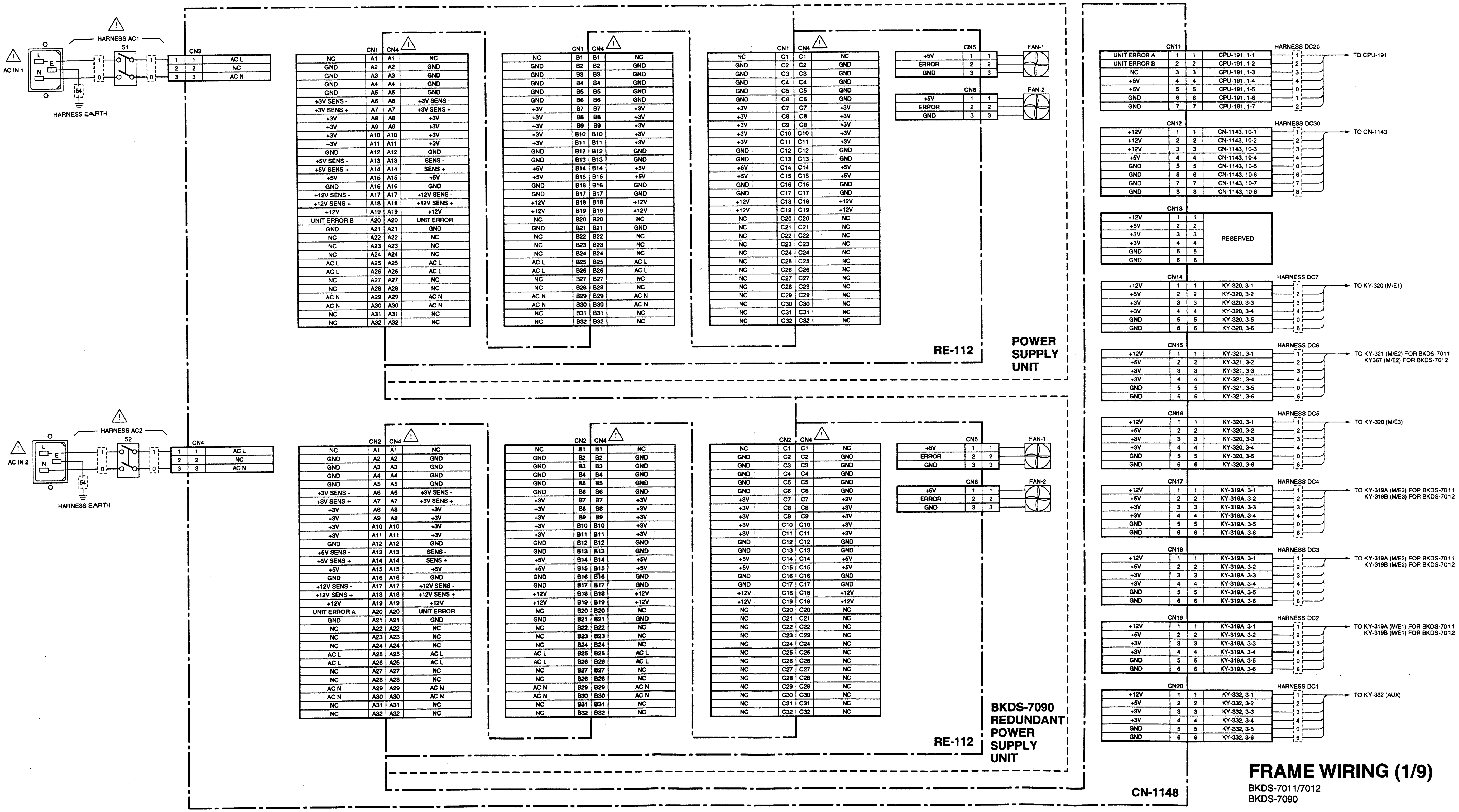

FRAME WIRING (1/9)

BKDS-7011/7012
BKDS-7090

 BKDS-7011/7012 FRAME (2/9)

FRAME WIRING (2/9)

BKDS-7011/7012

CPU-191

CN9 — HARNESS RPNL (FLAT CABLE 60P) — TO CN-1143

GND	1	1	CN-1143, 2-1
GND	2	2	CN-1143, 2-2
GND	3	3	CN-1143, 2-3
TX6 (-)	4	4	CN-1143, 2-4
RV6 (+)	5	5	CN-1143, 2-5
GND	6	6	CN-1143, 2-6
GND	7	7	CN-1143, 2-7
GND	8	8	CN-1143, 2-8
TX7 (-)	9	9	CN-1143, 2-9
RV7 (+)	10	10	CN-1143, 2-10
GND	11	11	CN-1143, 2-11
GND	12	12	CN-1143, 2-12
GND	13	13	CN-1143, 2-13
GND	14	14	CN-1143, 2-14
GND	15	15	CN-1143, 2-15
GND	16	16	CN-1143, 2-16
NC	17	17	CN-1143, 2-17
A-TWDT	18	18	CN-1143, 2-18
E-WDT	19	19	CN-1143, 2-19
GND	20	20	CN-1143, 2-20
GND	21	21	CN-1143, 2-21
GND	22	22	CN-1143, 2-22
GND	23	23	CN-1143, 2-23
GND	24	24	CN-1143, 2-24
GND	25	25	CN-1143, 2-25
GND	26	26	CN-1143, 2-26
GND	27	27	CN-1143, 2-27
GND	28	28	CN-1143, 2-28
GND	29	29	CN-1143, 2-29
GND	30	30	CN-1143, 2-30
TXD0	31	31	CN-1143, 2-31
RXD0	32	32	CN-1143, 2-32
TX6 (+)	33	33	CN-1143, 2-33
GND	34	34	CN-1143, 2-34
RX6 (-)	35	35	CN-1143, 2-35
TXD1	36	36	CN-1143, 2-36
RXD1	37	37	CN-1143, 2-37
TX7 (+)	38	38	CN-1143, 2-38
GND	39	39	CN-1143, 2-39
RX7 (-)	40	40	CN-1143, 2-40
ELCK	41	41	CN-1143, 2-41
ELDATA0	42	42	CN-1143, 2-42
ELDATA1	43	43	CN-1143, 2-43
ELVD	44	44	CN-1143, 2-44
ELHD	45	45	CN-1143, 2-45
NC	46	46	CN-1143, 2-46
GND	47	47	CN-1143, 2-47
GND	48	48	CN-1143, 2-48
E-RDT	49	49	CN-1143, 2-49
TCLK	50	50	CN-1143, 2-50
NC	51	51	CN-1143, 2-51
TQCLK	52	52	CN-1143, 2-52
TBLANK	53	53	CN-1143, 2-53
TSEQ	54	54	CN-1143, 2-54
SCLK	55	55	CN-1143, 2-55
SEQ	56	56	CN-1143, 2-56
A-WDT	57	57	CN-1143, 2-57
BLANK	58	58	CN-1143, 2-58
A-RDT	59	59	CN-1143, 2-59
IWLD	60	60	CN-1143, 2-60

CN10 — HARNESS RPNL (FLAT CABLE 60P) — TO CN-1143

G1A	1	1	CN-1143, 1-1
G2A	2	2	CN-1143, 1-2
G3A	3	3	CN-1143, 1-3
G4A	4	4	CN-1143, 1-4
GO5	5	5	CN-1143, 1-5
GO7	6	6	CN-1143, 1-6
GPI IN 1	7	7	CN-1143, 1-7
GPI IN 3	8	8	CN-1143, 1-8
GPI IN 5	9	9	CN-1143, 1-9
GPI IN 7	10	10	CN-1143, 1-10
GND	11	11	CN-1143, 1-11
TX0 (-)	12	12	CN-1143, 1-12
RX0 (+)	13	13	CN-1143, 1-13
GND	14	14	CN-1143, 1-14
FLD (-)	15	15	CN-1143, 1-15
TX3 (+)	16	16	CN-1143, 1-16
GND	17	17	CN-1143, 1-17
RX3 (-)	18	18	CN-1143, 1-18
TX1 (+)	19	19	CN-1143, 1-19
GND	20	20	CN-1143, 1-20
RX1 (-)	21	21	CN-1143, 1-21
TX4 (+)	22	22	CN-1143, 1-22
GND	23	23	CN-1143, 1-23
RX4 (-)	24	24	CN-1143, 1-24
TX2 (+)	25	25	CN-1143, 1-25
GND	26	26	CN-1143, 1-26
RX2 (-)	27	27	CN-1143, 1-27
TX5 (+)	28	28	CN-1143, 1-28
GND	29	29	CN-1143, 1-29
RX5 (-)	30	30	CN-1143, 1-30
G 1 B	31	31	CN-1143, 1-31
G 2 B	32	32	CN-1143, 1-32
G 3 B	33	33	CN-1143, 1-33
G 4 B	34	34	CN-1143, 1-34
G O 6	35	35	CN-1143, 1-35
G O 8	36	36	CN-1143, 1-36
GPI IN 2	37	37	CN-1143, 1-37
GPI IN 4	38	38	CN-1143, 1-38
GPI IN 6	39	39	CN-1143, 1-39
GPI IN 8	40	40	CN-1143, 1-40
TX0 (+)	41	41	CN-1143, 1-41
GND	42	42	CN-1143, 1-42
RX0 (-)	43	43	CN-1143, 1-43
FLD (+)	44	44	CN-1143, 1-44
GND	45	45	CN-1143, 1-45
TX3 (-)	46	46	CN-1143, 1-46
RX3 (+)	47	47	CN-1143, 1-47
GND	48	48	CN-1143, 1-48
TX1 (-)	49	49	CN-1143, 1-49
RX1 (+)	50	50	CN-1143, 1-50
GND	51	51	CN-1143, 1-51
TX4 (-)	52	52	CN-1143, 1-52
RX4 (+)	53	53	CN-1143, 1-53
GND	54	54	CN-1143, 1-54
TX2 (-)	55	55	CN-1143, 1-55
RX2 (+)	56	56	CN-1143, 1-56
GND	57	57	CN-1143, 1-57
TX5 (-)	58	58	CN-1143, 1-58
RX5 (+)	59	59	CN-1143, 1-59
GND	60	60	CN-1143, 1-60

CN3 — HARNESS CTRL 2 — TO KY-332 (AUX)

SCLK	1	1	KY-332, 1-1	1
BLANK	2	2	KY-332, 1-2	2
SEQ	3	3	KY-332, 1-3	3
IWLD	4	4	KY-332, 1-4	4
WDT	5	5	KY-332, 1-5	0
RDT	6	6	KY-332, 1-6	6
TCLK	7	7	KY-332, 1-7	7
TBLANK	8	8	KY-332, 1-8	8
TSEQ	9	9	KY-332, 1-9	9
TQCLK	10	10	KY-332, 1-10	0
TWDT0	11	11	KY-332, 1-11	1
GND	12	12	KY-332, 1-12	2

CN4 — HARNESS CTRL 1 — TO KY-320 (M/E1)

SCLK	1	1	KY-320, 1-1	1
BLANK	2	2	KY-320, 1-2	2
SEQ	3	3	KY-320, 1-3	3
IWLD	4	4	KY-320, 1-4	4
WDT	5	5	KY-320, 1-5	0
RDT	6	6	KY-320, 1-6	6
TCLK	7	7	KY-320, 1-7	7
TBLANK	8	8	KY-320, 1-8	8
TSEQ	9	9	KY-320, 1-9	9
TQCLK	10	10	KY-320, 1-10	0
TWDT1	11	11	KY-320, 1-11	1
GND	12	12	KY-320, 1-12	2

CN5 — HARNESS CTRL 1 — TO KY-321 (M/E2) FOR BKDS-7011, KY-367 (M/E2) FOR BKDS-7012

SCLK	1	1	KY-321, 1-1	1
BLANK	2	2	KY-321, 1-2	2
SEQ	3	3	KY-321, 1-3	3
IWLD	4	4	KY-321, 1-4	4
WDT	5	5	KY-321, 1-5	0
RDT	6	6	KY-321, 1-6	6
TCLK	7	7	KY-321, 1-7	7
TBLANK	8	8	KY-321, 1-8	8
TSEQ	9	9	KY-321, 1-9	9
TQCLK	10	10	KY-321, 1-10	0
TWDT2	11	11	KY-321, 1-11	1
GND	12	12	KY-321, 1-12	2

CN6 — HARNESS CTRL 1 — TO KY-320 (M/E3)

SCLK	1	1	KY-320, 1-1	1
BLANK	2	2	KY-320, 1-2	2
SEQ	3	3	KY-320, 1-3	3
IWLD	4	4	KY-320, 1-4	4
WDT	5	5	KY-320, 1-5	0
RDT	6	6	KY-320, 1-6	6
TCLK	7	7	KY-320, 1-7	7
TBLANK	8	8	KY-320, 1-8	8
TSEQ	9	9	KY-320, 1-9	9
TQCLK	10	10	KY-320, 1-10	0
TWDT3	11	11	KY-320, 1-11	1
GND	12	12	KY-320, 1-12	2

CN17 — MAIN 232C

MTXD	1	1	TEST TERMINAL
MRXD	2	2	
GND	3	3	

CN18 — SUB 232C

TXD0	1	1	TEST TERMINAL
RXD0	2	2	
GND	3	3	

CN11 — JOY STICK

POS-X	1	1	RESERVED
POS-Y	2	2	
POS-Z	3	3	
GND	4	4	

CN1 — HARNESS DC20 — TO CN-1148

1	CN-1148, 11-1	1	1	UNIT ERROR
2	CN-1148, 11-2	2	2	AC ERROR
3	CN-1148, 11-3	3	3	NC
4	CN-1148, 11-4	4	4	+5V
0	CN-1148, 11-5	5	5	+5V
6	CN-1148, 11-6	6	6	GND
7	CN-1148, 11-7	7	7	GND

CN7 — HARNESS CTRL 3 — TO KY-325

SCLK	1	1	KY-325, 1-1	1
BLANK	2	2	KY-325, 1-2	2
SEQ	3	3	KY-325, 1-3	3
IWLD	4	4	KY-325, 1-4	4
WDT	5	5	KY-325, 1-5	0
RDT	6	6	KY-325, 1-6	6
TCLK	7	7	KY-325, 1-7	7
TBLANK	8	8	KY-325, 1-8	8
TSEQ	9	9	KY-325, 1-9	9
TQCLK	10	10	KY-325, 1-10	0
TWDT4	11	11	KY-325, 1-11	1
GND	12	12	KY-325, 1-12	2

CN8 — WIRE, FLAT TYPE (26 CORE) — FLOPPY DISK DRIVE UNIT

CN8			FLOPPY DISK DRIVE UNIT
SIDE1	1	1	SIDE1
GND	2	2	GND
READ DAT	3	3	READ DAT
GND	4	4	GND
WRITE PROT	5	5	WRITE PROT
GND	6	6	GND
TRK00	7	7	TRK00
GND	8	8	GND
WG	9	9	WG
GND	10	10	GND
WD	11	11	WD
GND	12	12	GND
STEP	13	13	STEP
NC	14	14	NC
DIRECTION	15	15	DIRECTION
NC	16	16	NC
MOTOR ON	17	17	MOTOR ON
MDDIA	18	18	MDDIA
READY	19	19	READY
NC	20	20	NC
DISK CHANGE	21	21	DISK CHANGE
+5V	22	22	+5V
DRIVE SELECT	23	23	DRIVE SELECT
+5V	24	24	+5V
INDEX	25	25	INDEX
+5V	26	26	+5V

IF-523

CN12 / CN1

CN12		CN1	
GND	1	1A	GND
GND	2	2A	GND
GND	3	3A	GND
GND	4	4A	GND
TA10	5	5A	TA10
TA9	6	6A	TA9
TA8	7	7A	TA8
TA7	8	8A	TA7
TA6	9	9A	TA6
TA5	10	10A	TA5
TA4	11	11A	TA4
TA3	12	12A	TA3
TA2	13	13A	TA2
TA1	14	14A	TA1
TA0	15	15A	TA0
BUSY	16	16A	BUSY
GD31	17	17A	GD31
GD30	18	18A	GD30
GD29	19	19A	GD29
GD28	20	20A	GD28
GD27	21	21A	GD27
GD26	22	22A	GD26
GD25	23	23A	GD25
GD24	24	24A	GD24
RESET	25	25A	RESET
BRD	26	26A	BRD
BWR	27	27A	BWR
SIO CS2	28	28A	SIO CS2
SIO CS3	29	29A	SIO CS3
NC	30	30A	NC
NC	31	31A	NC
NC	32	32A	NC
+5V	33	33A	+5V
+5V	34	34A	+5V
+5V	35	35A	+5V
+5V	36	36A	+5V
GND	37	37A	GND
GND	38	38A	GND
GND	39	39A	GND
GND	40	40A	GND

CN13 / CN2

CN13		CN2	
GND	1	1A	GND
GND	2	2A	GND
GND	3	3A	GND
GND	4	4A	GND
RX4 (+)	5	5A	RX4 (+)
RX4 (-)	6	6A	RX4 (-)
TX4 (+)	7	7A	TX4 (+)
TX4 (-)	8	8A	TX4 (-)
RX5 (+)	9	9A	RX5 (+)
RX5 (-)	10	10A	RX5 (-)
TX5 (+)	11	11A	TX5 (+)
TX5 (-)	12	12A	TX5 (-)
RX6 (+)	13	13A	RX6 (+)
RX6 (-)	14	14A	RX6 (-)
TX6 (+)	15	15A	TX6 (+)
TX6 (-)	16	16A	TX6 (-)
RX7 (+)	17	17A	RX7 (+)
RX7 (-)	18	18A	RX7 (-)
TX7 (+)	19	19A	TX7 (+)
TX7 (-)	20	20A	TX7 (-)
CM20	21	21A	CM20
CM21	22	22A	CM21
CM30	23	23A	CM30
CM31	24	24A	CM31
ST2	25	25A	ST2
ST3	26	26A	ST3
SIO CONT2	27	27A	SIO CONT2
SIO CONT3	28	28A	SIO CONT3
SIO STS2	29	29A	SIO STS2
SIO STS3	30	30A	SIO STS3
NC	31	31A	NC
NC	32	32A	NC
+5V	33	33A	+5V
+5V	34	34A	+5V
+5V	35	35A	+5V
+5V	36	36A	+5V
GND	37	37A	GND
GND	38	38A	GND
GND	39	39A	GND
GND	40	40A	GND

FLOPPY DISK DRIVE UNIT

TO KY-332 (AUX)
TO KY-320 (M/E1)
TO KY-325
TO CN-1148
TO CN-1143
TO CN-1143
TO KY-321 (M/E2) FOR BKDS-7011
KY-367 (M/E2) FOR BKDS-7012
TO KY-320 (M/E3)

 BKDS-7011/7012 FRAME (3/9)

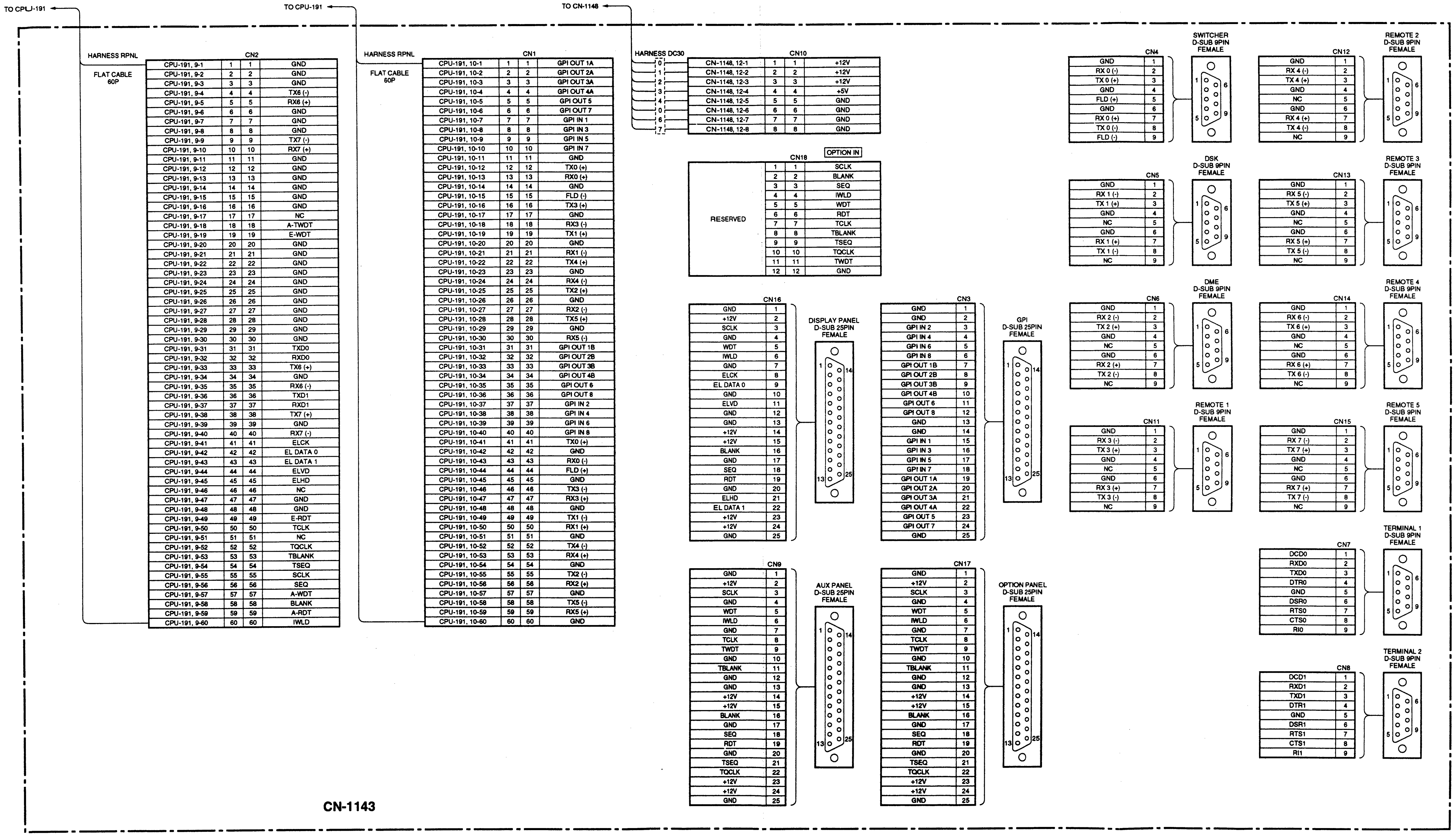

FRAME WIRING (3/9)

BKDS-7011/7012

 BKDS-7011/7012 FRAME (4/9)

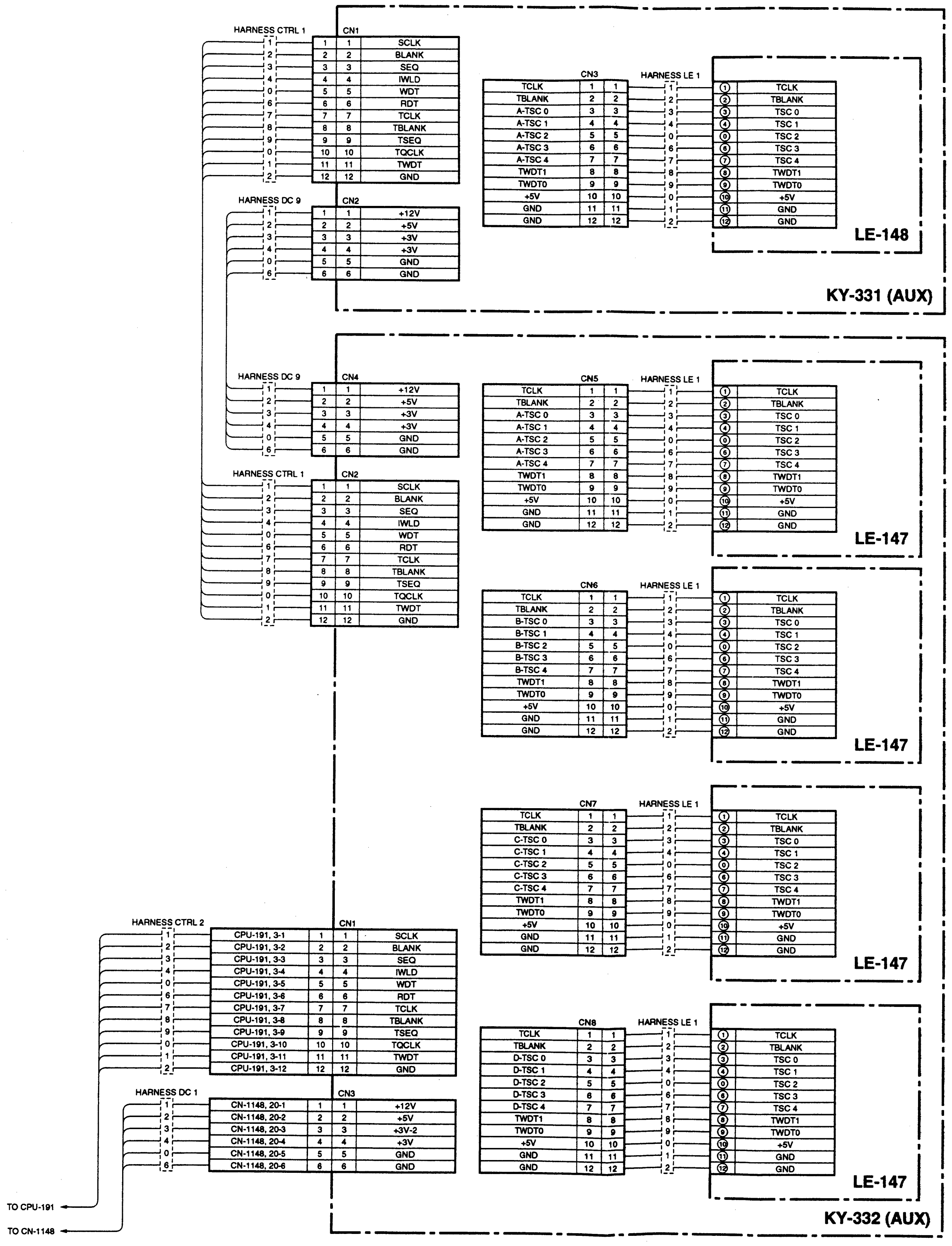

FRAME WIRING (4/9)

BKDS-7011/7012

 2-18

 BKDS-7011/7012 FRAME (5/9)

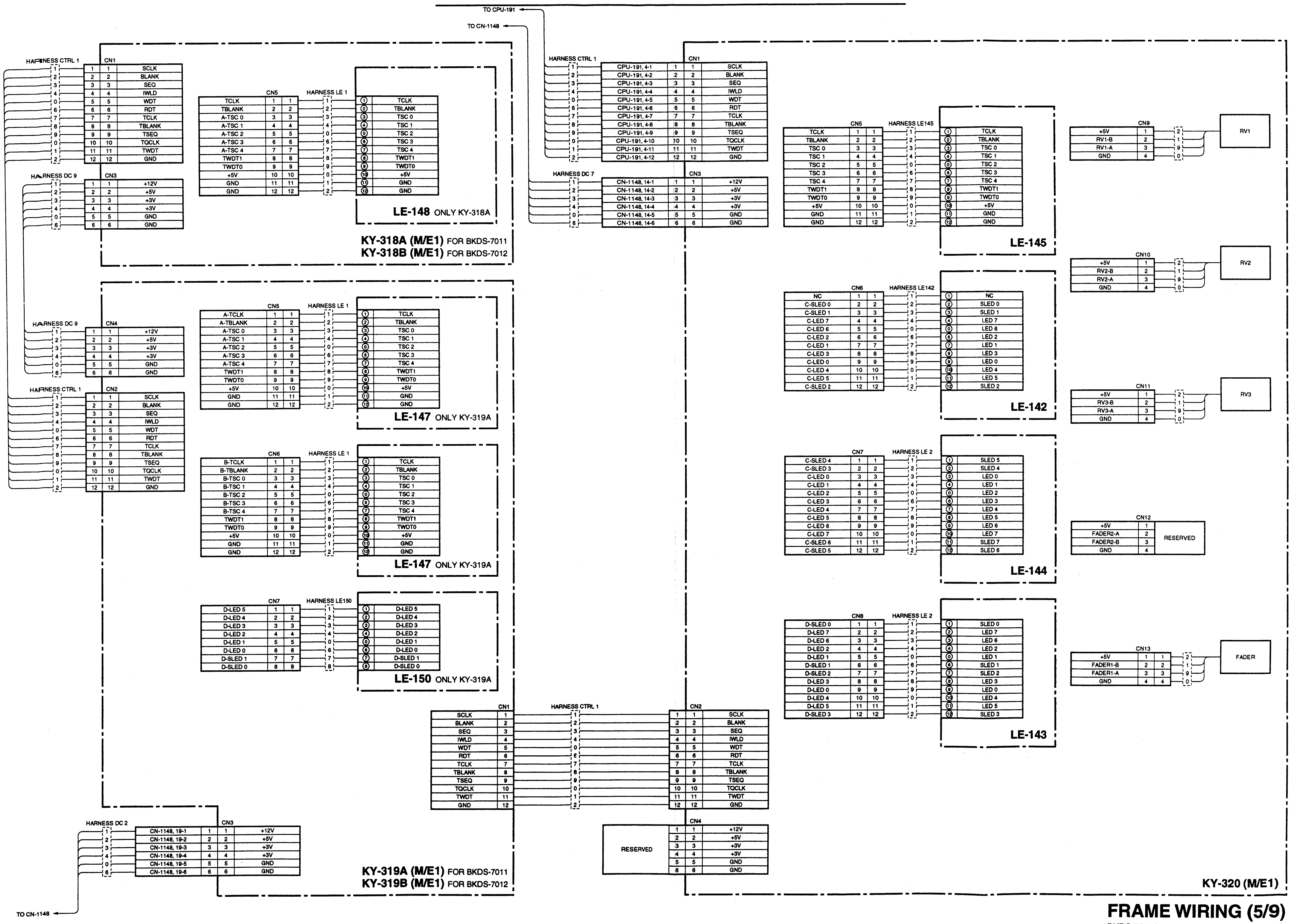

FRAME WIRING (5/9)

BKDS-7011/7012

BKDS-7011/7012 FRAME (6/9)

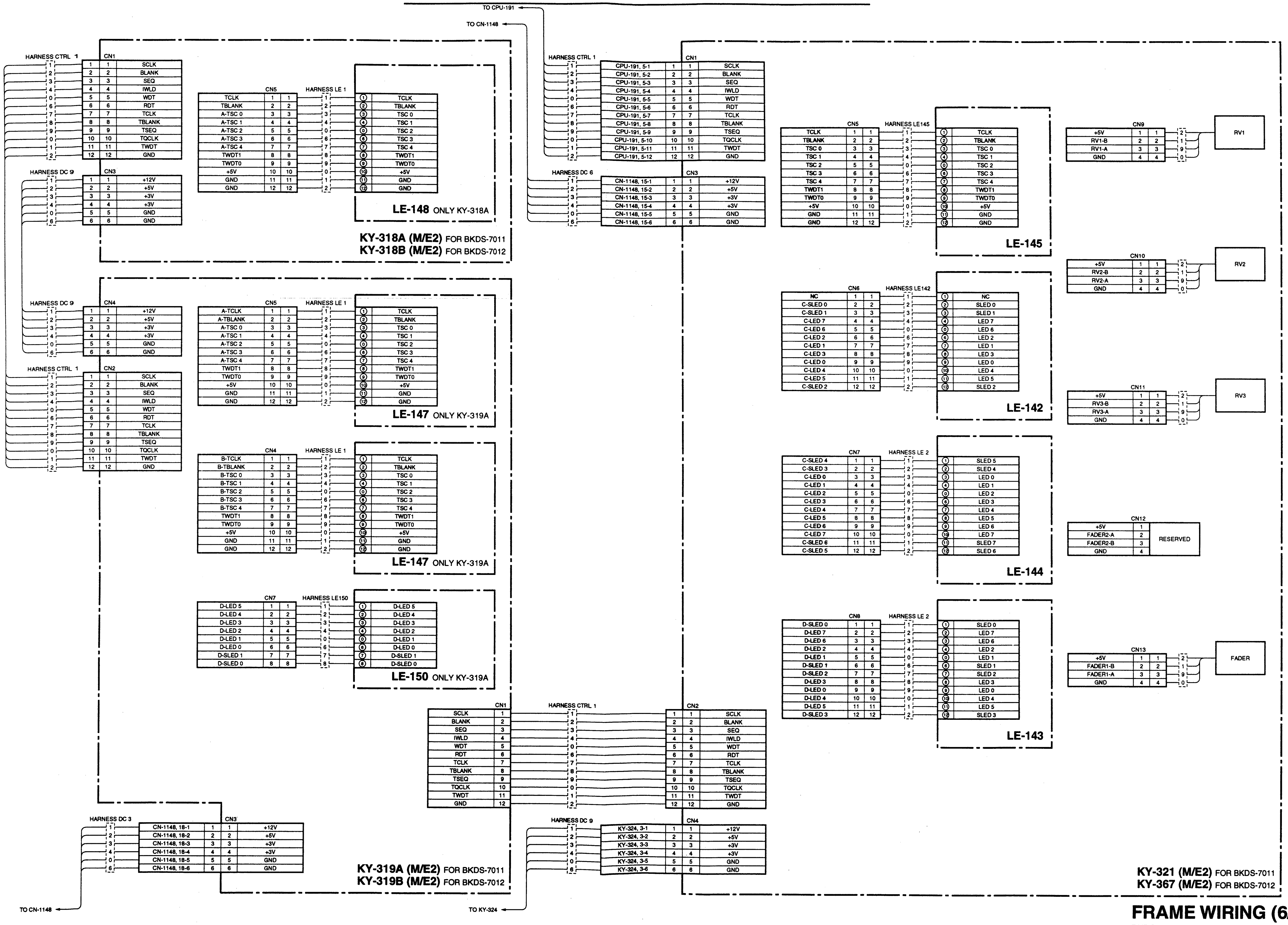

FRAME WIRING (6/9)

BKDS-7011/7012

 BKDS-7011/7012 FRAME (7/9)

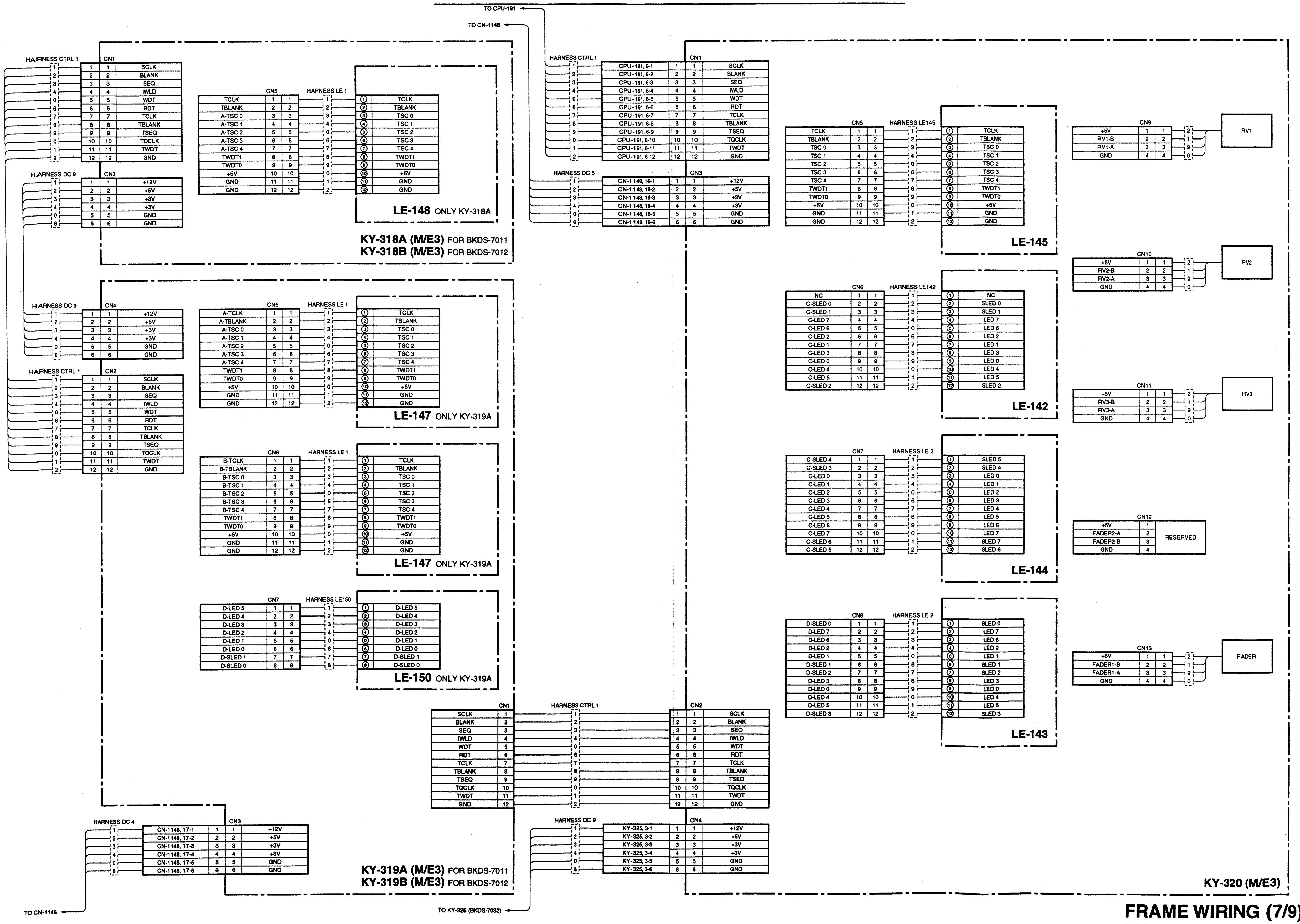

FRAME WIRING (7/9)

BKDS-7011/7012

 BKDS-7011/7012 FRAME (8/9)

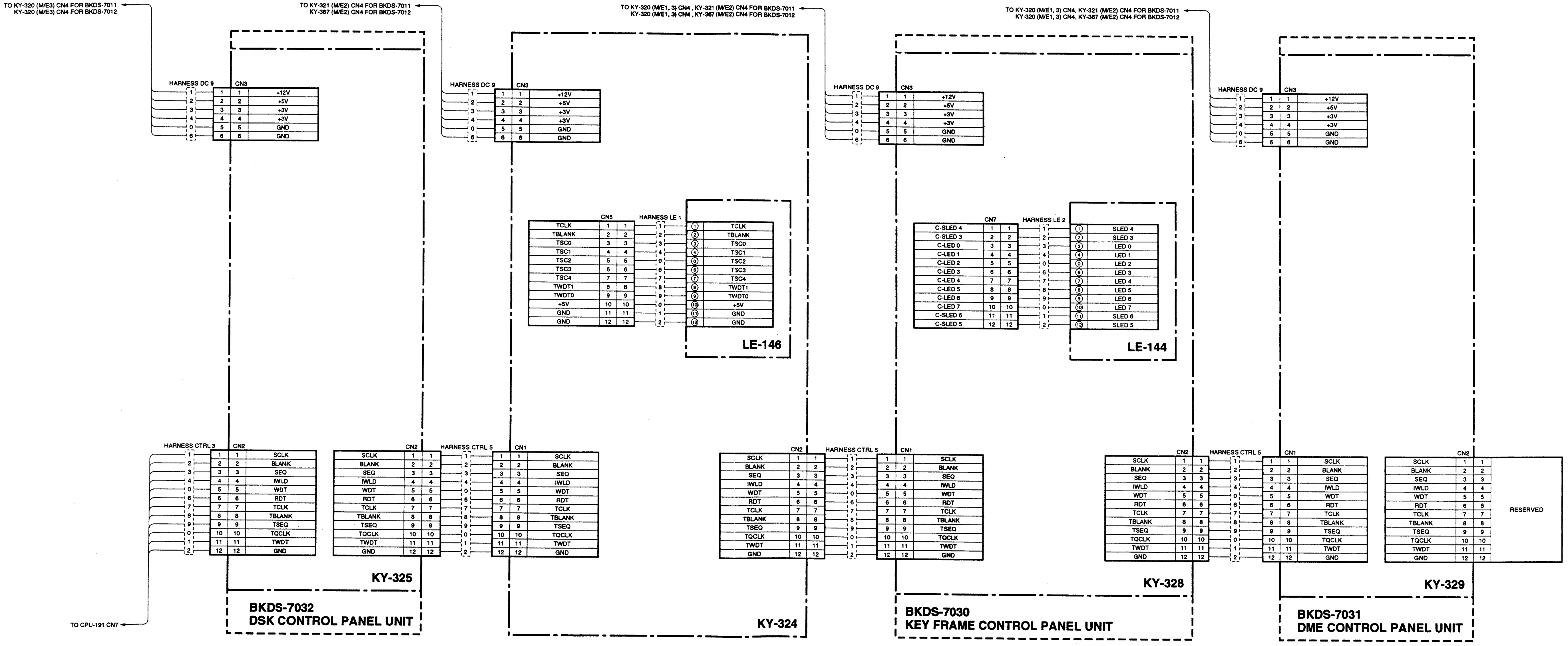

FRAME WIRING (8/9)

BKDS-7011/7012
BKDS-7030/7031/7032

 2-22

 BKDS-7011/7012 FRAME (9/9)

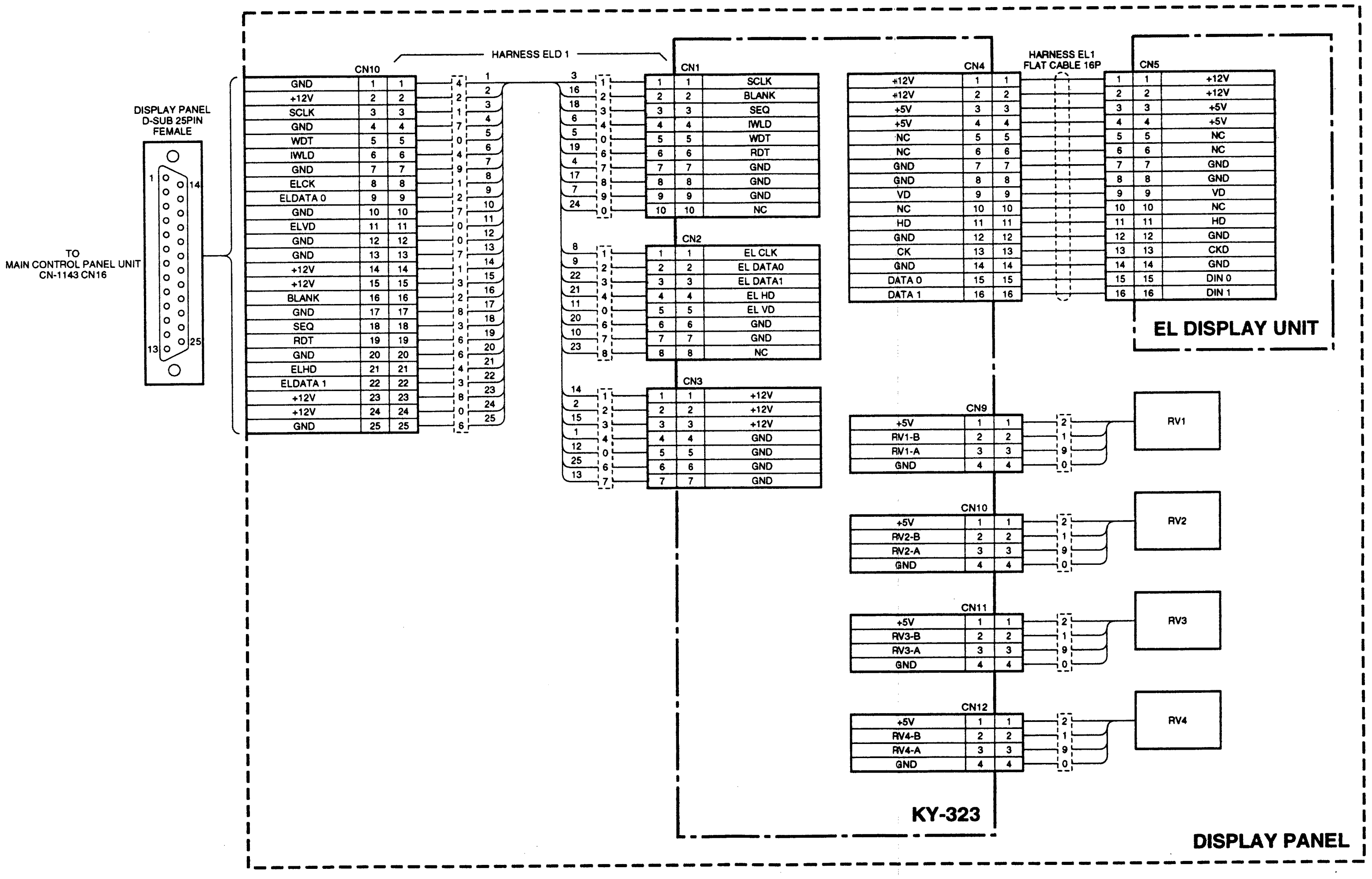

FRAME WIRING (9/9)

BKDS-7011/7012

 2-23

BKDS-7021/7022/7023 OVERALL (1/3)

2-5. BKDS-7021/7022/7023 BKDS-7021/7022/7023 OVERALL BLOCK

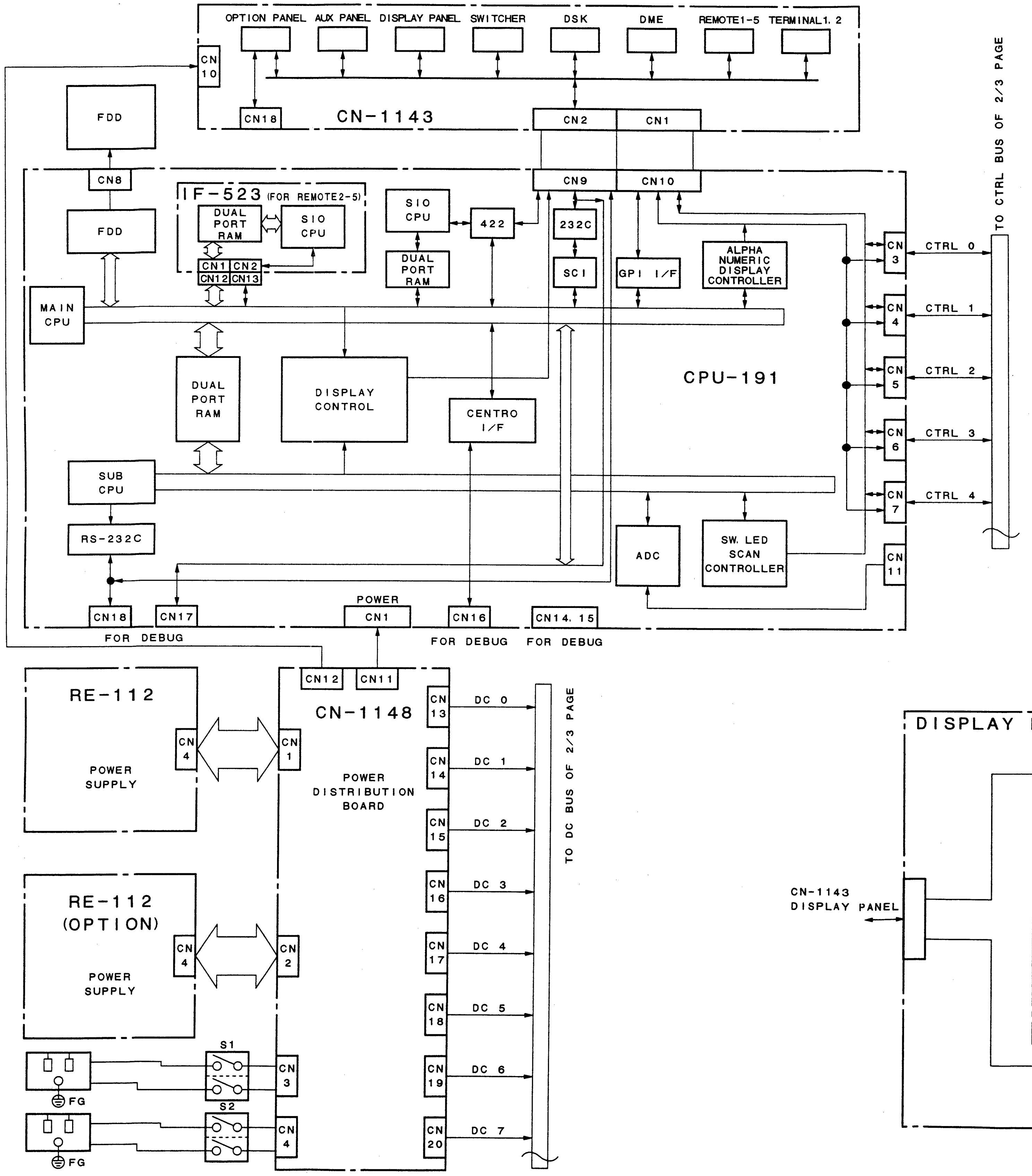

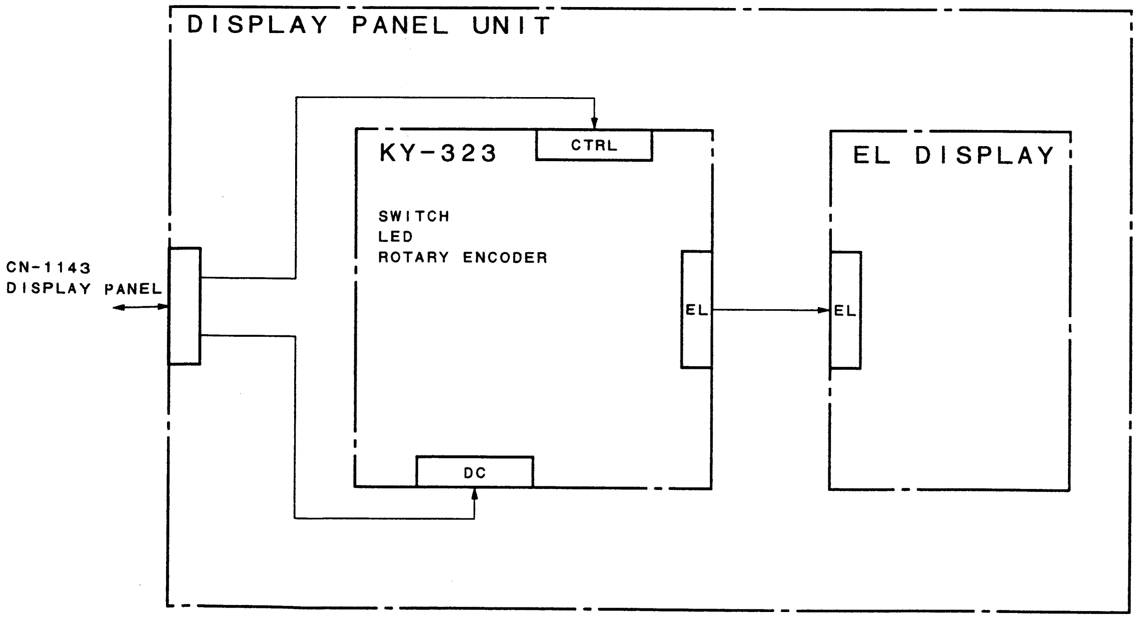

OVERALL BLOCK (1/3)
BKDS-7021/7022/7023
BKDS-7001/7090

2-24

 BKDS-7021/7022/7023 OVERALL (2/3)

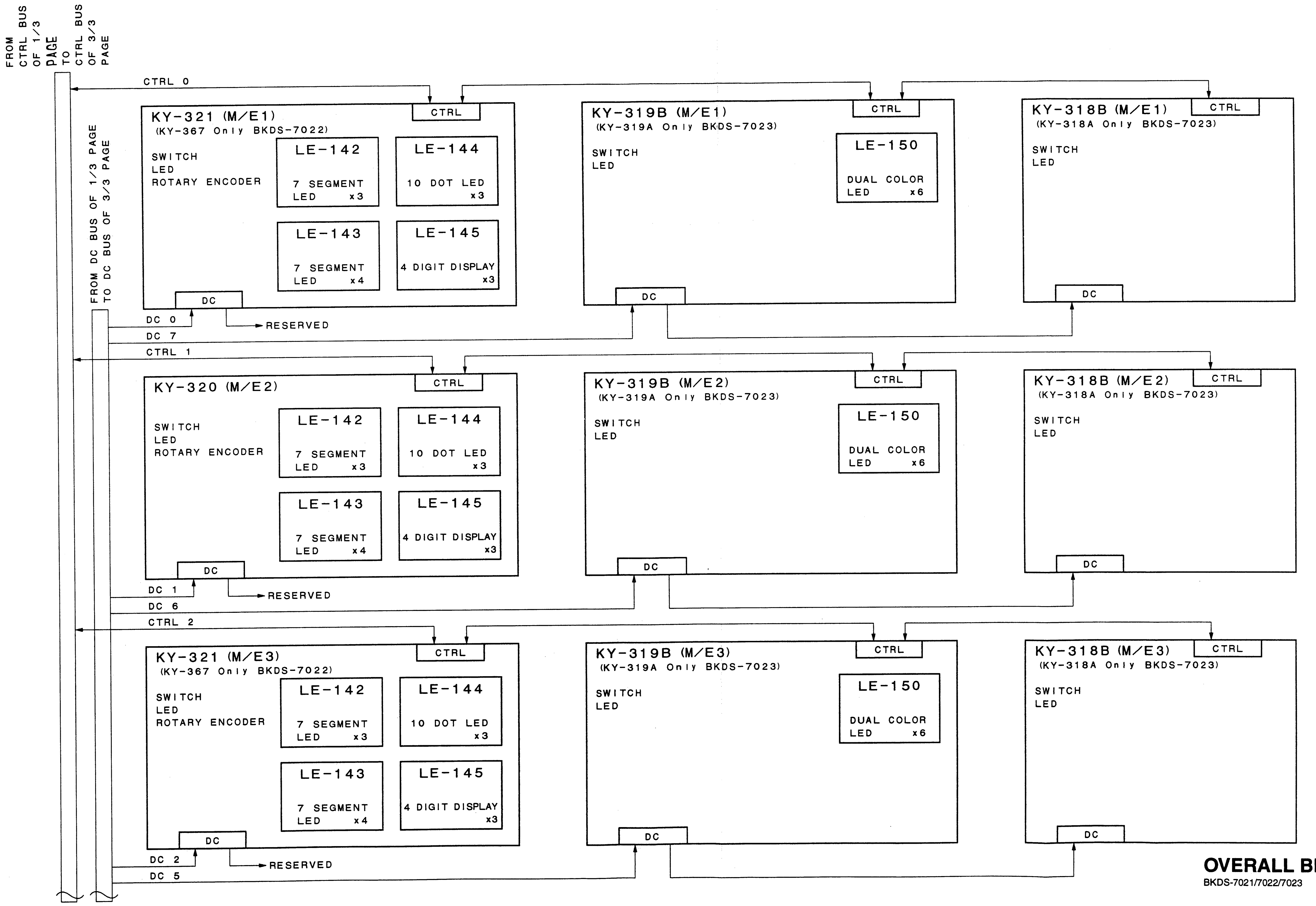

OVERALL BLOCK (2/3)
BKDS-7021/7022/7023

 BKDS-7021/7022/7023 OVERALL (3/3)

OVERALL BLOCK (3/3)

BKDS-7021/7022/7023
BKDS-7030/7031

BKDS-7021/7022/7023 FRAME WIRING

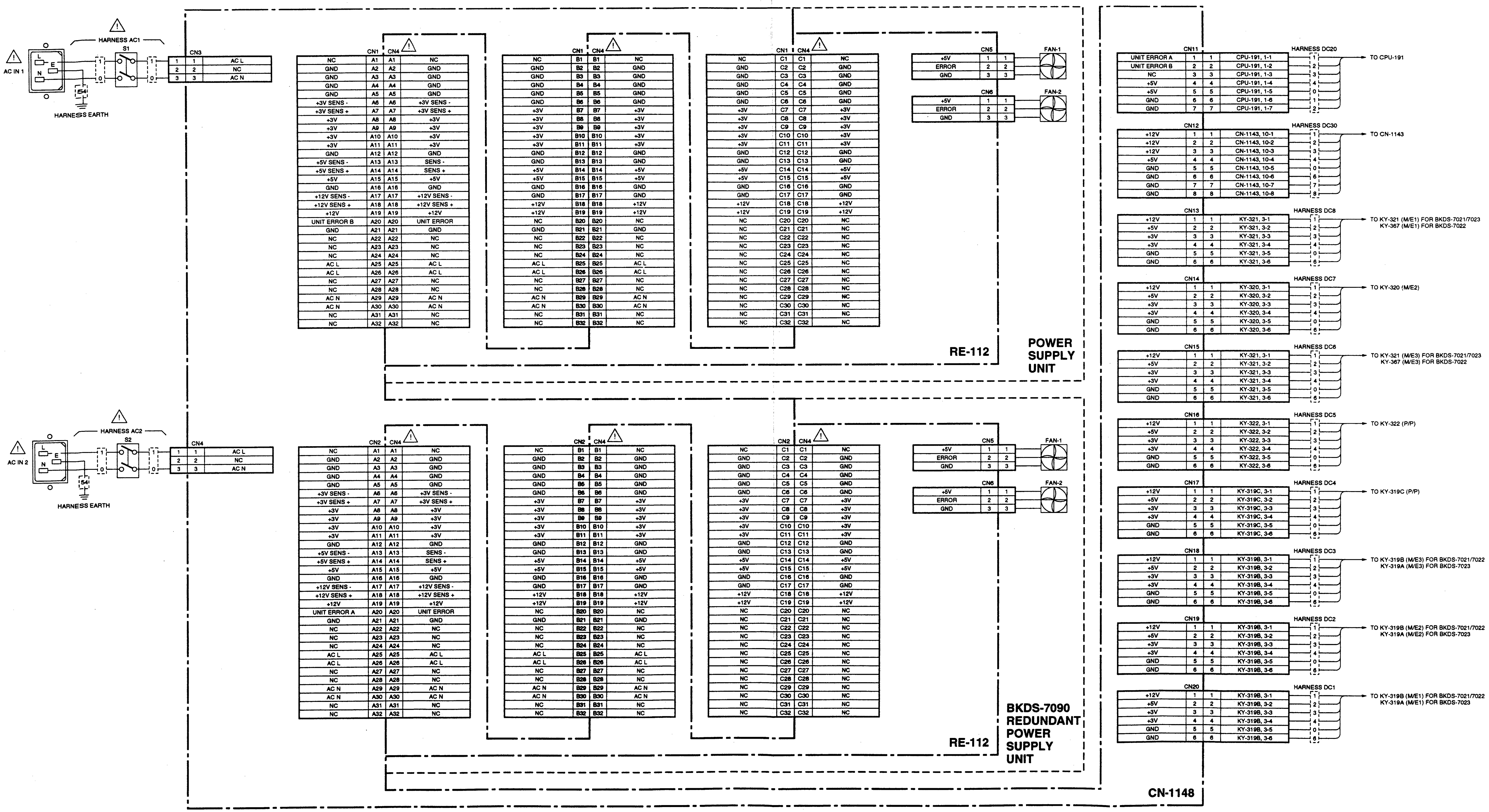

FRAME WIRING (1/10)

BKDS-7021/7022/7023
BKDS-7090

 BKDS-7021/7022/7023 FRAME (2/10)

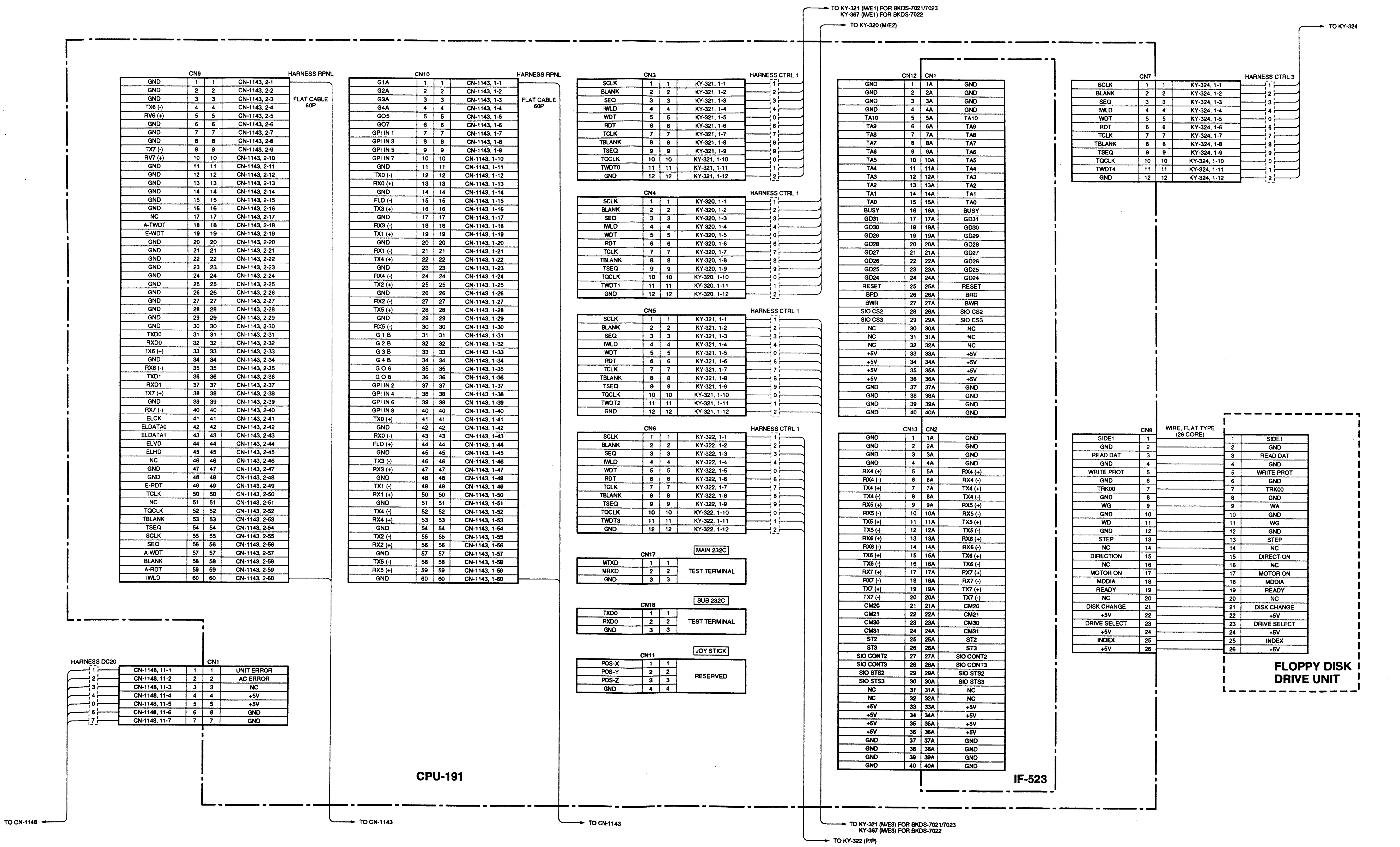

FRAME WIRING (2/10)

BKDS-7021/7022/7023

 BKDS-7021/7022/7023 FRAME (3/10)

TO CPU-191 — HARNESS RPNL — FLAT CABLE 60P

CN2

CPU-191, 9-1	1	1	GND
CPU-191, 9-2	2	2	GND
CPU-191, 9-3	3	3	GND
CPU-191, 9-4	4	4	TX6 (-)
CPU-191, 9-5	5	5	RX6 (+)
CPU-191, 9-6	6	6	GND
CPU-191, 9-7	7	7	GND
CPU-191, 9-8	8	8	GND
CPU-191, 9-9	9	9	TX7 (-)
CPU-191, 9-10	10	10	RX7 (+)
CPU-191, 9-11	11	11	GND
CPU-191, 9-12	12	12	GND
CPU-191, 9-13	13	13	GND
CPU-191, 9-14	14	14	GND
CPU-191, 9-15	15	15	GND
CPU-191, 9-16	16	16	GND
CPU-191, 9-17	17	17	NC
CPU-191, 9-18	18	18	A-TWDT
CPU-191, 9-19	19	19	E-WDT
CPU-191, 9-20	20	20	GND
CPU-191, 9-21	21	21	GND
CPU-191, 9-22	22	22	GND
CPU-191, 9-23	23	23	GND
CPU-191, 9-24	24	24	GND
CPU-191, 9-25	25	25	GND
CPU-191, 9-26	26	26	GND
CPU-191, 9-27	27	27	GND
CPU-191, 9-28	28	28	GND
CPU-191, 9-29	29	29	GND
CPU-191, 9-30	30	30	GND
CPU-191, 9-31	31	31	TXD0
CPU-191, 9-32	32	32	RXD0
CPU-191, 9-33	33	33	TX6 (+)
CPU-191, 9-34	34	34	GND
CPU-191, 9-35	35	35	RX6 (-)
CPU-191, 9-36	36	36	TXD1
CPU-191, 9-37	37	37	RXD1
CPU-191, 9-38	38	38	TX7 (+)
CPU-191, 9-39	39	39	GND
CPU-191, 9-40	40	40	RX7 (-)
CPU-191, 9-41	41	41	ELCK
CPU-191, 9-42	42	42	EL DATA 0
CPU-191, 9-43	43	43	EL DATA 1
CPU-191, 9-44	44	44	ELVD
CPU-191, 9-45	45	45	ELHD
CPU-191, 9-46	46	46	NC
CPU-191, 9-47	47	47	GND
CPU-191, 9-48	48	48	GND
CPU-191, 9-49	49	49	E-RDT
CPU-191, 9-50	50	50	TCLK
CPU-191, 9-51	51	51	NC
CPU-191, 9-52	52	52	TQCLK
CPU-191, 9-53	53	53	TBLANK
CPU-191, 9-54	54	54	TSEQ
CPU-191, 9-55	55	55	SCLK
CPU-191, 9-56	56	56	SEQ
CPU-191, 9-57	57	57	A-WDT
CPU-191, 9-58	58	58	BLANK
CPU-191, 9-59	59	59	A-RDT
CPU-191, 9-60	60	60	IWLD

TO CPU-191 — HARNESS RPNL — FLAT CABLE 60P

CN1

CPU-191, 10-1	1	1	GPI OUT 1A
CPU-191, 10-2	2	2	GPI OUT 2A
CPU-191, 10-3	3	3	GPI OUT 3A
CPU-191, 10-4	4	4	GPI OUT 4A
CPU-191, 10-5	5	5	GPI OUT 5
CPU-191, 10-6	6	6	GPI OUT 7
CPU-191, 10-7	7	7	GPI IN 1
CPU-191, 10-8	8	8	GPI IN 3
CPU-191, 10-9	9	9	GPI IN 5
CPU-191, 10-10	10	10	GPI IN 7
CPU-191, 10-11	11	11	GND
CPU-191, 10-12	12	12	TX0 (+)
CPU-191, 10-13	13	13	RX0 (+)
CPU-191, 10-14	14	14	GND
CPU-191, 10-15	15	15	FLD (-)
CPU-191, 10-16	16	16	TX3 (+)
CPU-191, 10-17	17	17	GND
CPU-191, 10-18	18	18	RX3 (-)
CPU-191, 10-19	19	19	TX1 (+)
CPU-191, 10-20	20	20	GND
CPU-191, 10-21	21	21	RX1 (-)
CPU-191, 10-22	22	22	TX4 (+)
CPU-191, 10-23	23	23	GND
CPU-191, 10-24	24	24	RX4 (-)
CPU-191, 10-25	25	25	TX2 (+)
CPU-191, 10-26	26	26	GND
CPU-191, 10-27	27	27	RX2 (-)
CPU-191, 10-28	28	28	TX5 (+)
CPU-191, 10-29	29	29	GND
CPU-191, 10-30	30	30	RX5 (-)
CPU-191, 10-31	31	31	GPI OUT 1B
CPU-191, 10-32	32	32	GPI OUT 2B
CPU-191, 10-33	33	33	GPI OUT 3B
CPU-191, 10-34	34	34	GPI OUT 4B
CPU-191, 10-35	35	35	GPI OUT 6
CPU-191, 10-36	36	36	GPI OUT 8
CPU-191, 10-37	37	37	GPI IN 2
CPU-191, 10-38	38	38	GPI IN 4
CPU-191, 10-39	39	39	GPI IN 6
CPU-191, 10-40	40	40	GPI IN 8
CPU-191, 10-41	41	41	TX0 (+)
CPU-191, 10-42	42	42	GND
CPU-191, 10-43	43	43	RX0 (-)
CPU-191, 10-44	44	44	FLD (+)
CPU-191, 10-45	45	45	GND
CPU-191, 10-46	46	46	TX3 (-)
CPU-191, 10-47	47	47	RX3 (+)
CPU-191, 10-48	48	48	GND
CPU-191, 10-49	49	49	TX1 (-)
CPU-191, 10-50	50	50	RX1 (+)
CPU-191, 10-51	51	51	GND
CPU-191, 10-52	52	52	TX4 (-)
CPU-191, 10-53	53	53	RX4 (+)
CPU-191, 10-54	54	54	GND
CPU-191, 10-55	55	55	TX2 (-)
CPU-191, 10-56	56	56	RX2 (+)
CPU-191, 10-57	57	57	GND
CPU-191, 10-58	58	58	TX5 (-)
CPU-191, 10-59	59	59	RX5 (+)
CPU-191, 10-60	60	60	GND

TO CN-1148 — HARNESS DC30

CN10

0	CN-1148, 12-1	1	1	+12V
1	CN-1148, 12-2	2	2	+12V
2	CN-1148, 12-3	3	3	+12V
3	CN-1148, 12-4	4	4	+5V
4	CN-1148, 12-5	5	5	GND
0	CN-1148, 12-6	6	6	GND
6	CN-1148, 12-7	7	7	GND
7	CN-1148, 12-8	8	8	GND

CN18 OPTION IN

RESERVED	1	1	SCLK
	2	2	BLANK
	3	3	SEQ
	4	4	IWLD
	5	5	WDT
	6	6	RDT
	7	7	TCLK
	8	8	TBLANK
	9	9	TSEQ
	10	10	TQCLK
	11	11	TWDT
	12	12	GND

CN16 — DISPLAY PANEL D-SUB 25PIN FEMALE

GND	1
+12V	2
SCLK	3
GND	4
WDT	5
IWLD	6
GND	7
ELCK	8
EL DATA 0	9
GND	10
ELVD	11
GND	12
GND	13
+12V	14
+12V	15
BLANK	16
GND	17
SEQ	18
RDT	19
GND	20
ELHD	21
EL DATA 1	22
+12V	23
+12V	24
GND	25

CN3 — GPI D-SUB 25PIN FEMALE

GND	1
GND	2
GPI IN 2	3
GPI IN 4	4
GPI IN 6	5
GPI IN 8	6
GPI OUT 1B	7
GPI OUT 2B	8
GPI OUT 3B	9
GPI OUT 4B	10
GPI OUT 6	11
GPI OUT 8	12
GND	13
GND	14
GPI IN 1	15
GPI IN 3	16
GPI IN 5	17
GPI IN 7	18
GPI OUT 1A	19
GPI OUT 2A	20
GPI OUT 3A	21
GPI OUT 4A	22
GPI OUT 5	23
GPI OUT 7	24
GND	25

CN9 — AUX PANEL D-SUB 25PIN FEMALE

GND	1
+12V	2
SCLK	3
GND	4
WDT	5
IWLD	6
GND	7
TCLK	8
TWDT	9
GND	10
TBLANK	11
GND	12
GND	13
+12V	14
+12V	15
BLANK	16
GND	17
SEQ	18
RDT	19
GND	20
TSEQ	21
TQCLK	22
+12V	23
+12V	24
GND	25

CN17 — OPTION PANEL D-SUB 25PIN FEMALE

GND	1
+12V	2
SCLK	3
GND	4
WDT	5
IWLD	6
GND	7
TCLK	8
TWDT	9
GND	10
TBLANK	11
GND	12
GND	13
+12V	14
+12V	15
BLANK	16
GND	17
SEQ	18
RDT	19
GND	20
TSEQ	21
TQCLK	22
+12V	23
+12V	24
GND	25

CN4 — SWITCHER D-SUB 9PIN FEMALE

GND	1
RX 0 (-)	2
TX 0 (+)	3
GND	4
FLD (+)	5
GND	6
RX 0 (+)	7
TX 0 (-)	8
FLD (-)	9

CN12 — REMOTE 2 D-SUB 9PIN FEMALE

GND	1
RX 4 (-)	2
TX 4 (+)	3
GND	4
NC	5
GND	6
RX 4 (+)	7
TX 4 (-)	8
NC	9

CN5 — DSK D-SUB 9PIN FEMALE

GND	1
RX 1 (-)	2
TX 1 (+)	3
GND	4
NC	5
GND	6
RX 1 (+)	7
TX 1 (-)	8
NC	9

CN13 — REMOTE 3 D-SUB 9PIN FEMALE

GND	1
RX 5 (-)	2
TX 5 (+)	3
GND	4
NC	5
GND	6
RX 5 (+)	7
TX 5 (-)	8
NC	9

CN6 — DME D-SUB 9PIN FEMALE

GND	1
RX 2 (-)	2
TX 2 (+)	3
GND	4
NC	5
GND	6
RX 2 (+)	7
TX 2 (-)	8
NC	9

CN14 — REMOTE 4 D-SUB 9PIN FEMALE

GND	1
RX 6 (-)	2
TX 6 (+)	3
GND	4
NC	5
GND	6
RX 6 (+)	7
TX 6 (-)	8
NC	9

CN11 — REMOTE 1 D-SUB 9PIN FEMALE

GND	1
RX 3 (-)	2
TX 3 (+)	3
GND	4
NC	5
GND	6
RX 3 (+)	7
TX 3 (-)	8
NC	9

CN15 — REMOTE 5 D-SUB 9PIN FEMALE

GND	1
RX 7 (-)	2
TX 7 (+)	3
GND	4
NC	5
GND	6
RX 7 (+)	7
TX 7 (-)	8
NC	9

CN7 — TERMINAL 1 D-SUB 9PIN FEMALE

DCD0	1
RXD0	2
TXD0	3
DTR0	4
GND	5
DSR0	6
RTS0	7
CTS0	8
RI0	9

CN8 — TERMINAL 2 D-SUB 9PIN FEMALE

DCD1	1
RXD1	2
TXD1	3
DTR1	4
GND	5
DSR1	6
RTS1	7
CTS1	8
RI1	9

CN-1143

FRAME WIRING (3/10)

BKDS-7021/7022/7023

BKDS-7021/7022/7023 FRAME (4/10)

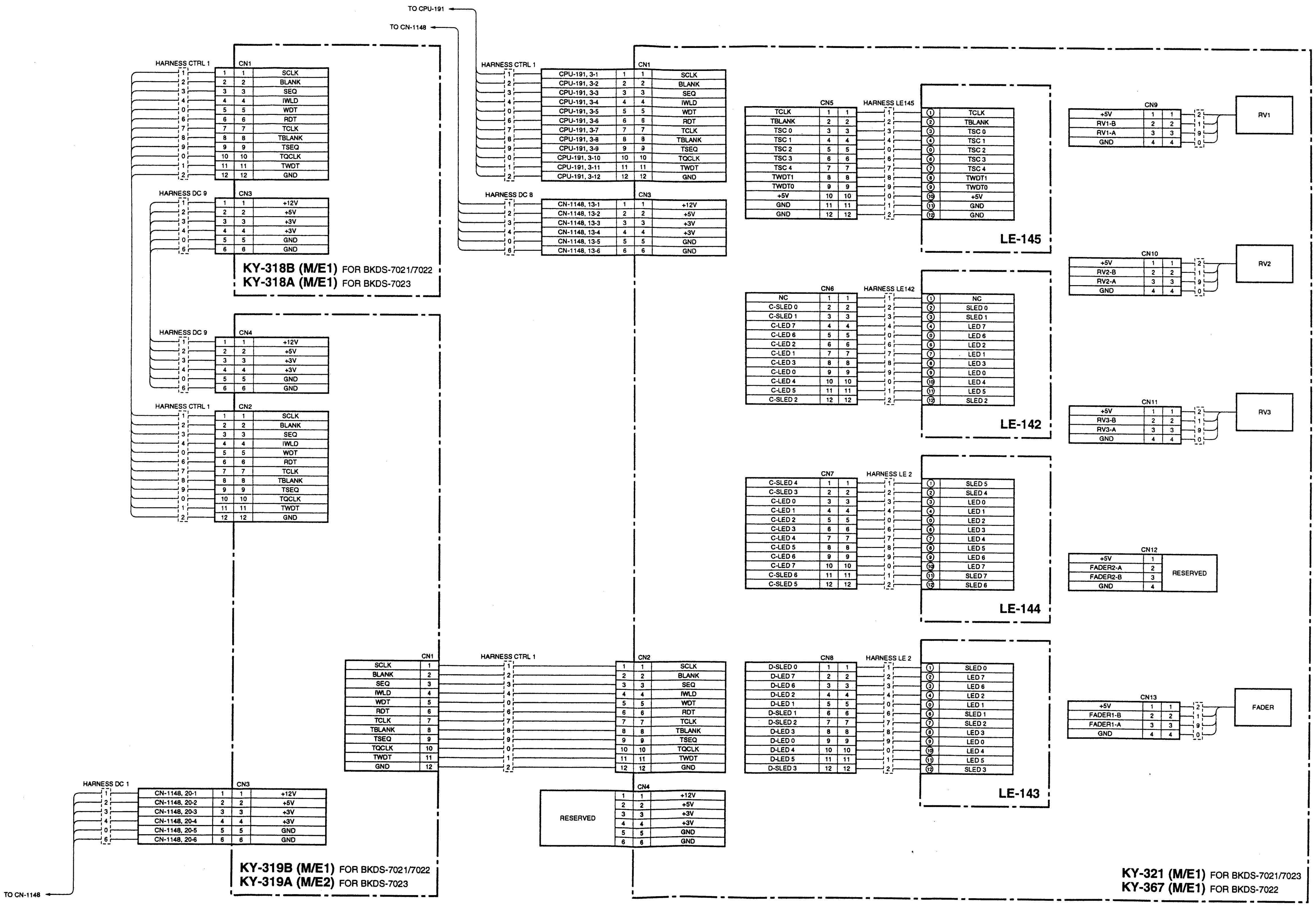

FRAME WIRING (4/10)

BKDS-7021/7022/7023

2-30

 BKDS-7021/7022/7023 FRAME (5/10)

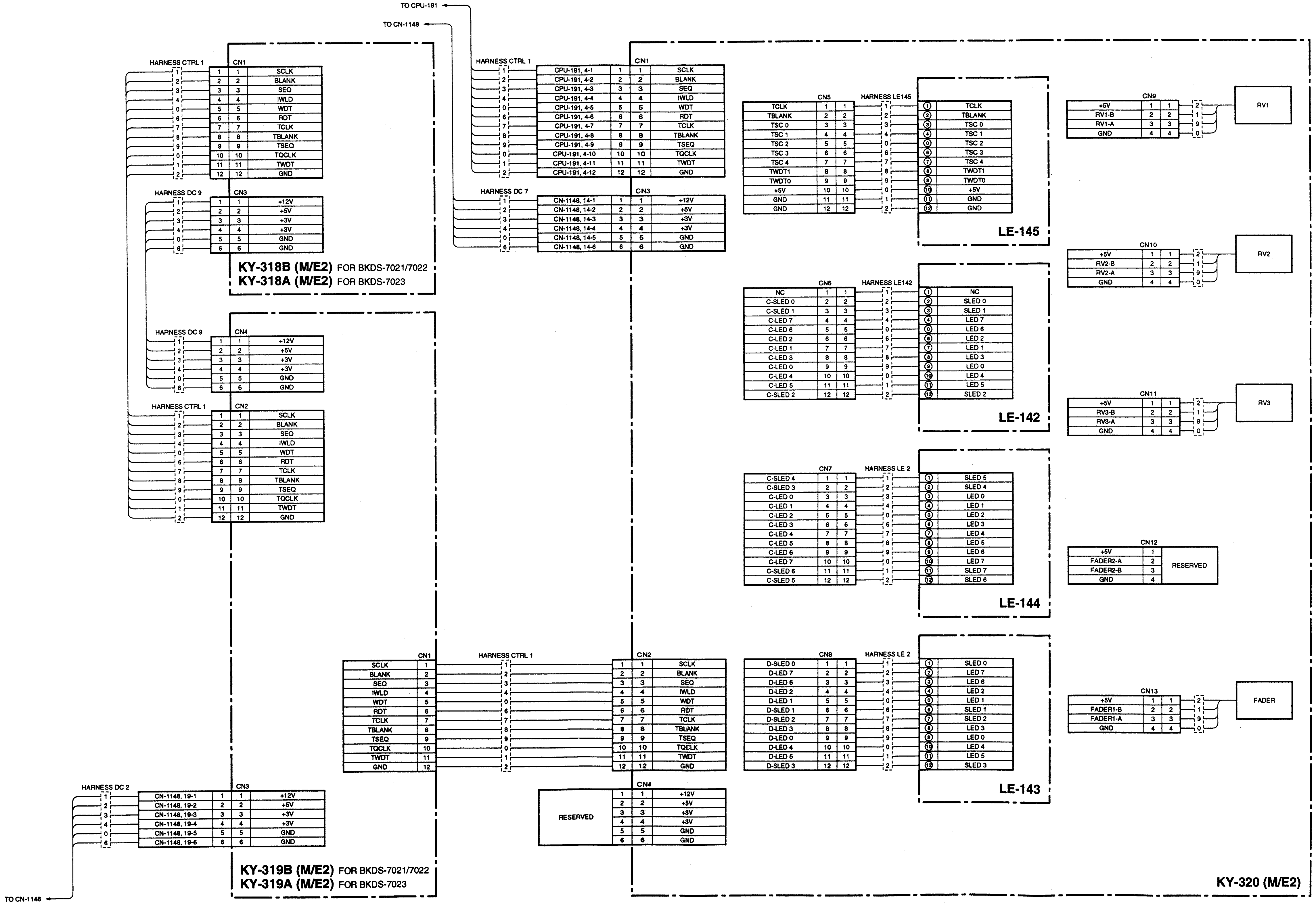

FRAME WIRING (5/10)

BKDS-7021/7022/7023

 BKDS-7021/7022/7023 FRAME (6/10)

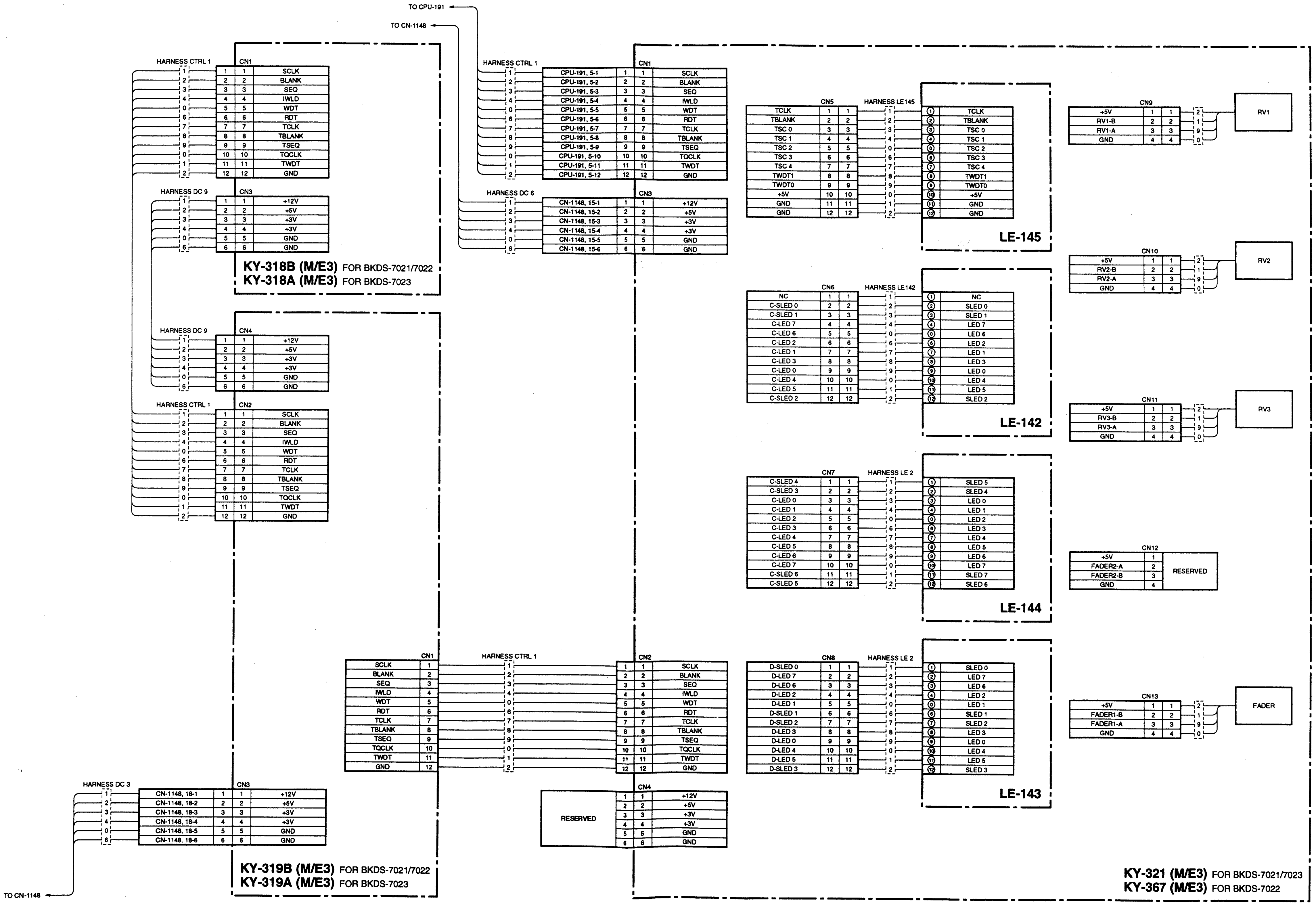

FRAME WIRING (6/10)

BKDS-7021/7022/7023

 BKDS-7021/7022/7023 FRAME (7/10)

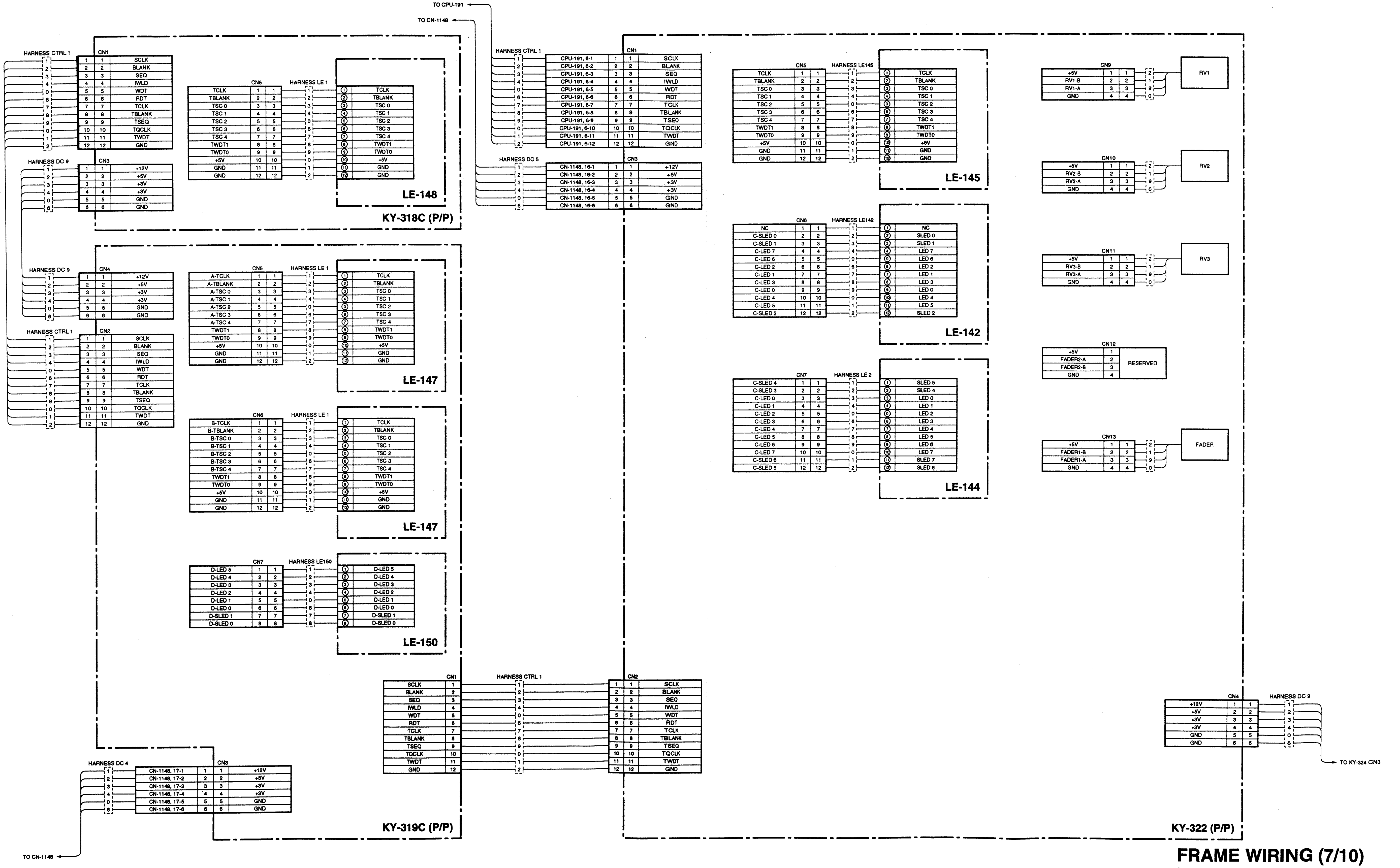

FRAME WIRING (7/10)

BKDS-7021/7022/7023

 BKDS-7021/7022/7023 FRAME (8/10)

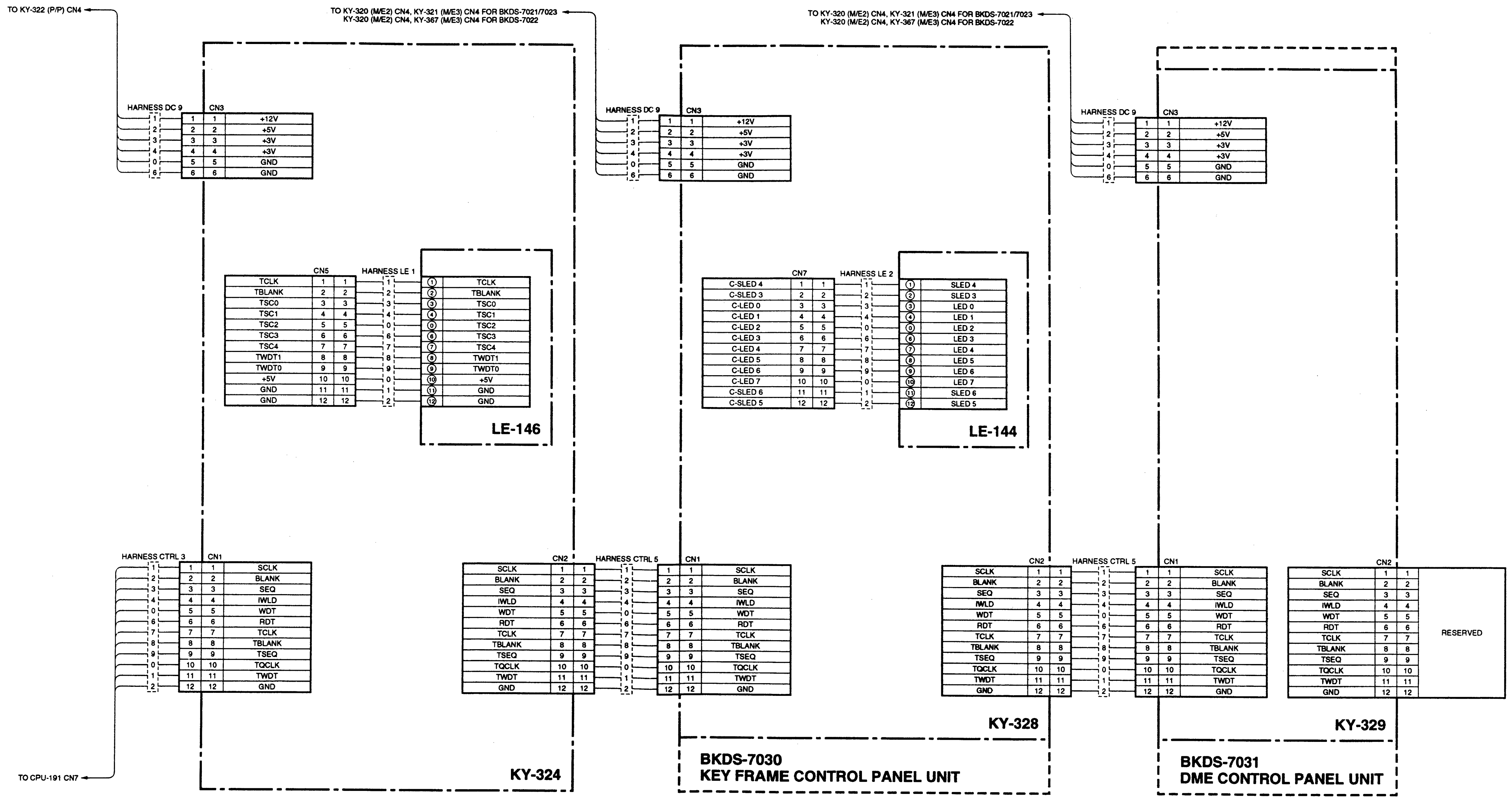

FRAME WIRING (8/10)

BKDS-7021/7022/7023
BKDS-7030/7031

 BKDS-7021/7022/7023 FRAME (9/10)

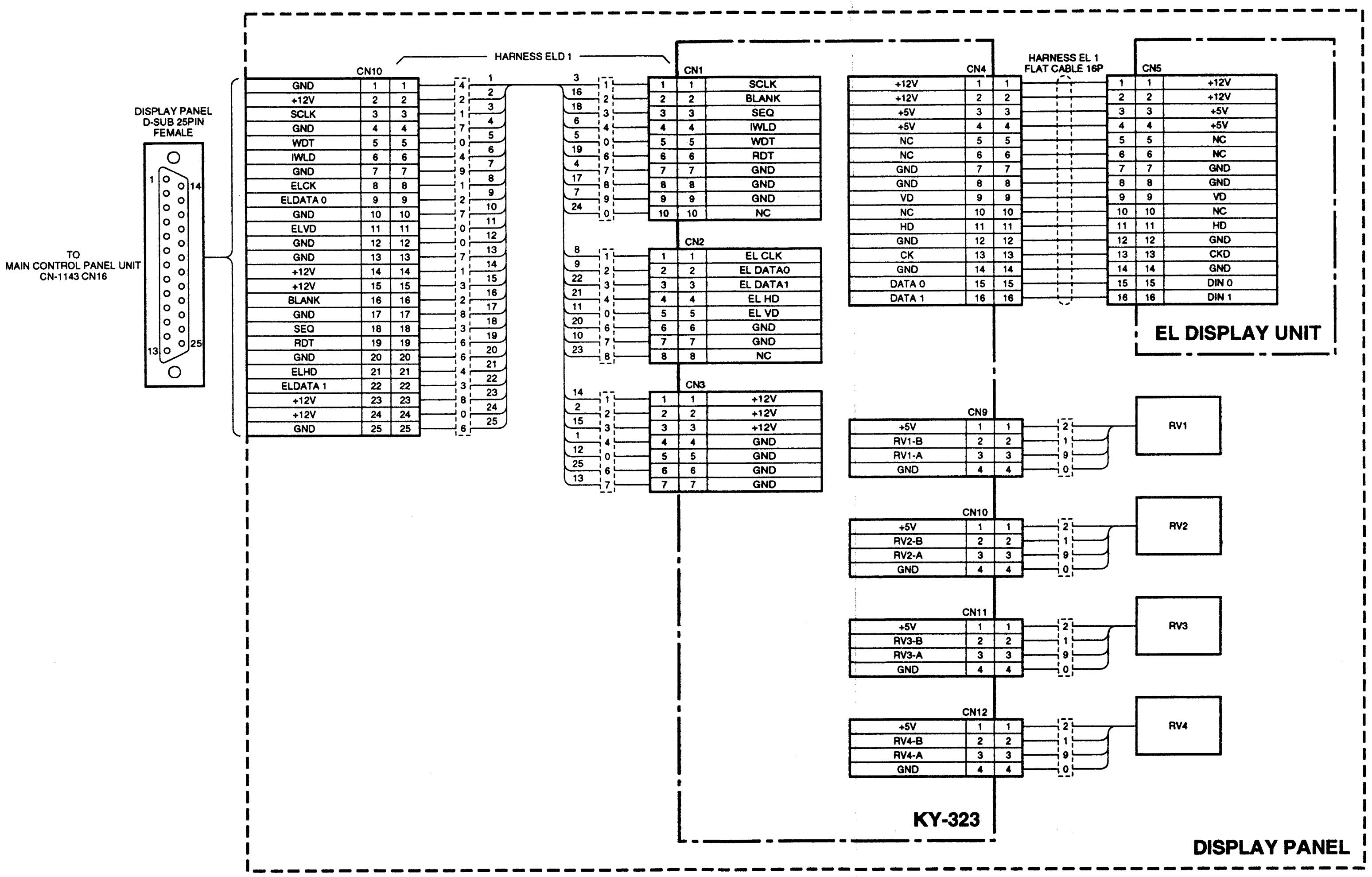

FRAME WIRING (9/10)

BKDS-7021/7022/7023

 2-35

BKDS-7021/7022/7023 FRAME (10/10)

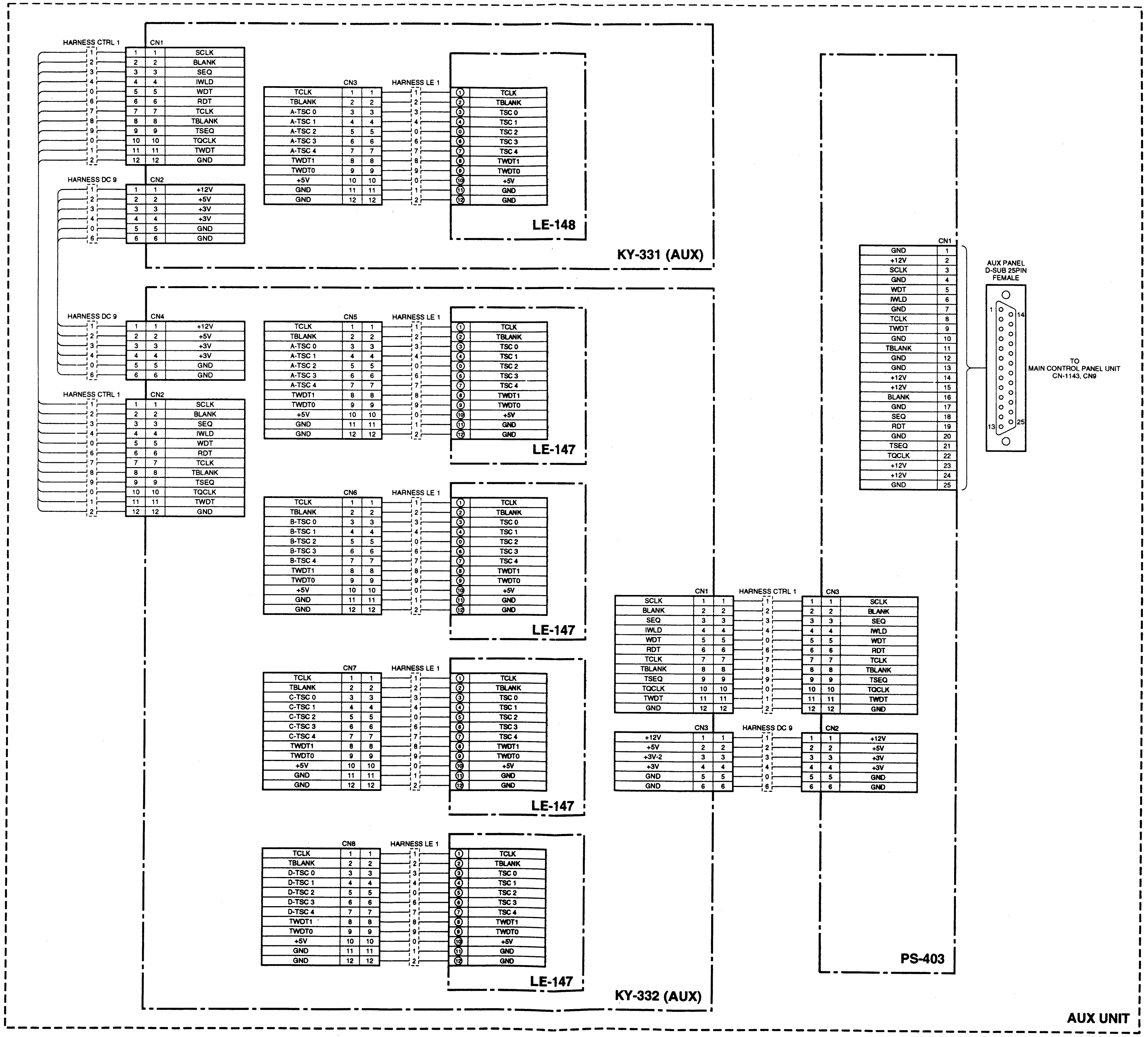

FRAME WIRING (10/10)

BKDS-7021/7022/7023

2-36

 BKDS-701xR/701xLR OVERALL (1/3)

2-6. BKDS-701xR/701xLR
BKDS-701xR/701xLR OVERALL BLOCK

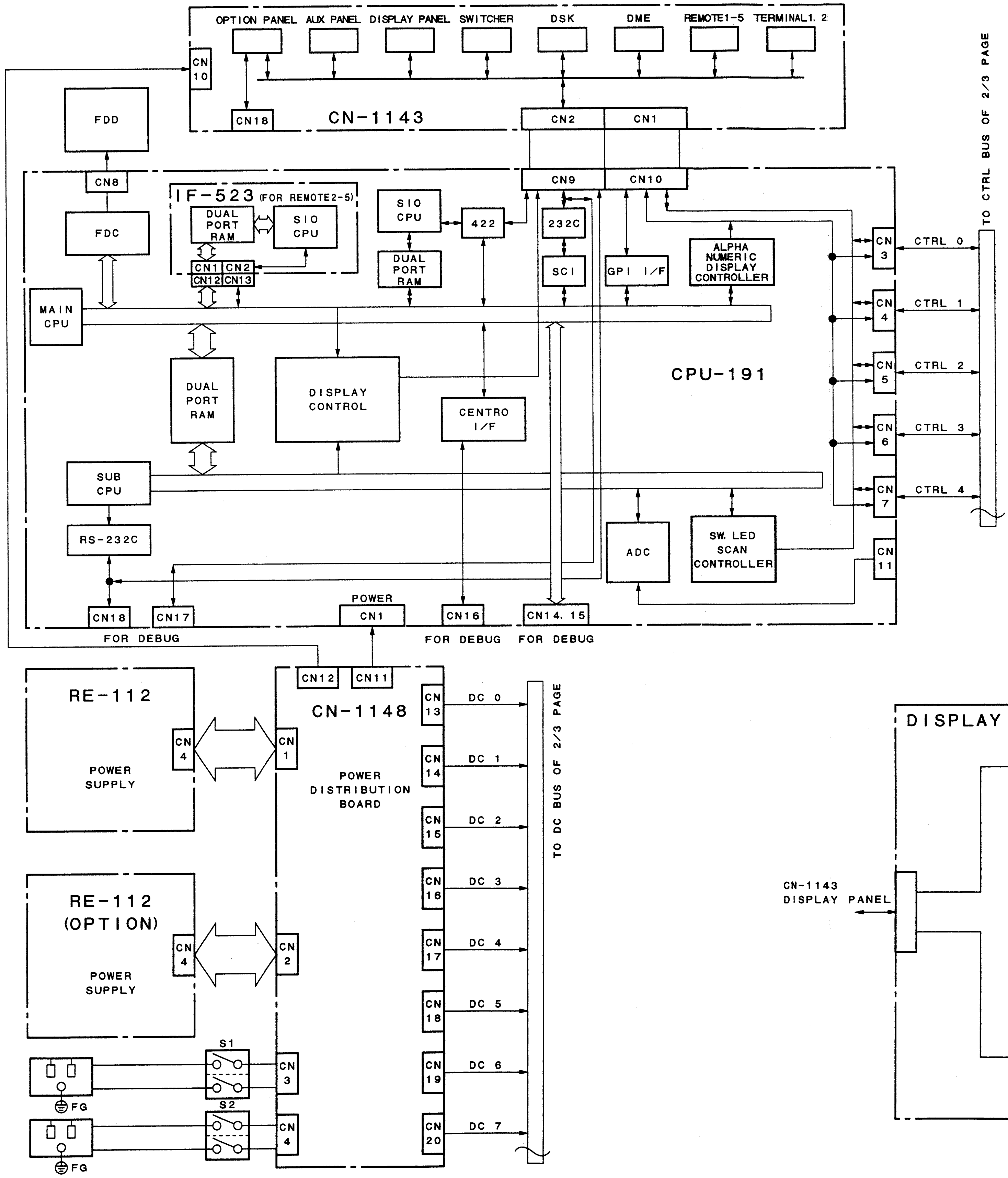

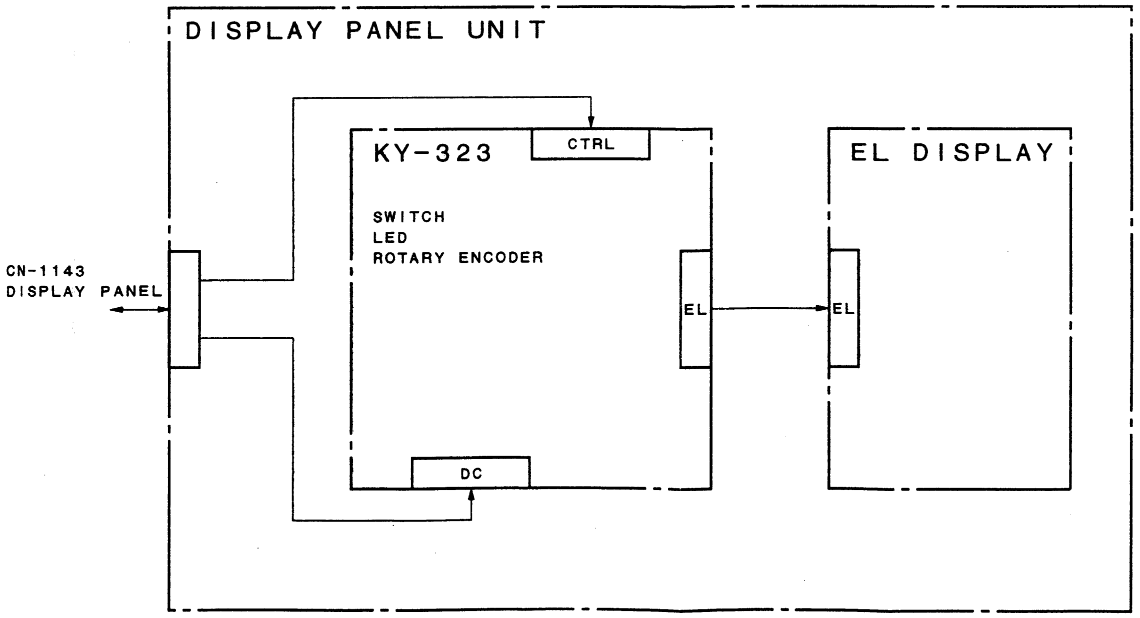

OVERALL BLOCK (1/3)
BKDS-7001/701xR/701xLR/7090

 2-37

 BKDS-701xR/701xLR OVERALL (2/3)

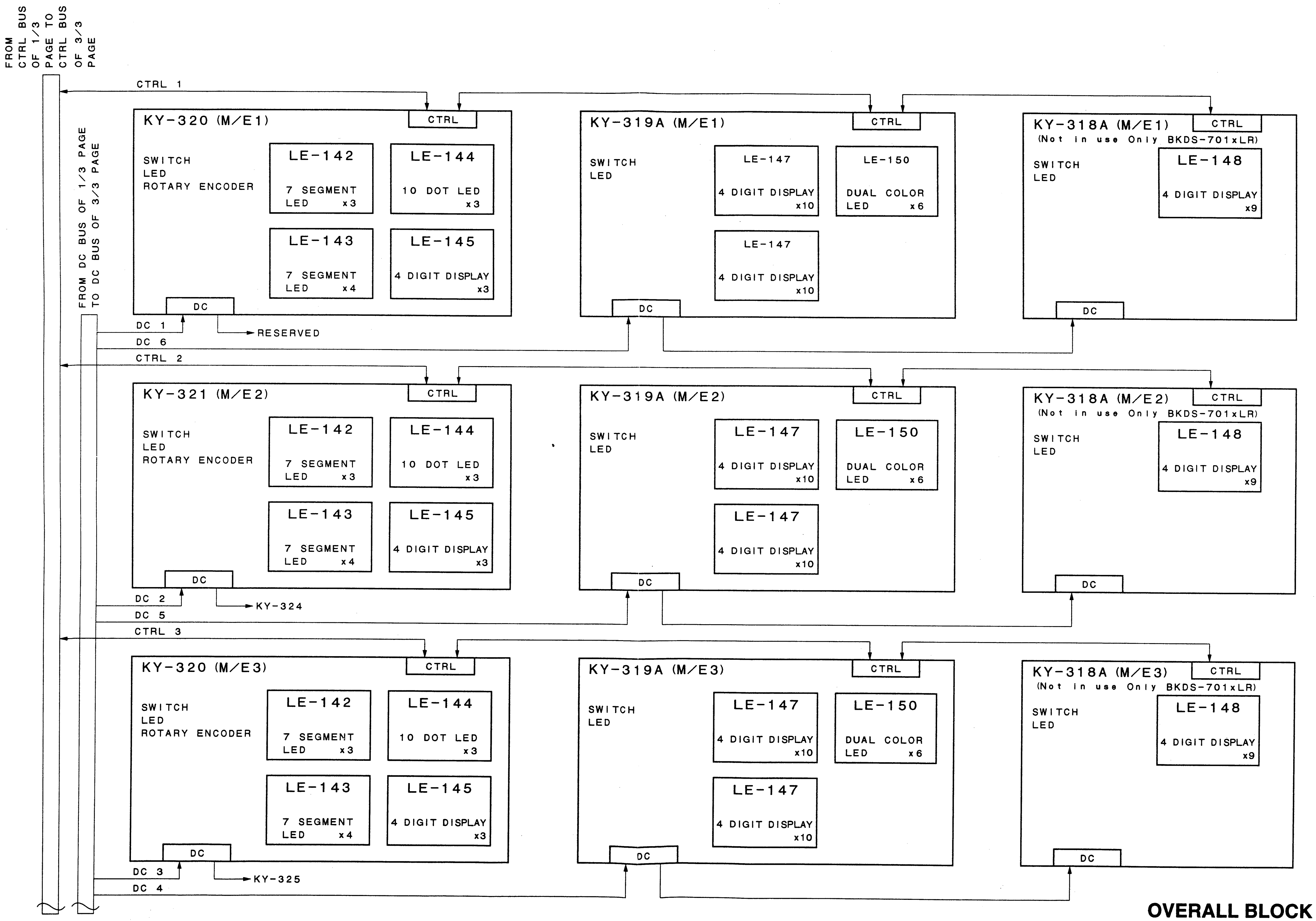

OVERALL BLOCK (2/3)

BKDS-7001/701xR/701xLR/7090

 BKDS-701xR/701xLR OVERALL (3/3)

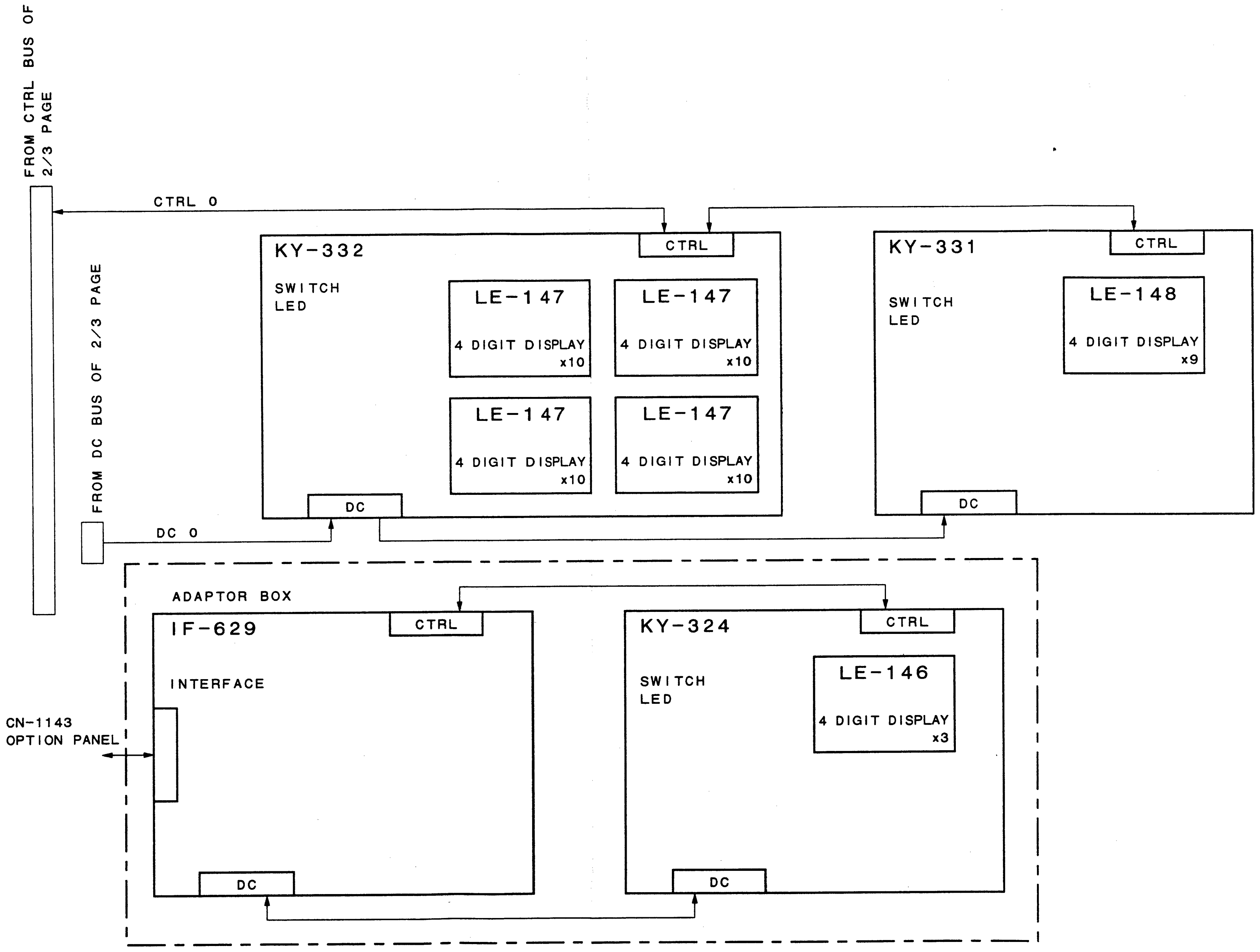

OVERALL BLOCK (3/3)

BKDS-7001/701xR/701xLR/7090

BKDS-701xR/701xLR FRAME (1/9)

BKDS-701xR/701xLR FRAME WIRING

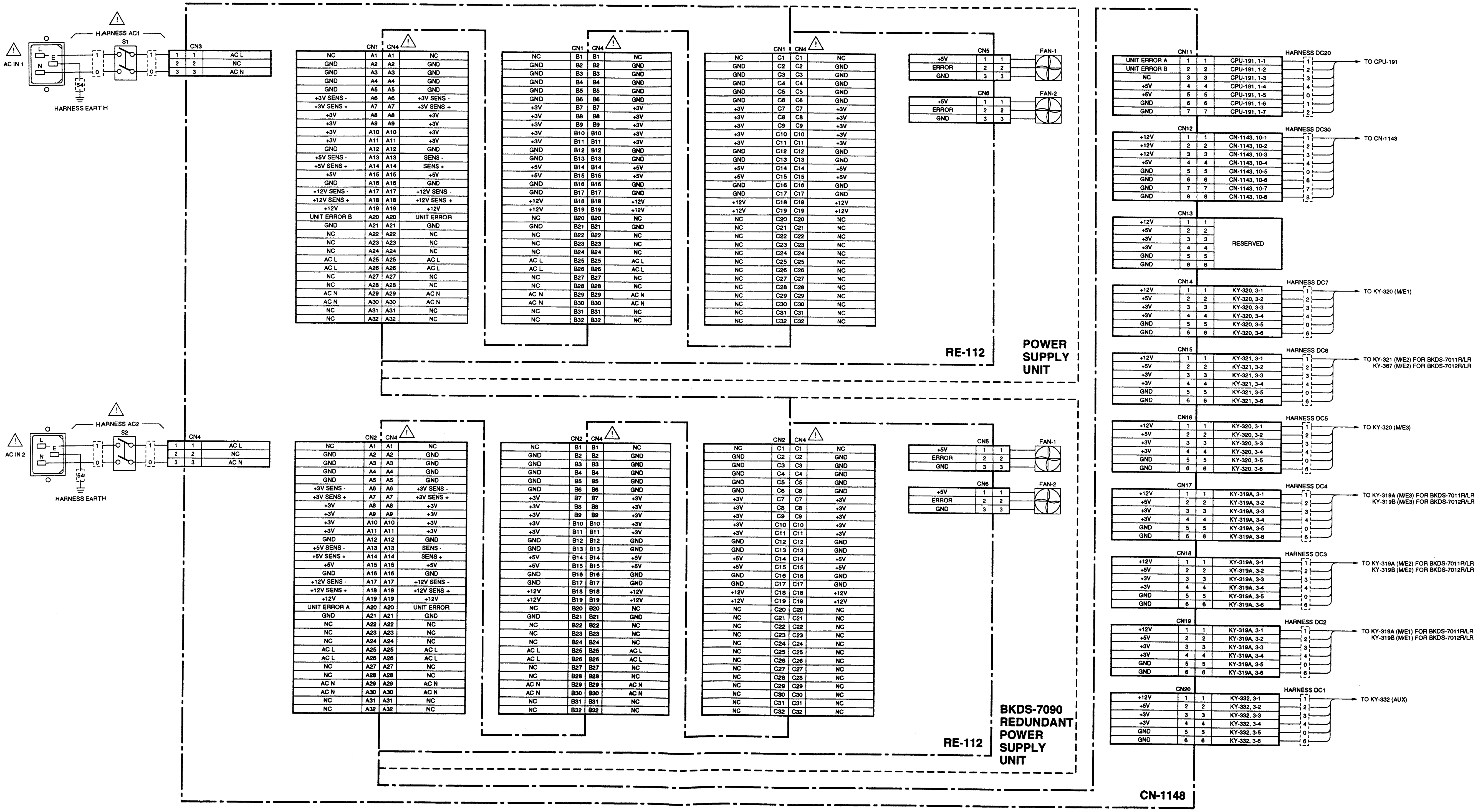

FRAME WIRING (1/9)

BKDS-701xR/701xLR
BKDS-7090

2-40

 BKDS-701xR/701xLR FRAME (2/9)

TO KY-332 (AUX)
TO KY-320 (M/E1)
TO CN-1143

CPU-191

CN9 — HARNESS RPNL — FLAT CABLE 60P — TO CN-1143

Signal	CN9		Destination
GND	1	1	CN-1143, 2-1
GND	2	2	CN-1143, 2-2
GND	3	3	CN-1143, 2-3
TX6 (-)	4	4	CN-1143, 2-4
RV6 (+)	5	5	CN-1143, 2-5
GND	6	6	CN-1143, 2-6
GND	7	7	CN-1143, 2-7
GND	8	8	CN-1143, 2-8
TX7 (-)	9	9	CN-1143, 2-9
RV7 (+)	10	10	CN-1143, 2-10
GND	11	11	CN-1143, 2-11
GND	12	12	CN-1143, 2-12
GND	13	13	CN-1143, 2-13
GND	14	14	CN-1143, 2-14
GND	15	15	CN-1143, 2-15
GND	16	16	CN-1143, 2-16
NC	17	17	CN-1143, 2-17
A-TWDT	18	18	CN-1143, 2-18
E-WDT	19	19	CN-1143, 2-19
GND	20	20	CN-1143, 2-20
GND	21	21	CN-1143, 2-21
GND	22	22	CN-1143, 2-22
GND	23	23	CN-1143, 2-23
GND	24	24	CN-1143, 2-24
GND	25	25	CN-1143, 2-25
GND	26	26	CN-1143, 2-26
GND	27	27	CN-1143, 2-27
GND	28	28	CN-1143, 2-28
GND	29	29	CN-1143, 2-29
GND	30	30	CN-1143, 2-30
TXD0	31	31	CN-1143, 2-31
RXD0	32	32	CN-1143, 2-32
TX6 (+)	33	33	CN-1143, 2-33
GND	34	34	CN-1143, 2-34
RX6 (-)	35	35	CN-1143, 2-35
TXD1	36	36	CN-1143, 2-36
RXD1	37	37	CN-1143, 2-37
TX7 (+)	38	38	CN-1143, 2-38
GND	39	39	CN-1143, 2-39
RX7 (-)	40	40	CN-1143, 2-40
ELCK	41	41	CN-1143, 2-41
ELDATA0	42	42	CN-1143, 2-42
ELDATA1	43	43	CN-1143, 2-43
ELVD	44	44	CN-1143, 2-44
ELHD	45	45	CN-1143, 2-45
NC	46	46	CN-1143, 2-46
GND	47	47	CN-1143, 2-47
GND	48	48	CN-1143, 2-48
E-RDT	49	49	CN-1143, 2-49
TCLK	50	50	CN-1143, 2-50
NC	51	51	CN-1143, 2-51
TQCLK	52	52	CN-1143, 2-52
TBLANK	53	53	CN-1143, 2-53
TSEQ	54	54	CN-1143, 2-54
SCLK	55	55	CN-1143, 2-55
SEQ	56	56	CN-1143, 2-56
A-WDT	57	57	CN-1143, 2-57
BLANK	58	58	CN-1143, 2-58
A-RDT	59	59	CN-1143, 2-59
IWLD	60	60	CN-1143, 2-60

CN10 — HARNESS RPNL — FLAT CABLE 60P — TO CN-1143

Signal	CN10		Destination
G1A	1	1	CN-1143, 1-1
G2A	2	2	CN-1143, 1-2
G3A	3	3	CN-1143, 1-3
G4A	4	4	CN-1143, 1-4
GO5	5	5	CN-1143, 1-5
GO7	6	6	CN-1143, 1-6
GPI IN 1	7	7	CN-1143, 1-7
GPI IN 3	8	8	CN-1143, 1-8
GPI IN 5	9	9	CN-1143, 1-9
GPI IN 7	10	10	CN-1143, 1-10
GND	11	11	CN-1143, 1-11
TX0 (-)	12	12	CN-1143, 1-12
RX0 (+)	13	13	CN-1143, 1-13
GND	14	14	CN-1143, 1-14
FLD (-)	15	15	CN-1143, 1-15
TX3 (+)	16	16	CN-1143, 1-16
GND	17	17	CN-1143, 1-17
RX3 (-)	18	18	CN-1143, 1-18
TX1 (+)	19	19	CN-1143, 1-19
GND	20	20	CN-1143, 1-20
RX1 (-)	21	21	CN-1143, 1-21
TX4 (+)	22	22	CN-1143, 1-22
GND	23	23	CN-1143, 1-23
RX4 (-)	24	24	CN-1143, 1-24
TX2 (+)	25	25	CN-1143, 1-25
GND	26	26	CN-1143, 1-26
RX2 (-)	27	27	CN-1143, 1-27
TX5 (+)	28	28	CN-1143, 1-28
GND	29	29	CN-1143, 1-29
RX5 (-)	30	30	CN-1143, 1-30
G 1 B	31	31	CN-1143, 1-31
G 2 B	32	32	CN-1143, 1-32
G 3 B	33	33	CN-1143, 1-33
G 4 B	34	34	CN-1143, 1-34
G O 6	35	35	CN-1143, 1-35
G O 8	36	36	CN-1143, 1-36
GPI IN 2	37	37	CN-1143, 1-37
GPI IN 4	38	38	CN-1143, 1-38
GPI IN 6	39	39	CN-1143, 1-39
GPI IN 8	40	40	CN-1143, 1-40
TX0 (+)	41	41	CN-1143, 1-41
GND	42	42	CN-1143, 1-42
RX0 (-)	43	43	CN-1143, 1-43
FLD (+)	44	44	CN-1143, 1-44
GND	45	45	CN-1143, 1-45
TX3 (-)	46	46	CN-1143, 1-46
RX3 (+)	47	47	CN-1143, 1-47
GND	48	48	CN-1143, 1-48
TX1 (-)	49	49	CN-1143, 1-49
RX1 (+)	50	50	CN-1143, 1-50
GND	51	51	CN-1143, 1-51
TX4 (-)	52	52	CN-1143, 1-52
RX4 (+)	53	53	CN-1143, 1-53
GND	54	54	CN-1143, 1-54
TX2 (-)	55	55	CN-1143, 1-55
RX2 (+)	56	56	CN-1143, 1-56
GND	57	57	CN-1143, 1-57
TX5 (-)	58	58	CN-1143, 1-58
RX5 (+)	59	59	CN-1143, 1-59
GND	60	60	CN-1143, 1-60

CN3 — HARNESS CTRL 2 — TO KY-332 (AUX)

Signal	CN3		Destination	Harness
SCLK	1	1	KY-332, 1-1	1
BLANK	2	2	KY-332, 1-2	2
SEQ	3	3	KY-332, 1-3	3
IWLD	4	4	KY-332, 1-4	4
WDT	5	5	KY-332, 1-5	0
RDT	6	6	KY-332, 1-6	6
TCLK	7	7	KY-332, 1-7	7
TBLANK	8	8	KY-332, 1-8	8
TSEQ	9	9	KY-332, 1-9	9
TQCLK	10	10	KY-332, 1-10	0
TWDT0	11	11	KY-332, 1-11	1
GND	12	12	KY-332, 1-12	2

CN4 — HARNESS CTRL 1 — TO KY-320 (M/E1)

Signal	CN4		Destination	Harness
SCLK	1	1	KY-320, 1-1	1
BLANK	2	2	KY-320, 1-2	2
SEQ	3	3	KY-320, 1-3	3
IWLD	4	4	KY-320, 1-4	4
WDT	5	5	KY-320, 1-5	0
RDT	6	6	KY-320, 1-6	6
TCLK	7	7	KY-320, 1-7	7
TBLANK	8	8	KY-320, 1-8	8
TSEQ	9	9	KY-320, 1-9	9
TQCLK	10	10	KY-320, 1-10	0
TWDT1	11	11	KY-320, 1-11	1
GND	12	12	KY-320, 1-12	2

CN5 — HARNESS CTRL 1

Signal	CN5		Destination	Harness
SCLK	1	1	KY-321, 1-1	1
BLANK	2	2	KY-321, 1-2	2
SEQ	3	3	KY-321, 1-3	3
IWLD	4	4	KY-321, 1-4	4
WDT	5	5	KY-321, 1-5	0
RDT	6	6	KY-321, 1-6	6
TCLK	7	7	KY-321, 1-7	7
TBLANK	8	8	KY-321, 1-8	8
TSEQ	9	9	KY-321, 1-9	9
TQCLK	10	10	KY-321, 1-10	0
TWDT2	11	11	KY-321, 1-11	1
GND	12	12	KY-321, 1-12	2

CN6 — HARNESS CTRL 1

Signal	CN6		Destination	Harness
SCLK	1	1	KY-320, 1-1	1
BLANK	2	2	KY-320, 1-2	2
SEQ	3	3	KY-320, 1-3	3
IWLD	4	4	KY-320, 1-4	4
WDT	5	5	KY-320, 1-5	0
RDT	6	6	KY-320, 1-6	6
TCLK	7	7	KY-320, 1-7	7
TBLANK	8	8	KY-320, 1-8	8
TSEQ	9	9	KY-320, 1-9	9
TQCLK	10	10	KY-320, 1-10	0
TWDT3	11	11	KY-320, 1-11	1
GND	12	12	KY-320, 1-12	2

MAIN 232C — CN17

Signal	CN17		
MTXD	1	1	TEST TERMINAL
MRXD	2	2	
GND	3	3	

SUB 232C — CN18

Signal	CN18		
TXD0	1	1	TEST TERMINAL
RXD0	2	2	
GND	3	3	

JOY STICK — CN11

Signal	CN11		
POS-X	1	1	RESERVED
POS-Y	2	2	
POS-Z	3	3	
GND	4	4	

HARNESS DC20 — CN1 — TO CN-1148

Harness	Source		CN1	Signal
1	CN-1148, 11-1	1	1	UNIT ERROR
2	CN-1148, 11-2	2	2	AC ERROR
3	CN-1148, 11-3	3	3	NC
4	CN-1148, 11-4	4	4	+5V
0	CN-1148, 11-5	5	5	+5V
6	CN-1148, 11-6	6	6	GND
7	CN-1148, 11-7	7	7	GND

CN7 — HARNESS CTRL 7 — TO CN-1143

Signal	CN7		Destination	Harness
SCLK	1	1	CN-1443, 18-1	1
BLANK	2	2	CN-1443, 18-2	2
SEQ	3	3	CN-1443, 18-3	3
IWLD	4	4	CN-1443, 18-4	4
WDT	5	5	CN-1443, 18-5	0
RDT	6	6	CN-1443, 18-6	6
TCLK	7	7	CN-1443, 18-7	7
TBLANK	8	8	CN-1443, 18-8	8
TSEQ	9	9	CN-1443, 18-9	9
TQCLK	10	10	CN-1443, 18-10	0
TWDT4	11	11	CN-1443, 18-11	1
GND	12	12	CN-1443, 18-12	2

IF-523

CPU-191 Signal	CN12	CN1	IF-523 Signal
GND	1	1A	GND
GND	2	2A	GND
GND	3	3A	GND
GND	4	4A	GND
TA10	5	5A	TA10
TA9	6	6A	TA9
TA8	7	7A	TA8
TA7	8	8A	TA7
TA6	9	9A	TA6
TA5	10	10A	TA5
TA4	11	11A	TA4
TA3	12	12A	TA3
TA2	13	13A	TA2
TA1	14	14A	TA1
TA0	15	15A	TA0
BUSY	16	16A	BUSY
GD31	17	17A	GD31
GD30	18	18A	GD30
GD29	19	19A	GD29
GD28	20	20A	GD28
GD27	21	21A	GD27
GD26	22	22A	GD26
GD25	23	23A	GD25
GD24	24	24A	GD24
RESET	25	25A	RESET
BRD	26	26A	BRD
BWR	27	27A	BWR
SIO CS2	28	28A	SIO CS2
SIO CS3	29	29A	SIO CS3
NC	30	30A	NC
NC	31	31A	NC
NC	32	32A	NC
+5V	33	33A	+5V
+5V	34	34A	+5V
+5V	35	35A	+5V
+5V	36	36A	+5V
GND	37	37A	GND
GND	38	38A	GND
GND	39	39A	GND
GND	40	40A	GND

CPU-191 Signal	CN13	CN2	IF-523 Signal
GND	1	1A	GND
GND	2	2A	GND
GND	3	3A	GND
GND	4	4A	GND
RX4 (+)	5	5A	RX4 (+)
RX4 (-)	6	6A	RX4 (-)
TX4 (+)	7	7A	TX4 (+)
TX4 (-)	8	8A	TX4 (-)
RX5 (+)	9	9A	RX5 (+)
RX5 (-)	10	10A	RX5 (-)
TX5 (+)	11	11A	TX5 (+)
TX5 (-)	12	12A	TX5 (-)
RX6 (+)	13	13A	RX6 (+)
RX6 (-)	14	14A	RX6 (-)
TX6 (+)	15	15A	TX6 (+)
TX6 (-)	16	16A	TX6 (-)
RX7 (+)	17	17A	RX7 (+)
RX7 (-)	18	18A	RX7 (-)
TX7 (+)	19	19A	TX7 (+)
TX7 (-)	20	20A	TX7 (-)
CM20	21	21A	CM20
CM21	22	22A	CM21
CM30	23	23A	CM30
CM31	24	24A	CM31
ST2	25	25A	ST2
ST3	26	26A	ST3
SIO CONT2	27	27A	SIO CONT2
SIO CONT3	28	28A	SIO CONT3
SIO STS2	29	29A	SIO STS2
SIO STS3	30	30A	SIO STS3
NC	31	31A	NC
NC	32	32A	NC
+5V	33	33A	+5V
+5V	34	34A	+5V
+5V	35	35A	+5V
+5V	36	36A	+5V
GND	37	37A	GND
GND	38	38A	GND
GND	39	39A	GND
GND	40	40A	GND

FLOPPY DISK DRIVE UNIT

CN8 — WIRE, FLAT TYPE (26 CORE)

CPU-191 Signal	CN8	Drive pin	Drive Signal
SIDE1	1	1	SIDE1
GND	2	2	GND
READ DAT	3	3	READ DAT
GND	4	4	GND
WRITE PROT	5	5	WRITE PROT
GND	6	6	GND
TRK00	7	7	TRK00
GND	8	8	GND
WG	9	9	WG
GND	10	10	GND
WD	11	11	WD
GND	12	12	GND
STEP	13	13	STEP
NC	14	14	NC
DIRECTION	15	15	DIRECTION
NC	16	16	NC
MOTOR ON	17	17	MOTOR ON
MDDIA	18	18	MDDIA
READY	19	19	READY
NC	20	20	NC
DISK CHANGE	21	21	DISK CHANGE
+5V	22	22	+5V
DRIVE SELECT	23	23	DRIVE SELECT
+5V	24	24	+5V
INDEX	25	25	INDEX
+5V	26	26	+5V

TO CN-1148
TO CN-1143
TO CN-1143
TO KY-321 (M/E2) FOR BKDS-7011R/LR
KY-367 (M/E2) FOR BKDS-7012R/LR
TO KY-320 (M/E3)

FRAME WIRING (2/9)

BKDS-701xR/701xLR

 BKDS-701xR/701xLR FRAME (3/9)

TO CPU-191

HARNESS RPNL

FLAT CABLE 60P

CN2

CPU-191, 9-1	1	1	GND
CPU-191, 9-2	2	2	GND
CPU-191, 9-3	3	3	GND
CPU-191, 9-4	4	4	TX6 (-)
CPU-191, 9-5	5	5	RX6 (+)
CPU-191, 9-6	6	6	GND
CPU-191, 9-7	7	7	GND
CPU-191, 9-8	8	8	GND
CPU-191, 9-9	9	9	TX7 (-)
CPU-191, 9-10	10	10	RX7 (+)
CPU-191, 9-11	11	11	GND
CPU-191, 9-12	12	12	GND
CPU-191, 9-13	13	13	GND
CPU-191, 9-14	14	14	GND
CPU-191, 9-15	15	15	GND
CPU-191, 9-16	16	16	GND
CPU-191, 9-17	17	17	NC
CPU-191, 9-18	18	18	A-TWDT
CPU-191, 9-19	19	19	E-WDT
CPU-191, 9-20	20	20	GND
CPU-191, 9-21	21	21	GND
CPU-191, 9-22	22	22	GND
CPU-191, 9-23	23	23	GND
CPU-191, 9-24	24	24	GND
CPU-191, 9-25	25	25	GND
CPU-191, 9-26	26	26	GND
CPU-191, 9-27	27	27	GND
CPU-191, 9-28	28	28	GND
CPU-191, 9-29	29	29	GND
CPU-191, 9-30	30	30	GND
CPU-191, 9-31	31	31	TXD0
CPU-191, 9-32	32	32	RXD0
CPU-191, 9-33	33	33	TX6 (+)
CPU-191, 9-34	34	34	GND
CPU-191, 9-35	35	35	RX6 (-)
CPU-191, 9-36	36	36	TXD1
CPU-191, 9-37	37	37	RXD1
CPU-191, 9-38	38	38	TX7 (+)
CPU-191, 9-39	39	39	GND
CPU-191, 9-40	40	40	RX7 (-)
CPU-191, 9-41	41	41	ELCK
CPU-191, 9-42	42	42	EL DATA 0
CPU-191, 9-43	43	43	EL DATA 1
CPU-191, 9-44	44	44	ELVD
CPU-191, 9-45	45	45	ELHD
CPU-191, 9-46	46	46	NC
CPU-191, 9-47	47	47	GND
CPU-191, 9-48	48	48	GND
CPU-191, 9-49	49	49	E-RDT
CPU-191, 9-50	50	50	TCLK
CPU-191, 9-51	51	51	NC
CPU-191, 9-52	52	52	TQCLK
CPU-191, 9-53	53	53	TBLANK
CPU-191, 9-54	54	54	TSEQ
CPU-191, 9-55	55	55	SCLK
CPU-191, 9-56	56	56	SEQ
CPU-191, 9-57	57	57	A-WDT
CPU-191, 9-58	58	58	BLANK
CPU-191, 9-59	59	59	A-RDT
CPU-191, 9-60	60	60	IWLD

TO CPU-191

HARNESS RPNL

FLAT CABLE 60P

CN1

CPU-191, 10-1	1	1	GPI OUT 1A
CPU-191, 10-2	2	2	GPI OUT 2A
CPU-191, 10-3	3	3	GPI OUT 3A
CPU-191, 10-4	4	4	GPI OUT 4A
CPU-191, 10-5	5	5	GPI OUT 5
CPU-191, 10-6	6	6	GPI OUT 7
CPU-191, 10-7	7	7	GPI IN 1
CPU-191, 10-8	8	8	GPI IN 3
CPU-191, 10-9	9	9	GPI IN 5
CPU-191, 10-10	10	10	GPI IN 7
CPU-191, 10-11	11	11	GND
CPU-191, 10-12	12	12	TX0 (+)
CPU-191, 10-13	13	13	RX0 (+)
CPU-191, 10-14	14	14	GND
CPU-191, 10-15	15	15	FLD (-)
CPU-191, 10-16	16	16	TX3 (+)
CPU-191, 10-17	17	17	GND
CPU-191, 10-18	18	18	RX3 (-)
CPU-191, 10-19	19	19	TX1 (+)
CPU-191, 10-20	20	20	GND
CPU-191, 10-21	21	21	RX1 (-)
CPU-191, 10-22	22	22	TX4 (+)
CPU-191, 10-23	23	23	GND
CPU-191, 10-24	24	24	RX4 (-)
CPU-191, 10-25	25	25	TX2 (+)
CPU-191, 10-26	26	26	GND
CPU-191, 10-27	27	27	RX2 (-)
CPU-191, 10-28	28	28	TX5 (+)
CPU-191, 10-29	29	29	GND
CPU-191, 10-30	30	30	RX5 (-)
CPU-191, 10-31	31	31	GPI OUT 1B
CPU-191, 10-32	32	32	GPI OUT 2B
CPU-191, 10-33	33	33	GPI OUT 3B
CPU-191, 10-34	34	34	GPI OUT 4B
CPU-191, 10-35	35	35	GPI OUT 6
CPU-191, 10-36	36	36	GPI OUT 8
CPU-191, 10-37	37	37	GPI IN 2
CPU-191, 10-38	38	38	GPI IN 4
CPU-191, 10-39	39	39	GPI IN 6
CPU-191, 10-40	40	40	GPI IN 8
CPU-191, 10-41	41	41	TX0 (+)
CPU-191, 10-42	42	42	GND
CPU-191, 10-43	43	43	RX0 (-)
CPU-191, 10-44	44	44	FLD (+)
CPU-191, 10-45	45	45	GND
CPU-191, 10-46	46	46	TX3 (-)
CPU-191, 10-47	47	47	RX3 (+)
CPU-191, 10-48	48	48	GND
CPU-191, 10-49	49	49	TX1 (-)
CPU-191, 10-50	50	50	RX1 (+)
CPU-191, 10-51	51	51	GND
CPU-191, 10-52	52	52	TX4 (-)
CPU-191, 10-53	53	53	RX4 (+)
CPU-191, 10-54	54	54	GND
CPU-191, 10-55	55	55	TX2 (-)
CPU-191, 10-56	56	56	RX2 (+)
CPU-191, 10-57	57	57	GND
CPU-191, 10-58	58	58	TX5 (-)
CPU-191, 10-59	59	59	RX5 (+)
CPU-191, 10-60	60	60	GND

TO CN-1148

TO CPU-191

HARNESS DC30

CN10

0	CN-1148, 12-1	1	1	+12V
1	CN-1148, 12-2	2	2	+12V
2	CN-1148, 12-3	3	3	+12V
3	CN-1148, 12-4	4	4	+5V
4	CN-1148, 12-5	5	5	GND
0	CN-1148, 12-6	6	6	GND
6	CN-1148, 12-7	7	7	GND
7	CN-1148, 12-8	8	8	GND

HARNESS CTRL 7

CN18 OPTION IN

1	CPU-191, 7-1	1	1	SCLK
2	CPU-191, 7-2	2	2	BLANK
3	CPU-191, 7-3	3	3	SEQ
4	CPU-191, 7-4	4	4	IWLD
0	CPU-191, 7-5	5	5	WDT
6	CPU-191, 7-6	6	6	RDT
7	CPU-191, 7-7	7	7	TCLK
8	CPU-191, 7-8	8	8	TBLANK
9	CPU-191, 7-9	9	9	TSEQ
0	CPU-191, 7-10	10	10	TQCLK
1	CPU-191, 7-11	11	11	TWDT
2	CPU-191, 7-12	12	12	GND

CN16 — DISPLAY PANEL D-SUB 25PIN FEMALE

GND	1
+12V	2
SCLK	3
GND	4
WDT	5
IWLD	6
GND	7
ELCK	8
EL DATA 0	9
GND	10
ELVD	11
GND	12
GND	13
+12V	14
+12V	15
BLANK	16
GND	17
SEQ	18
RDT	19
GND	20
ELHD	21
EL DATA 1	22
+12V	23
+12V	24
GND	25

CN3 — GPI D-SUB 25PIN FEMALE

GND	1
GND	2
GPI IN 2	3
GPI IN 4	4
GPI IN 6	5
GPI IN 8	6
GPI OUT 1B	7
GPI OUT 2B	8
GPI OUT 3B	9
GPI OUT 4B	10
GPI OUT 6	11
GPI OUT 8	12
GND	13
GND	14
GPI IN 1	15
GPI IN 3	16
GPI IN 5	17
GPI IN 7	18
GPI OUT 1A	19
GPI OUT 2A	20
GPI OUT 3A	21
GPI OUT 4A	22
GPI OUT 5	23
GPI OUT 7	24
GND	25

CN9 — AUX PANEL D-SUB 25PIN FEMALE

GND	1
+12V	2
SCLK	3
GND	4
WDT	5
IWLD	6
GND	7
TCLK	8
TWDT	9
GND	10
TBLANK	11
GND	12
GND	13
+12V	14
+12V	15
BLANK	16
GND	17
SEQ	18
RDT	19
GND	20
TSEQ	21
TQCLK	22
+12V	23
+12V	24
GND	25

CN17 — OPTION PANEL D-SUB 25PIN FEMALE

GND	1
+12V	2
SCLK	3
GND	4
WDT	5
IWLD	6
GND	7
TCLK	8
TWDT	9
GND	10
TBLANK	11
GND	12
GND	13
+12V	14
+12V	15
BLANK	16
GND	17
SEQ	18
RDT	19
GND	20
TSEQ	21
TQCLK	22
+12V	23
+12V	24
GND	25

CN4 — SWITCHER D-SUB 9PIN FEMALE

GND	1
RX 0 (-)	2
TX 0 (+)	3
GND	4
FLD (+)	5
GND	6
RX 0 (+)	7
TX 0 (-)	8
FLD (-)	9

CN12 — REMOTE 2 D-SUB 9PIN FEMALE

GND	1
RX 4 (-)	2
TX 4 (+)	3
GND	4
NC	5
GND	6
RX 4 (+)	7
TX 4 (-)	8
NC	9

CN5 — DSK D-SUB 9PIN FEMALE

GND	1
RX 1 (-)	2
TX 1 (+)	3
GND	4
NC	5
GND	6
RX 1 (+)	7
TX 1 (-)	8
NC	9

CN13 — REMOTE 3 D-SUB 9PIN FEMALE

GND	1
RX 5 (-)	2
TX 5 (+)	3
GND	4
NC	5
GND	6
RX 5 (+)	7
TX 5 (-)	8
NC	9

CN6 — DME D-SUB 9PIN FEMALE

GND	1
RX 2 (-)	2
TX 2 (+)	3
GND	4
NC	5
GND	6
RX 2 (+)	7
TX 2 (-)	8
NC	9

CN14 — REMOTE 4 D-SUB 9PIN FEMALE

GND	1
RX 6 (-)	2
TX 6 (+)	3
GND	4
NC	5
GND	6
RX 6 (+)	7
TX 6 (-)	8
NC	9

CN11 — REMOTE 1 D-SUB 9PIN FEMALE

GND	1
RX 3 (-)	2
TX 3 (+)	3
GND	4
NC	5
GND	6
RX 3 (+)	7
TX 3 (-)	8
NC	9

CN15 — REMOTE 5 D-SUB 9PIN FEMALE

GND	1
RX 7 (-)	2
TX 7 (+)	3
GND	4
NC	5
GND	6
RX 7 (+)	7
TX 7 (-)	8
NC	9

CN7 — TERMINAL 1 D-SUB 9PIN FEMALE

DCD0	1
RXD0	2
TXD0	3
DTR0	4
GND	5
DSR0	6
RTS0	7
CTS0	8
RI0	9

CN8 — TERMINAL 2 D-SUB 9PIN FEMALE

DCD1	1
RXD1	2
TXD1	3
DTR1	4
GND	5
DSR1	6
RTS1	7
CTS1	8
RI1	9

CN-1143

FRAME WIRING (3/9)

BKDS-701xR/701xLR

BKDS-701xR/701xLR FRAME (4/9)

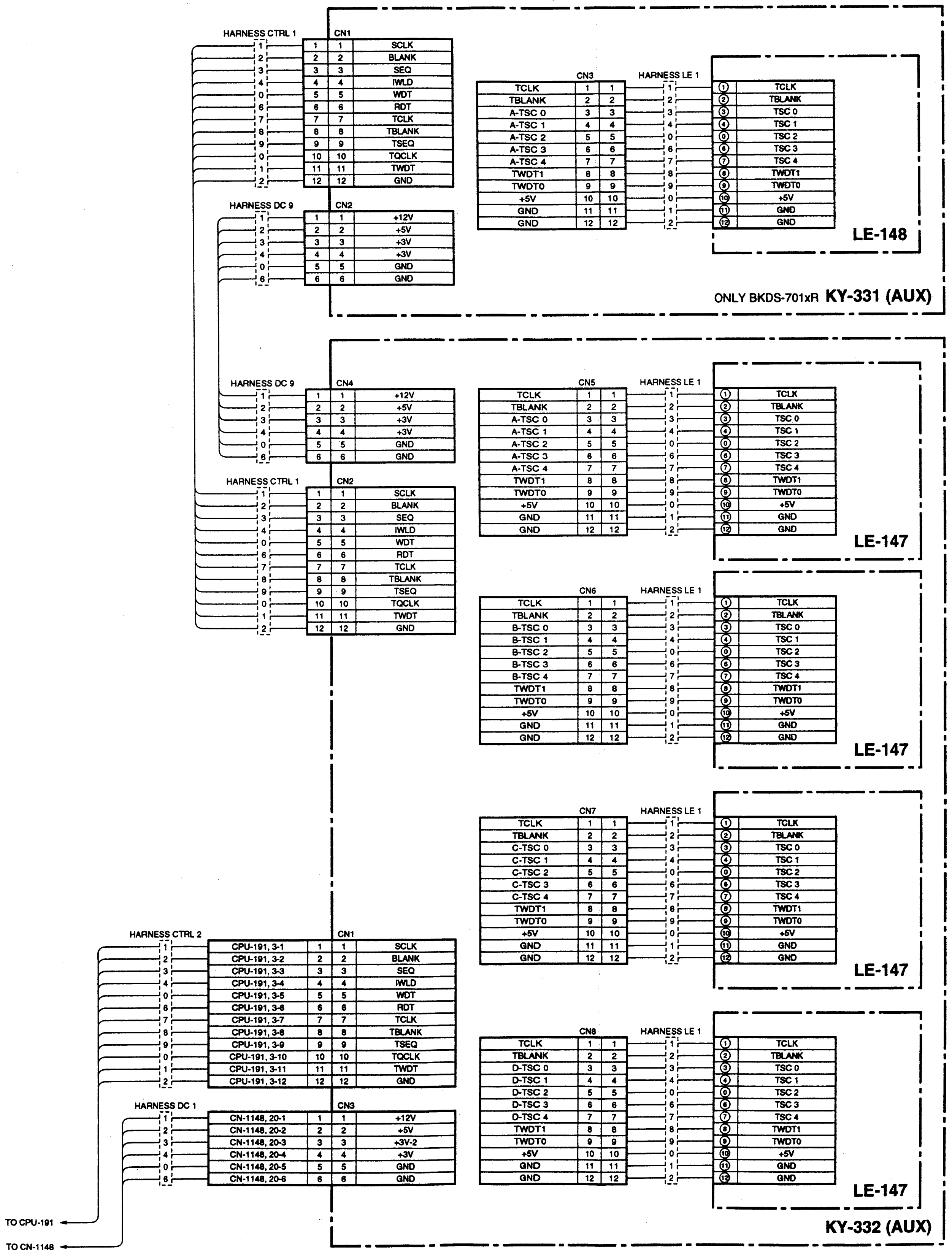

FRAME WIRING (4/9)

BKDS-701xR/701xLR

2-43

BKDS-701xR/701xLR FRAME (5/9)

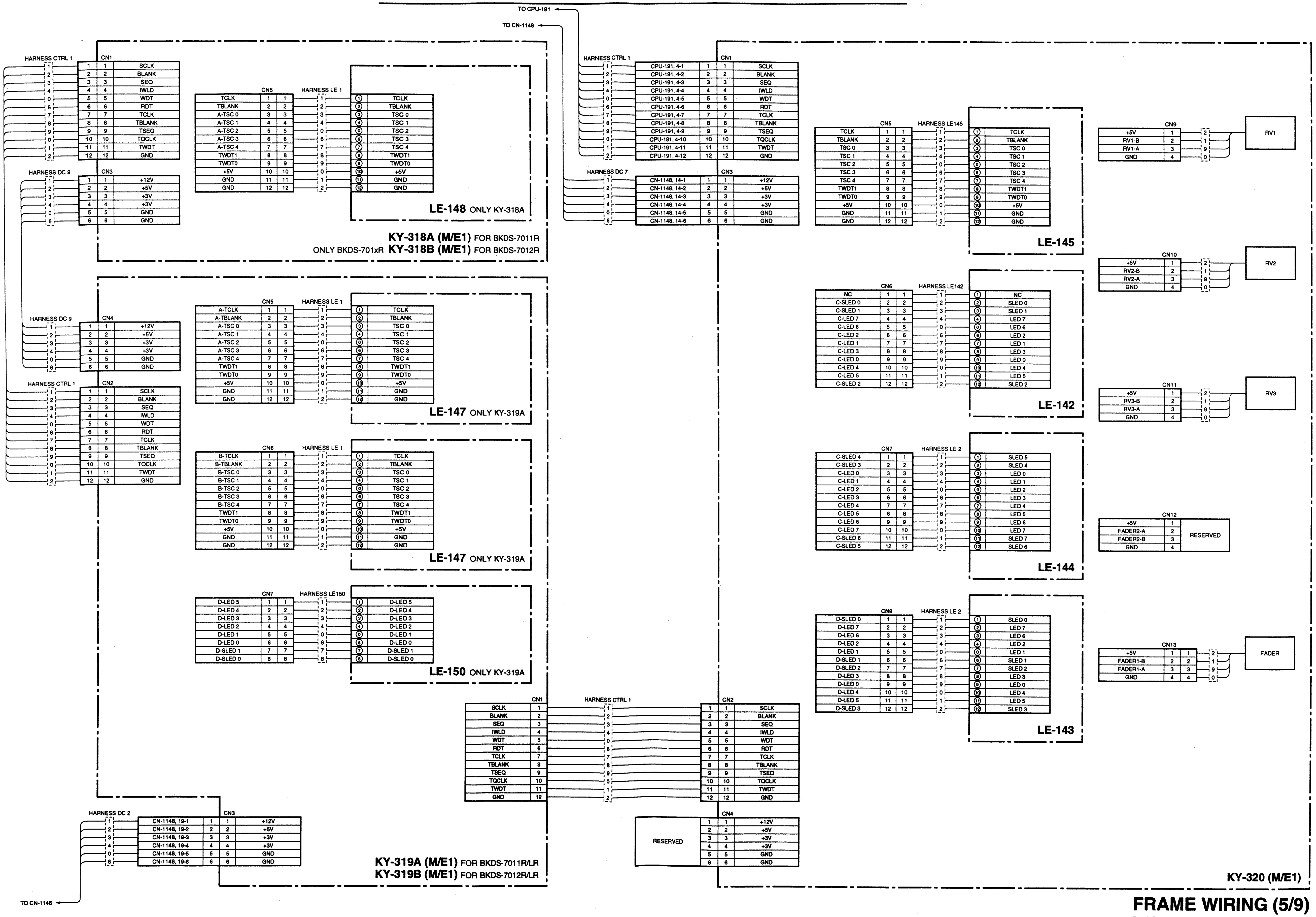

BKDS-701xR/701xLR FRAME (6/9)

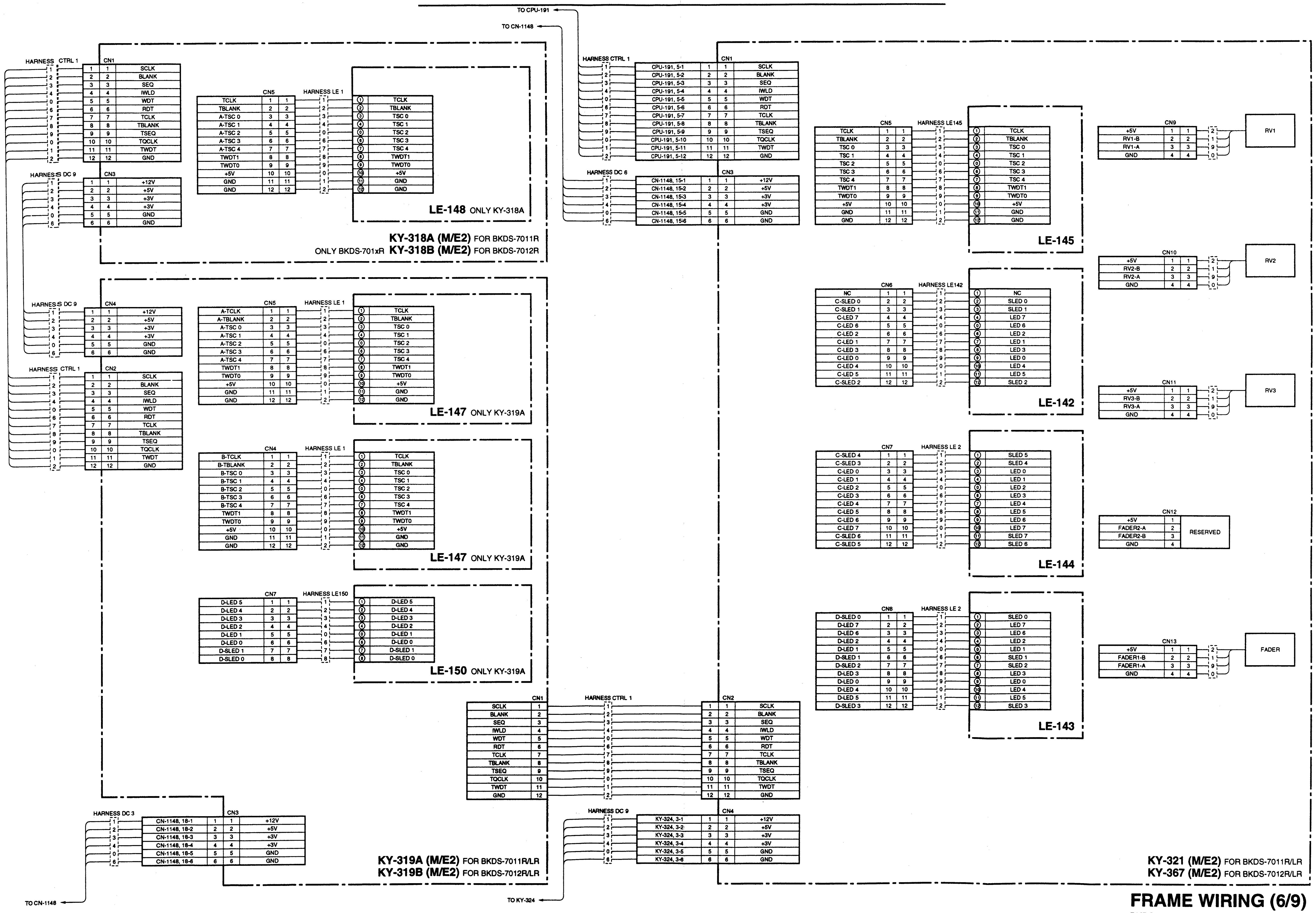

FRAME WIRING (6/9)

BKDS-701xR/701xLR

 BKDS-701xR/701xLR FRAME (7/9)

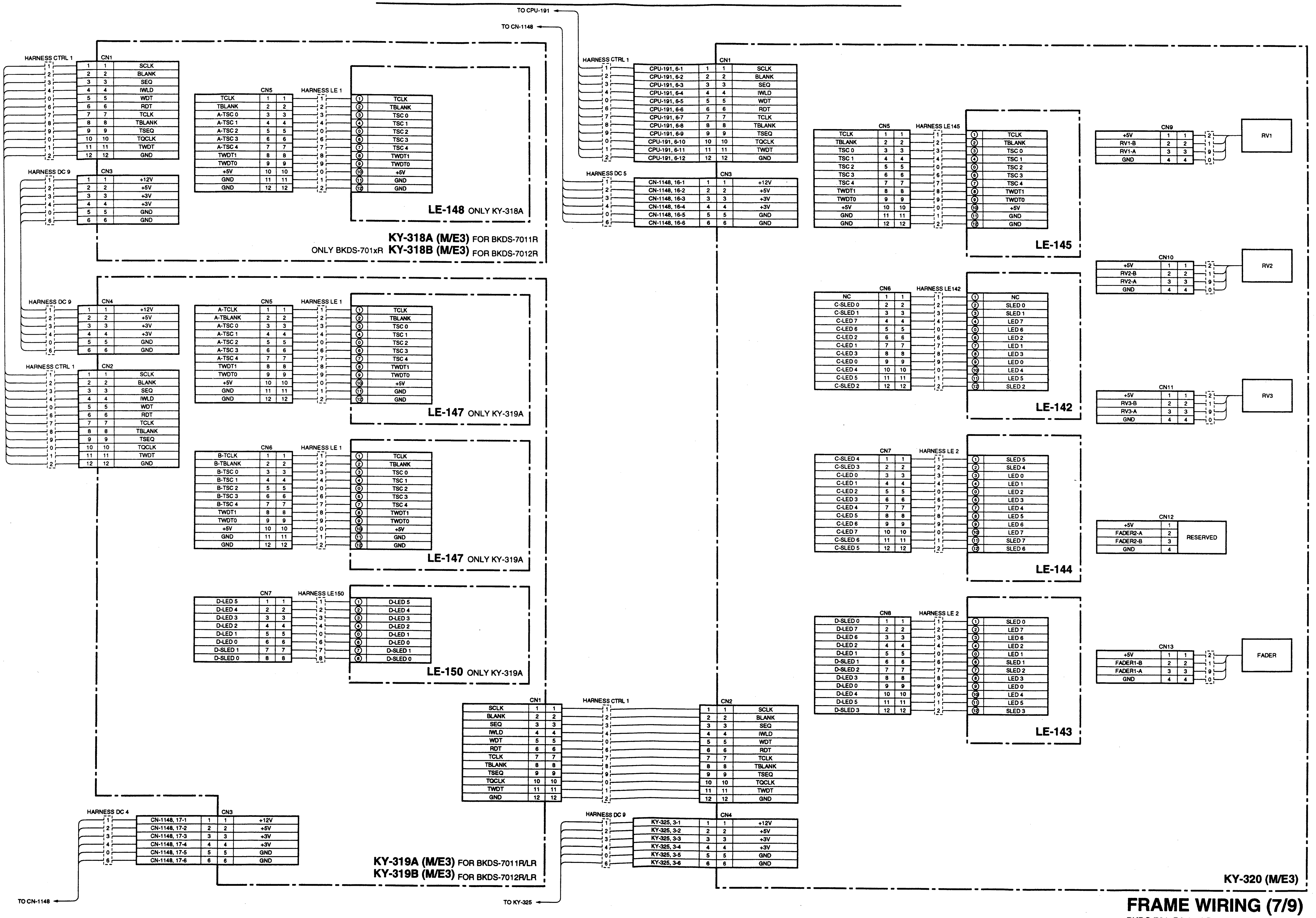

 2-46

 BKDS-701xR/701xLR FRAME (8/9)

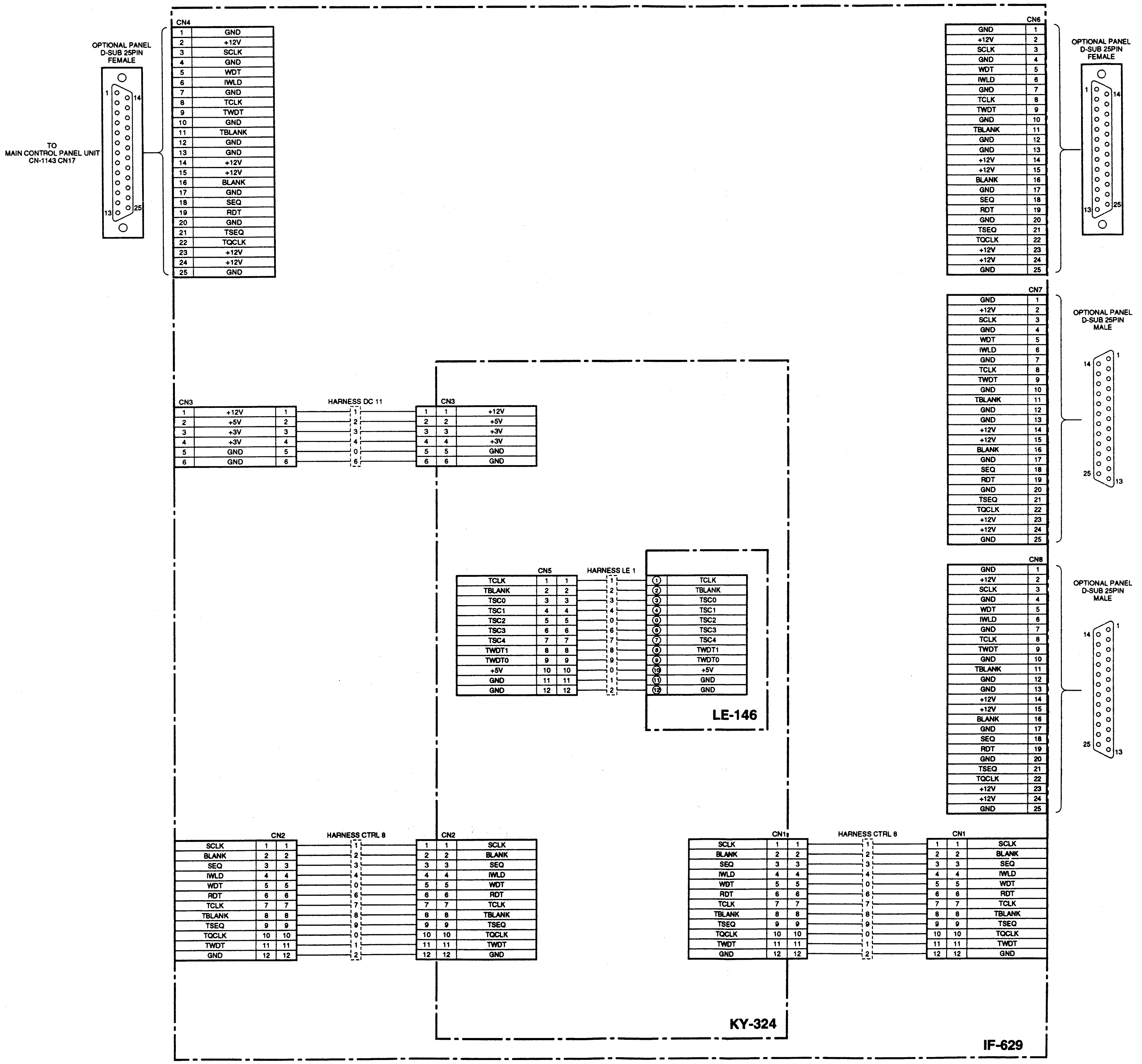

FRAME WIRING (8/9)

BKDS-701xR/701xLR

 2-47

 BKDS-701xR/701xLR FRAME (9/9)

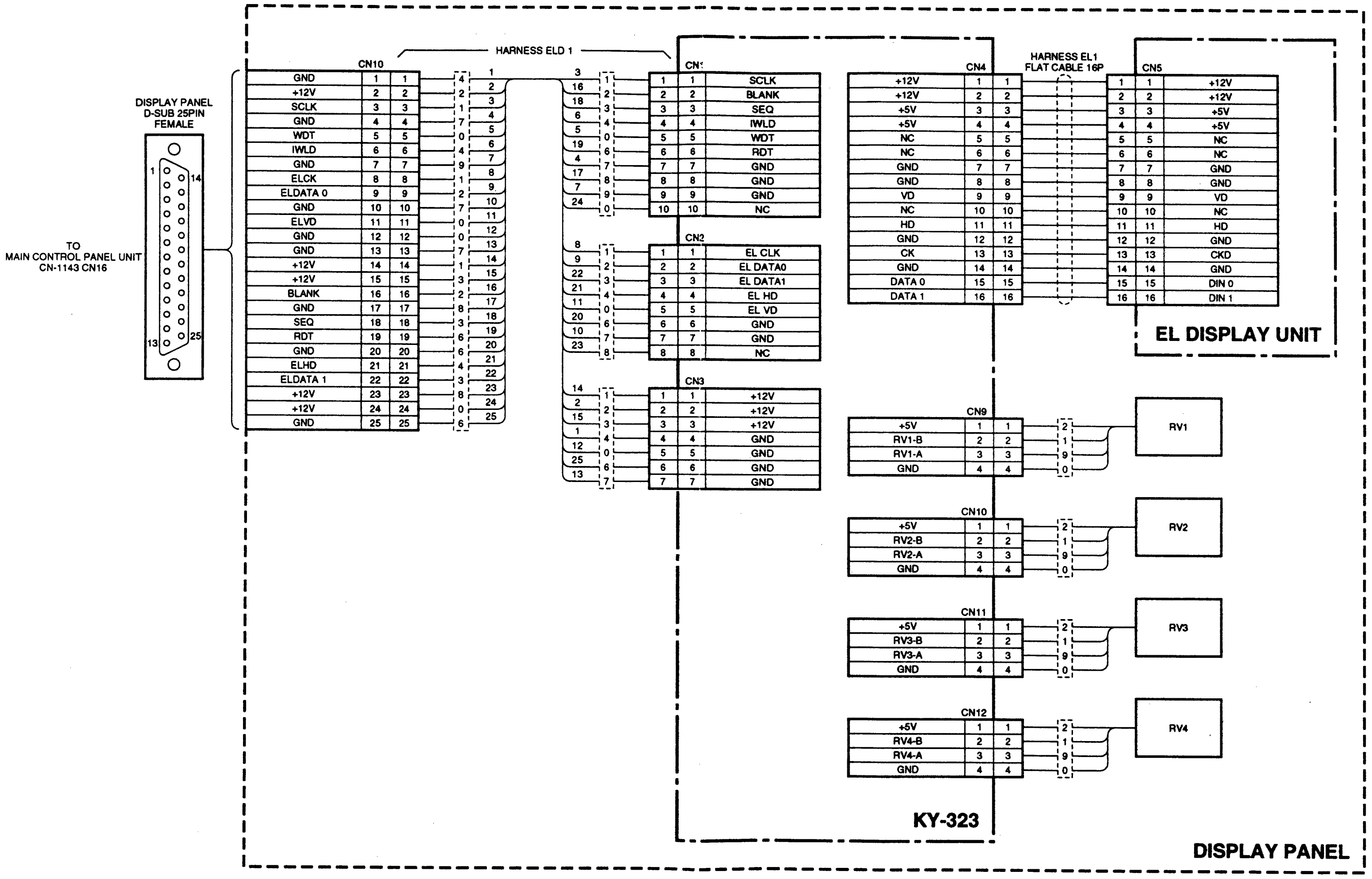

FRAME WIRING (9/9)

BKDS-701xR/701xLR

 BKDS-702xR/702xLR OVERALL (1/3)

2-7. BKDS-702xR/702xLR
BKDS-702xR/702xLR OVERALL BLOCK

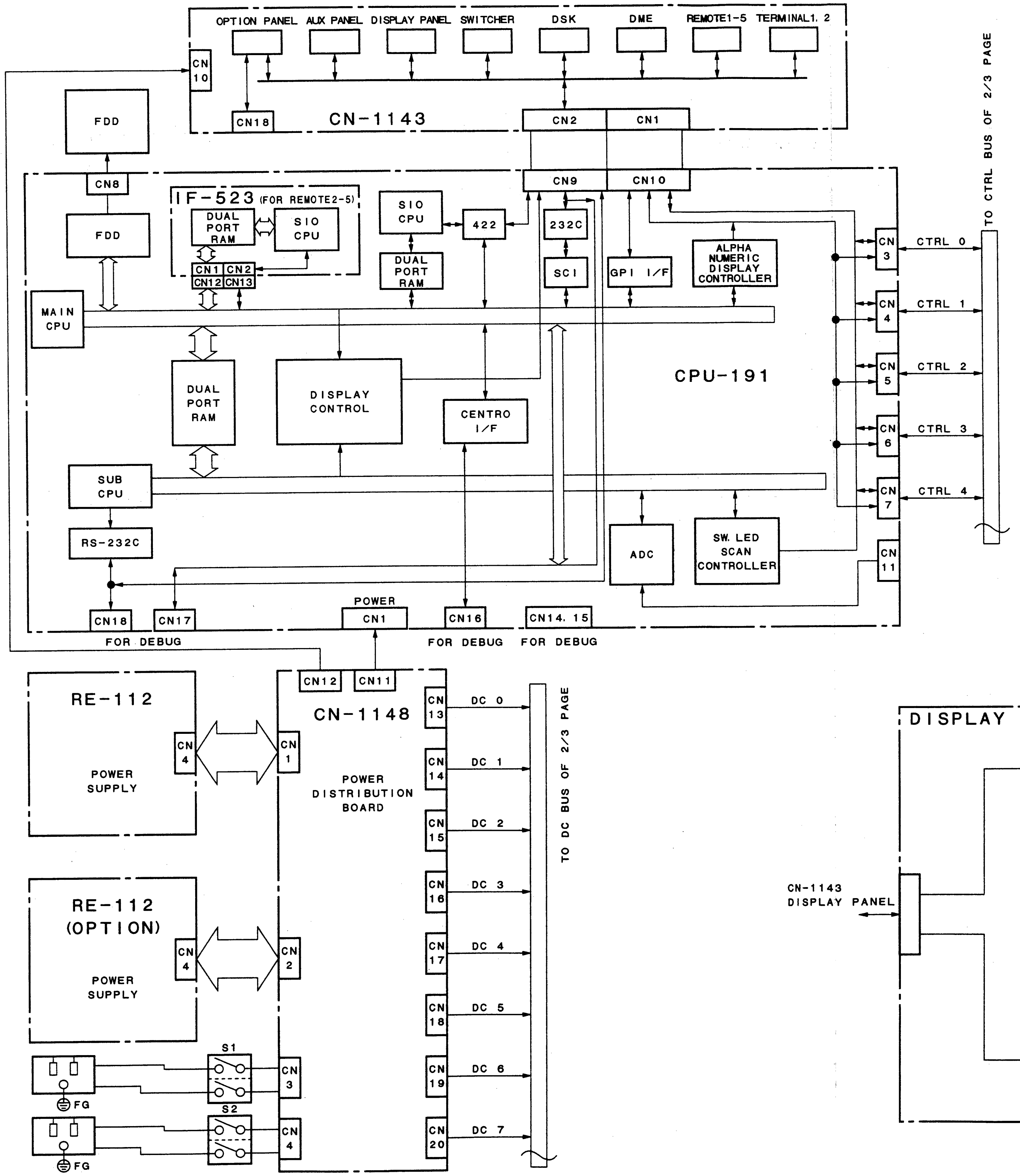

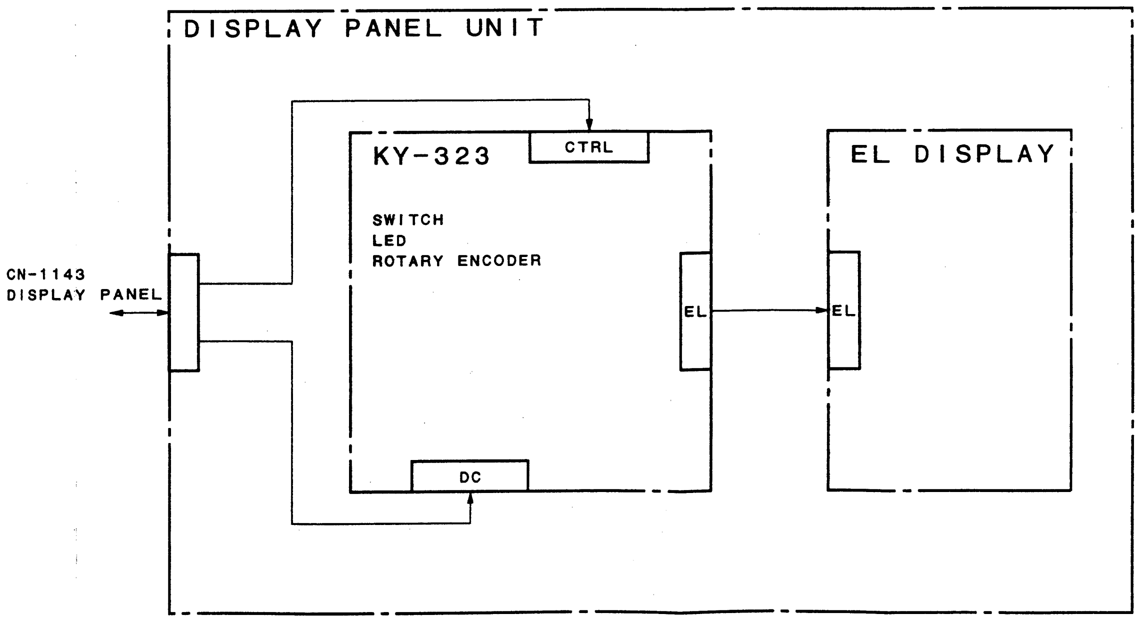

 2-49

 BKDS-702xR/702xLR OVERALL (2/3)

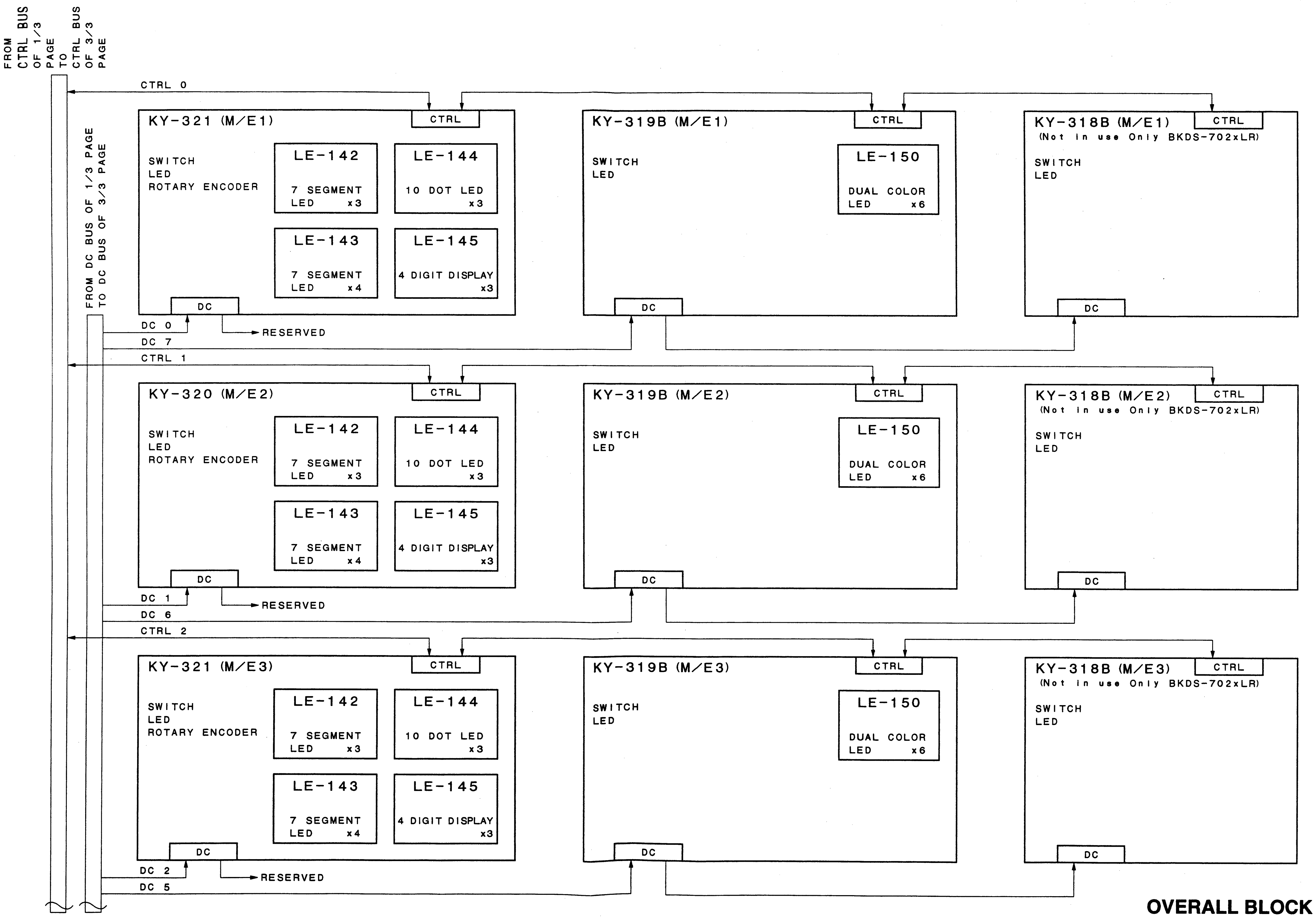

OVERALL BLOCK (2/3)

BKDS-702xR/702xLR

 BKDS-702xR/702xLR OVERALL (3/3)

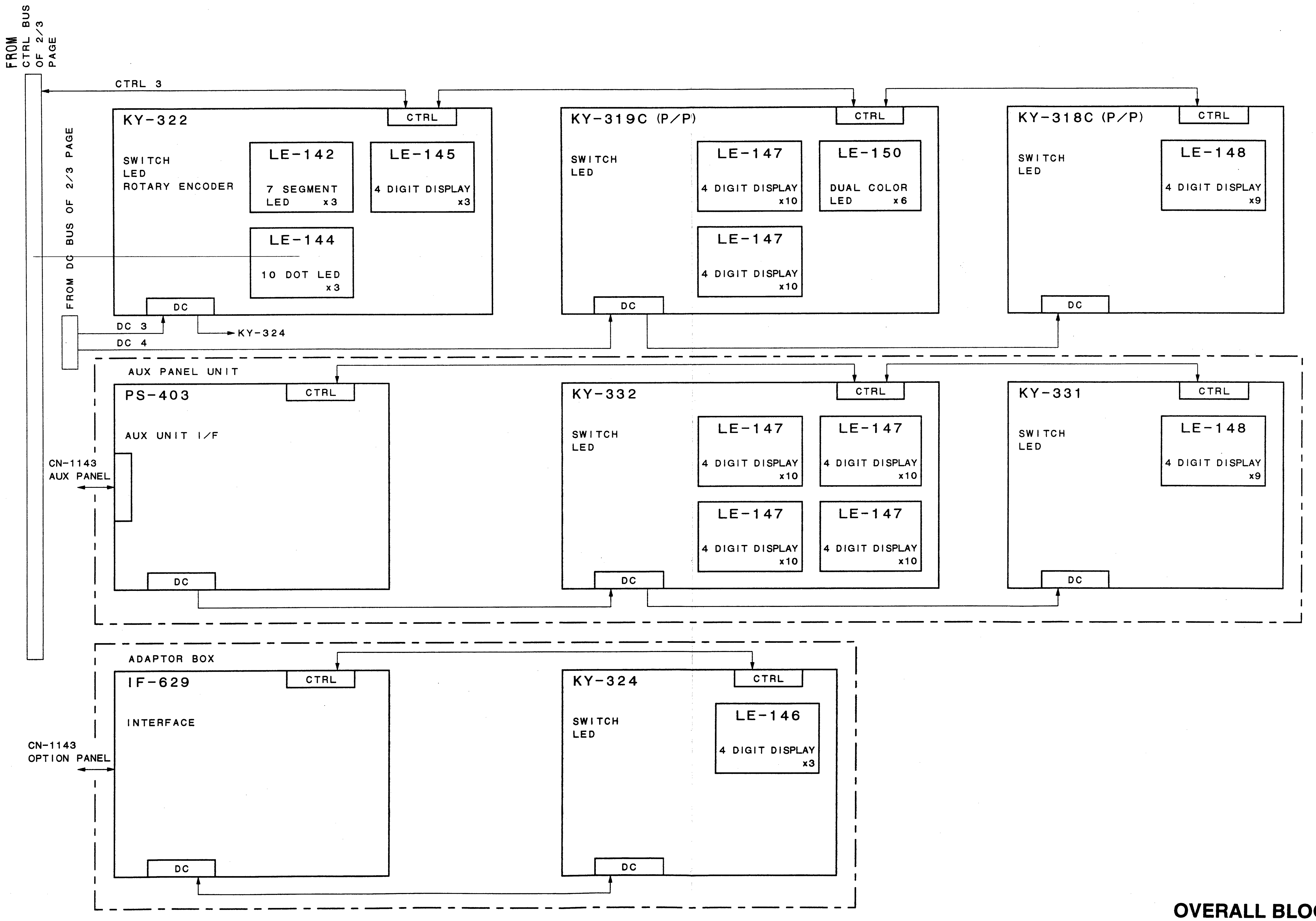

OVERALL BLOCK (3/3)

BKDS-702xR/702xLR

BKDS-702xR/702xLR FRAME WIRING

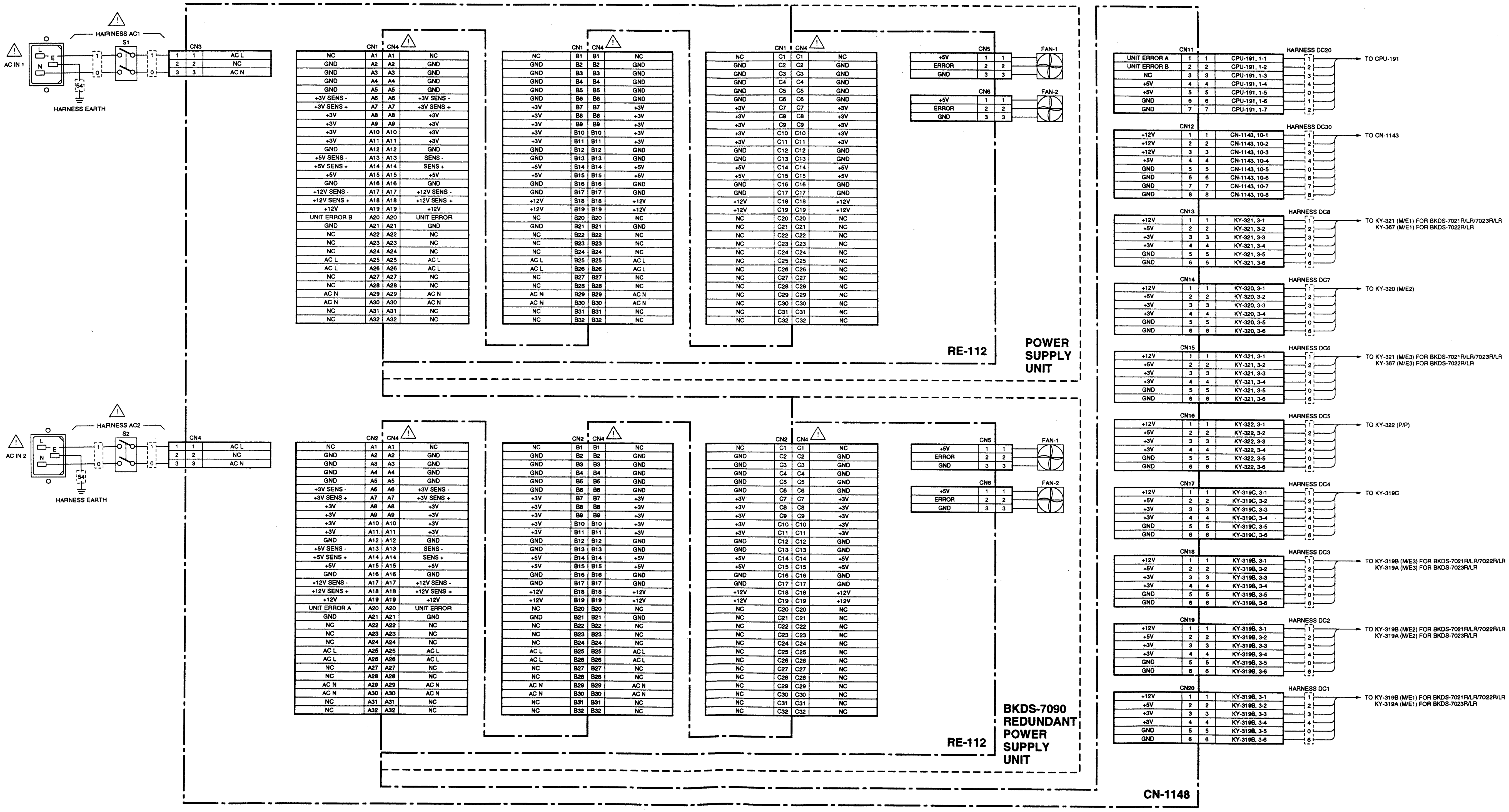

FRAME WIRING (1/10)

BKDS-702xR/702xLR
BKDS-7090

BKDS-702xR/702xLR FRAME (2/10)

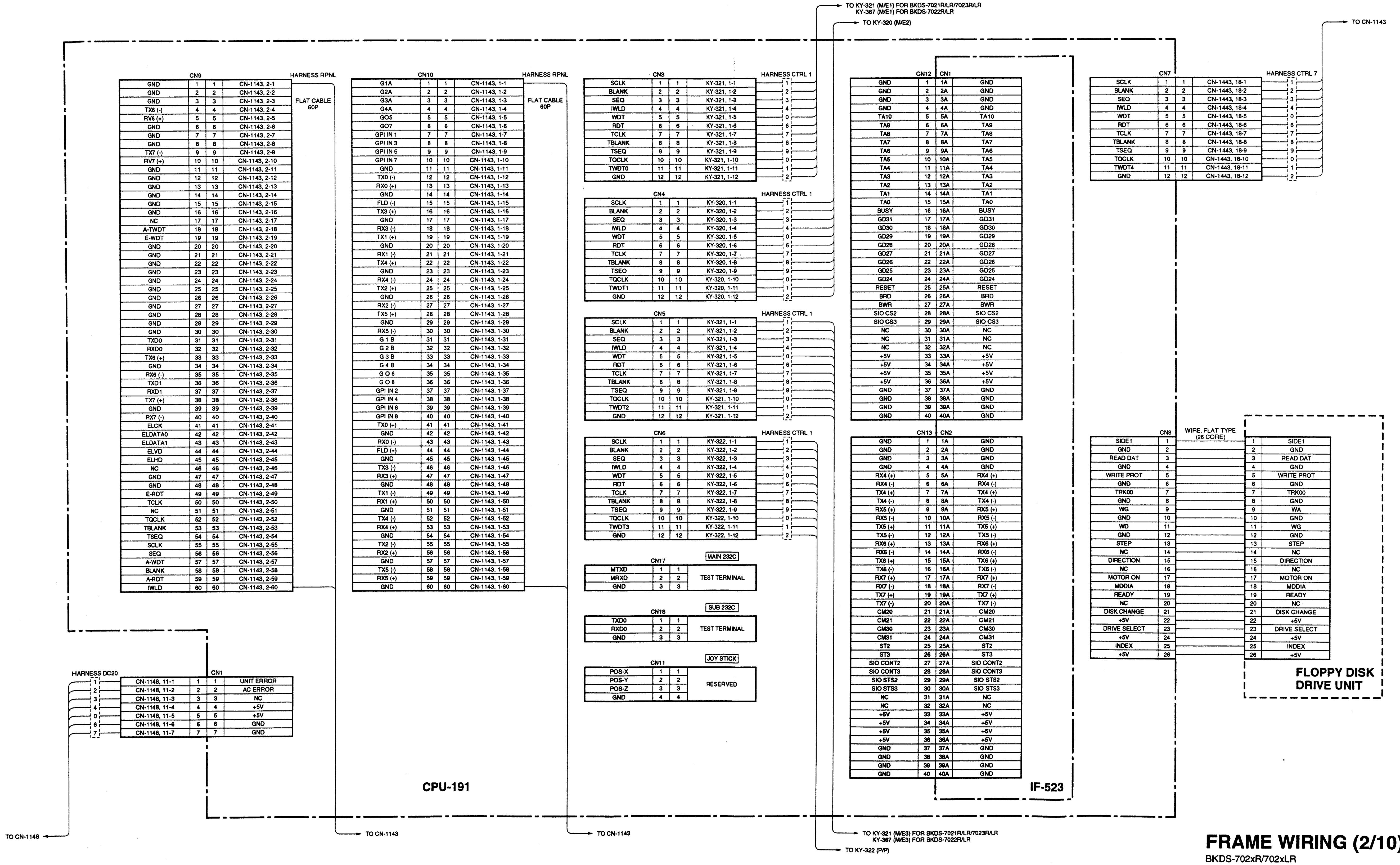

FRAME WIRING (2/10)

BKDS-702xR/702xLR

 BKDS-702xR/702xLR FRAME (3/10)

TO CPU-191

HARNESS RPNL — FLAT CABLE 60P

CN2

CPU-191, 9-1	1	1	GND
CPU-191, 9-2	2	2	GND
CPU-191, 9-3	3	3	GND
CPU-191, 9-4	4	4	TX6 (-)
CPU-191, 9-5	5	5	RX6 (+)
CPU-191, 9-6	6	6	GND
CPU-191, 9-7	7	7	GND
CPU-191, 9-8	8	8	GND
CPU-191, 9-9	9	9	TX7 (-)
CPU-191, 9-10	10	10	RX7 (+)
CPU-191, 9-11	11	11	GND
CPU-191, 9-12	12	12	GND
CPU-191, 9-13	13	13	GND
CPU-191, 9-14	14	14	GND
CPU-191, 9-15	15	15	GND
CPU-191, 9-16	16	16	GND
CPU-191, 9-17	17	17	NC
CPU-191, 9-18	18	18	A-TWDT
CPU-191, 9-19	19	19	E-WDT
CPU-191, 9-20	20	20	GND
CPU-191, 9-21	21	21	GND
CPU-191, 9-22	22	22	GND
CPU-191, 9-23	23	23	GND
CPU-191, 9-24	24	24	GND
CPU-191, 9-25	25	25	GND
CPU-191, 9-26	26	26	GND
CPU-191, 9-27	27	27	GND
CPU-191, 9-28	28	28	GND
CPU-191, 9-29	29	29	GND
CPU-191, 9-30	30	30	GND
CPU-191, 9-31	31	31	TXD0
CPU-191, 9-32	32	32	RXD0
CPU-191, 9-33	33	33	TX6 (+)
CPU-191, 9-34	34	34	GND
CPU-191, 9-35	35	35	RX6 (-)
CPU-191, 9-36	36	36	TXD1
CPU-191, 9-37	37	37	RXD1
CPU-191, 9-38	38	38	TX7 (+)
CPU-191, 9-39	39	39	GND
CPU-191, 9-40	40	40	RX7 (-)
CPU-191, 9-41	41	41	ELCK
CPU-191, 9-42	42	42	EL DATA 0
CPU-191, 9-43	43	43	EL DATA 1
CPU-191, 9-44	44	44	ELVD
CPU-191, 9-45	45	45	ELHD
CPU-191, 9-46	46	46	NC
CPU-191, 9-47	47	47	GND
CPU-191, 9-48	48	48	GND
CPU-191, 9-49	49	49	E-RDT
CPU-191, 9-50	50	50	TCLK
CPU-191, 9-51	51	51	NC
CPU-191, 9-52	52	52	TQCLK
CPU-191, 9-53	53	53	TBLANK
CPU-191, 9-54	54	54	TSEQ
CPU-191, 9-55	55	55	SCLK
CPU-191, 9-56	56	56	SEQ
CPU-191, 9-57	57	57	A-WDT
CPU-191, 9-58	58	58	BLANK
CPU-191, 9-59	59	59	A-RDT
CPU-191, 9-60	60	60	IWLD

TO CPU-191

HARNESS RPNL — FLAT CABLE 60P

CN1

CPU-191, 10-1	1	1	GPI OUT 1A
CPU-191, 10-2	2	2	GPI OUT 2A
CPU-191, 10-3	3	3	GPI OUT 3A
CPU-191, 10-4	4	4	GPI OUT 4A
CPU-191, 10-5	5	5	GPI OUT 5
CPU-191, 10-6	6	6	GPI OUT 7
CPU-191, 10-7	7	7	GPI IN 1
CPU-191, 10-8	8	8	GPI IN 3
CPU-191, 10-9	9	9	GPI IN 5
CPU-191, 10-10	10	10	GPI IN 7
CPU-191, 10-11	11	11	GND
CPU-191, 10-12	12	12	TX0 (+)
CPU-191, 10-13	13	13	RX0 (+)
CPU-191, 10-14	14	14	GND
CPU-191, 10-15	15	15	FLD (-)
CPU-191, 10-16	16	16	TX3 (+)
CPU-191, 10-17	17	17	GND
CPU-191, 10-18	18	18	RX3 (-)
CPU-191, 10-19	19	19	TX1 (+)
CPU-191, 10-20	20	20	GND
CPU-191, 10-21	21	21	RX1 (-)
CPU-191, 10-22	22	22	TX4 (+)
CPU-191, 10-23	23	23	GND
CPU-191, 10-24	24	24	RX4 (-)
CPU-191, 10-25	25	25	TX2 (+)
CPU-191, 10-26	26	26	GND
CPU-191, 10-27	27	27	RX2 (-)
CPU-191, 10-28	28	28	TX5 (+)
CPU-191, 10-29	29	29	GND
CPU-191, 10-30	30	30	RX5 (-)
CPU-191, 10-31	31	31	GPI OUT 1B
CPU-191, 10-32	32	32	GPI OUT 2B
CPU-191, 10-33	33	33	GPI OUT 3B
CPU-191, 10-34	34	34	GPI OUT 4B
CPU-191, 10-35	35	35	GPI OUT 6
CPU-191, 10-36	36	36	GPI OUT 8
CPU-191, 10-37	37	37	GPI IN 2
CPU-191, 10-38	38	38	GPI IN 4
CPU-191, 10-39	39	39	GPI IN 6
CPU-191, 10-40	40	40	GPI IN 8
CPU-191, 10-41	41	41	TX0 (+)
CPU-191, 10-42	42	42	GND
CPU-191, 10-43	43	43	RX0 (-)
CPU-191, 10-44	44	44	FLD (+)
CPU-191, 10-45	45	45	GND
CPU-191, 10-46	46	46	TX3 (-)
CPU-191, 10-47	47	47	RX3 (+)
CPU-191, 10-48	48	48	GND
CPU-191, 10-49	49	49	TX1 (-)
CPU-191, 10-50	50	50	RX1 (+)
CPU-191, 10-51	51	51	GND
CPU-191, 10-52	52	52	TX4 (-)
CPU-191, 10-53	53	53	RX4 (+)
CPU-191, 10-54	54	54	GND
CPU-191, 10-55	55	55	TX2 (-)
CPU-191, 10-56	56	56	RX2 (+)
CPU-191, 10-57	57	57	GND
CPU-191, 10-58	58	58	TX5 (-)
CPU-191, 10-59	59	59	RX5 (+)
CPU-191, 10-60	60	60	GND

TO CN-1148

TO CPU-191

HARNESS DC30

CN10

CN-1148, 12-1	1	1	+12V
CN-1148, 12-2	2	2	+12V
CN-1148, 12-3	3	3	+12V
CN-1148, 12-4	4	4	+5V
CN-1148, 12-5	5	5	GND
CN-1148, 12-6	6	6	GND
CN-1148, 12-7	7	7	GND
CN-1148, 12-8	8	8	GND

HARNESS CTRL 7

CN18 OPTION IN

CPU-191, 7-1	1	1	SCLK
CPU-191, 7-2	2	2	BLANK
CPU-191, 7-3	3	3	SEQ
CPU-191, 7-4	4	4	IWLD
CPU-191, 7-5	5	5	WDT
CPU-191, 7-6	6	6	RDT
CPU-191, 7-7	7	7	TCLK
CPU-191, 7-8	8	8	TBLANK
CPU-191, 7-9	9	9	TSEQ
CPU-191, 7-10	10	10	TQCLK
CPU-191, 7-11	11	11	TWDT
CPU-191, 7-12	12	12	GND

CN16 — DISPLAY PANEL D-SUB 25PIN FEMALE

GND	1
+12V	2
SCLK	3
GND	4
WDT	5
IWLD	6
GND	7
ELCK	8
EL DATA 0	9
GND	10
ELVD	11
GND	12
GND	13
+12V	14
+12V	15
BLANK	16
GND	17
SEQ	18
RDT	19
GND	20
ELHD	21
EL DATA 1	22
+12V	23
+12V	24
GND	25

CN3 — GPI D-SUB 25PIN FEMALE

GND	1
GND	2
GPI IN 2	3
GPI IN 4	4
GPI IN 6	5
GPI IN 8	6
GPI OUT 1B	7
GPI OUT 2B	8
GPI OUT 3B	9
GPI OUT 4B	10
GPI OUT 6	11
GPI OUT 8	12
GND	13
GND	14
GPI IN 1	15
GPI IN 3	16
GPI IN 5	17
GPI IN 7	18
GPI OUT 1A	19
GPI OUT 2A	20
GPI OUT 3A	21
GPI OUT 4A	22
GPI OUT 5	23
GPI OUT 7	24
GND	25

CN9 — AUX PANEL D-SUB 25PIN FEMALE

GND	1
+12V	2
SCLK	3
GND	4
WDT	5
IWLD	6
GND	7
TCLK	8
TWDT	9
GND	10
TBLANK	11
GND	12
GND	13
+12V	14
+12V	15
BLANK	16
GND	17
SEQ	18
RDT	19
GND	20
TSEQ	21
TQCLK	22
+12V	23
+12V	24
GND	25

CN17 — OPTION PANEL D-SUB 25PIN FEMALE

GND	1
+12V	2
SCLK	3
GND	4
WDT	5
IWLD	6
GND	7
TCLK	8
TWDT	9
GND	10
TBLANK	11
GND	12
GND	13
+12V	14
+12V	15
BLANK	16
GND	17
SEQ	18
RDT	19
GND	20
TSEQ	21
TQCLK	22
+12V	23
+12V	24
GND	25

CN4 — SWITCHER D-SUB 9PIN FEMALE

GND	1
RX 0 (-)	2
TX 0 (+)	3
GND	4
FLD (+)	5
GND	6
RX 0 (+)	7
TX 0 (-)	8
FLD (-)	9

CN12 — REMOTE 2 D-SUB 9PIN FEMALE

GND	1
RX 4 (-)	2
TX 4 (+)	3
GND	4
NC	5
GND	6
RX 4 (+)	7
TX 4 (-)	8
NC	9

CN5 — DSK D-SUB 9PIN FEMALE

GND	1
RX 1 (-)	2
TX 1 (+)	3
GND	4
NC	5
GND	6
RX 1 (+)	7
TX 1 (-)	8
NC	9

CN13 — REMOTE 3 D-SUB 9PIN FEMALE

GND	1
RX 5 (-)	2
TX 5 (+)	3
GND	4
NC	5
GND	6
RX 5 (+)	7
TX 5 (-)	8
NC	9

CN6 — DME D-SUB 9PIN FEMALE

GND	1
RX 2 (-)	2
TX 2 (+)	3
GND	4
NC	5
GND	6
RX 2 (+)	7
TX 2 (-)	8
NC	9

CN14 — REMOTE 4 D-SUB 9PIN FEMALE

GND	1
RX 6 (-)	2
TX 6 (+)	3
GND	4
NC	5
GND	6
RX 6 (+)	7
TX 6 (-)	8
NC	9

CN11 — REMOTE 1 D-SUB 9PIN FEMALE

GND	1
RX 3 (-)	2
TX 3 (+)	3
GND	4
NC	5
GND	6
RX 3 (+)	7
TX 3 (-)	8
NC	9

CN15 — REMOTE 5 D-SUB 9PIN FEMALE

GND	1
RX 7 (-)	2
TX 7 (+)	3
GND	4
NC	5
GND	6
RX 7 (+)	7
TX 7 (-)	8
NC	9

CN7 — TERMINAL 1 D-SUB 9PIN FEMALE

DCD0	1
RXD0	2
TXD0	3
DTR0	4
GND	5
DSR0	6
RTS0	7
CTS0	8
RI0	9

CN8 — TERMINAL 2 D-SUB 9PIN FEMALE

DCD1	1
RXD1	2
TXD1	3
DTR1	4
GND	5
DSR1	6
RTS1	7
CTS1	8
RI1	9

CN-1143

FRAME WIRING (3/10)

BKDS-702xR/702xLR

 BKDS-702xR/702xLR FRAME (4/10)

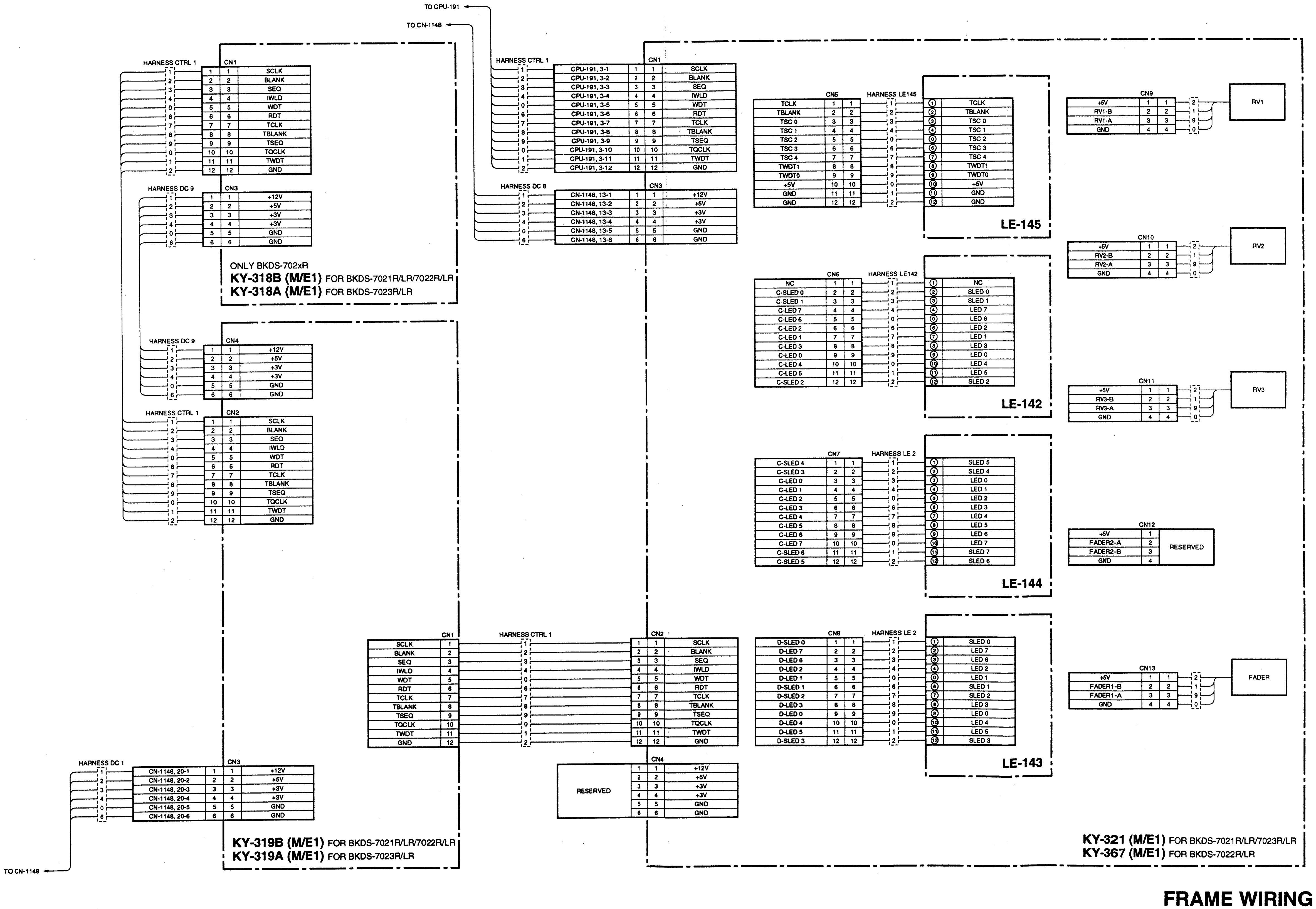

 BKDS-702xR/702xLR FRAME (5/10)

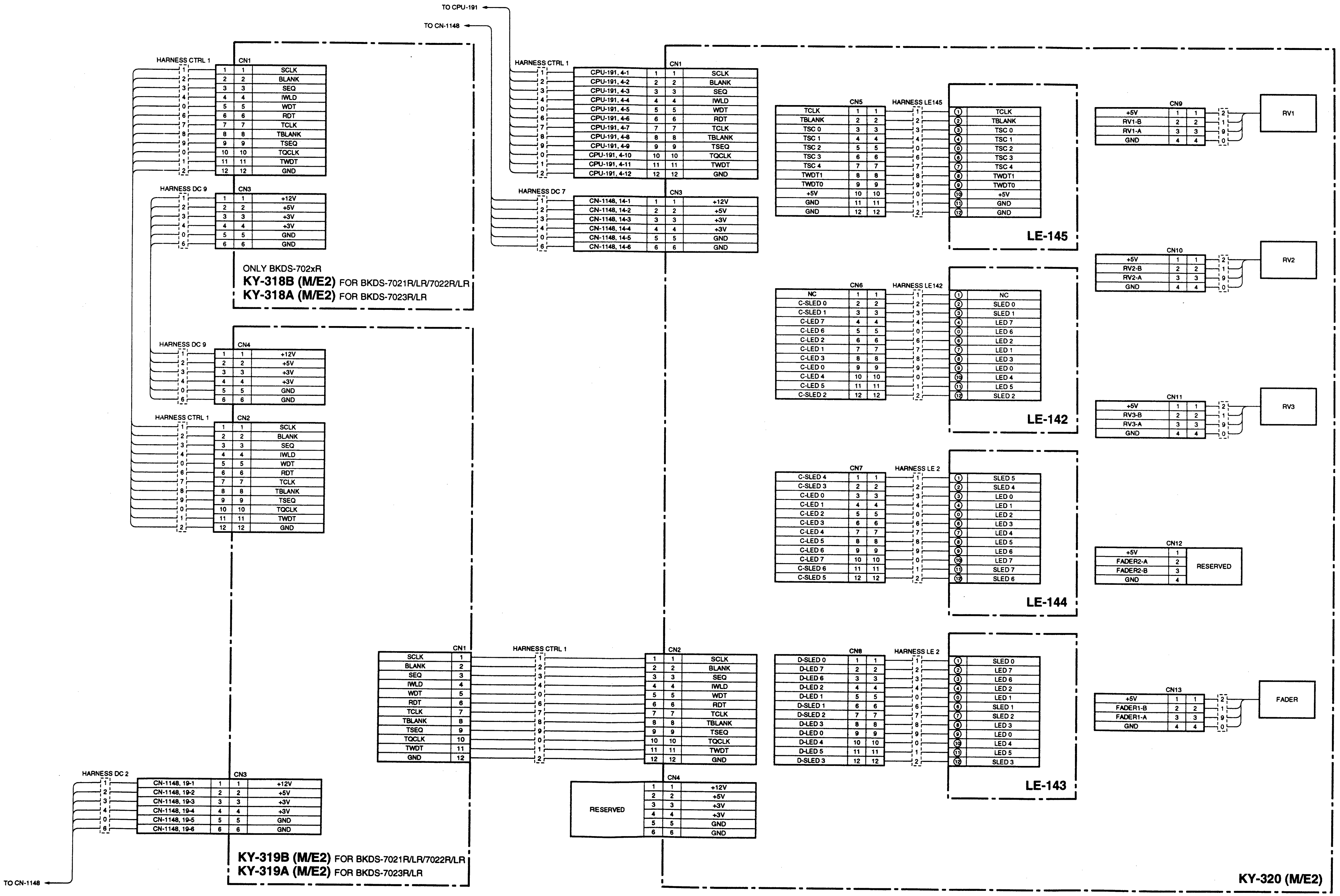

FRAME WIRING (5/10)

BKDS-702xR/702xLR

 BKDS-702xR/702xLR FRAME (6/10)

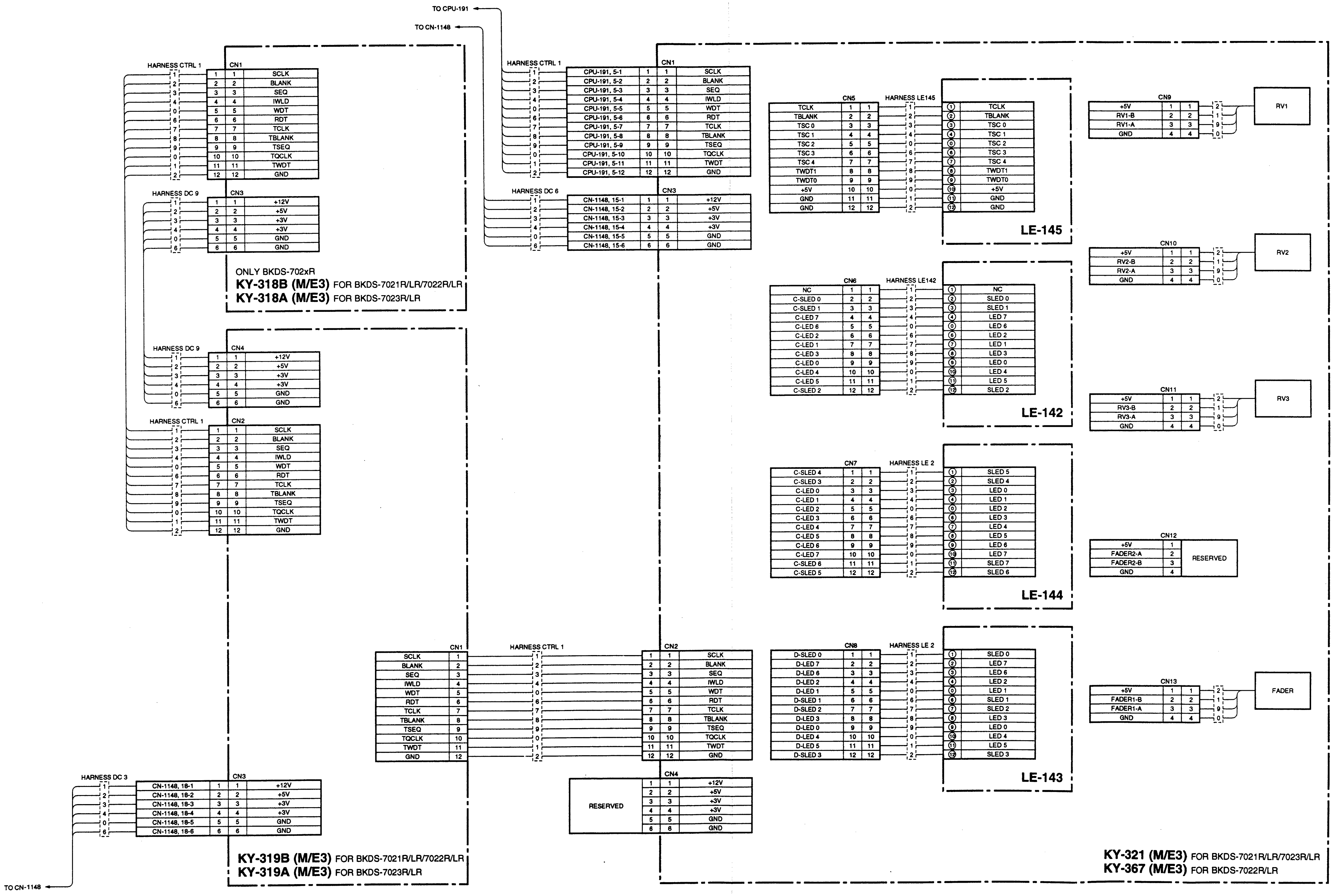

FRAME WIRING (6/10)

BKDS-702xR/702xLR

 BKDS-702xR/702xLR FRAME (7/10)

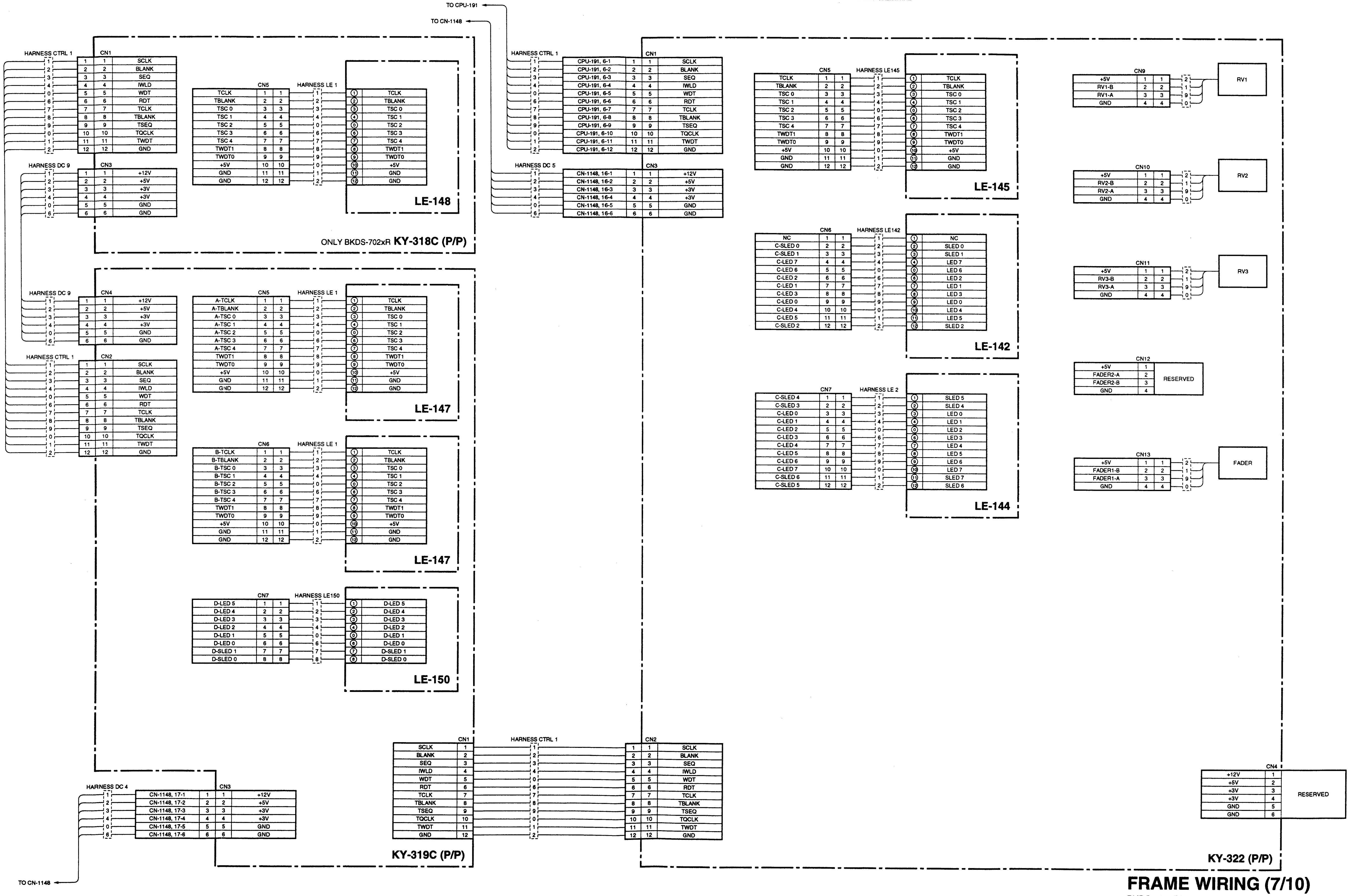

FRAME WIRING (7/10)

BKDS-702xR/702xLR

 BKDS-702xR/702xLR FRAME (8/10)

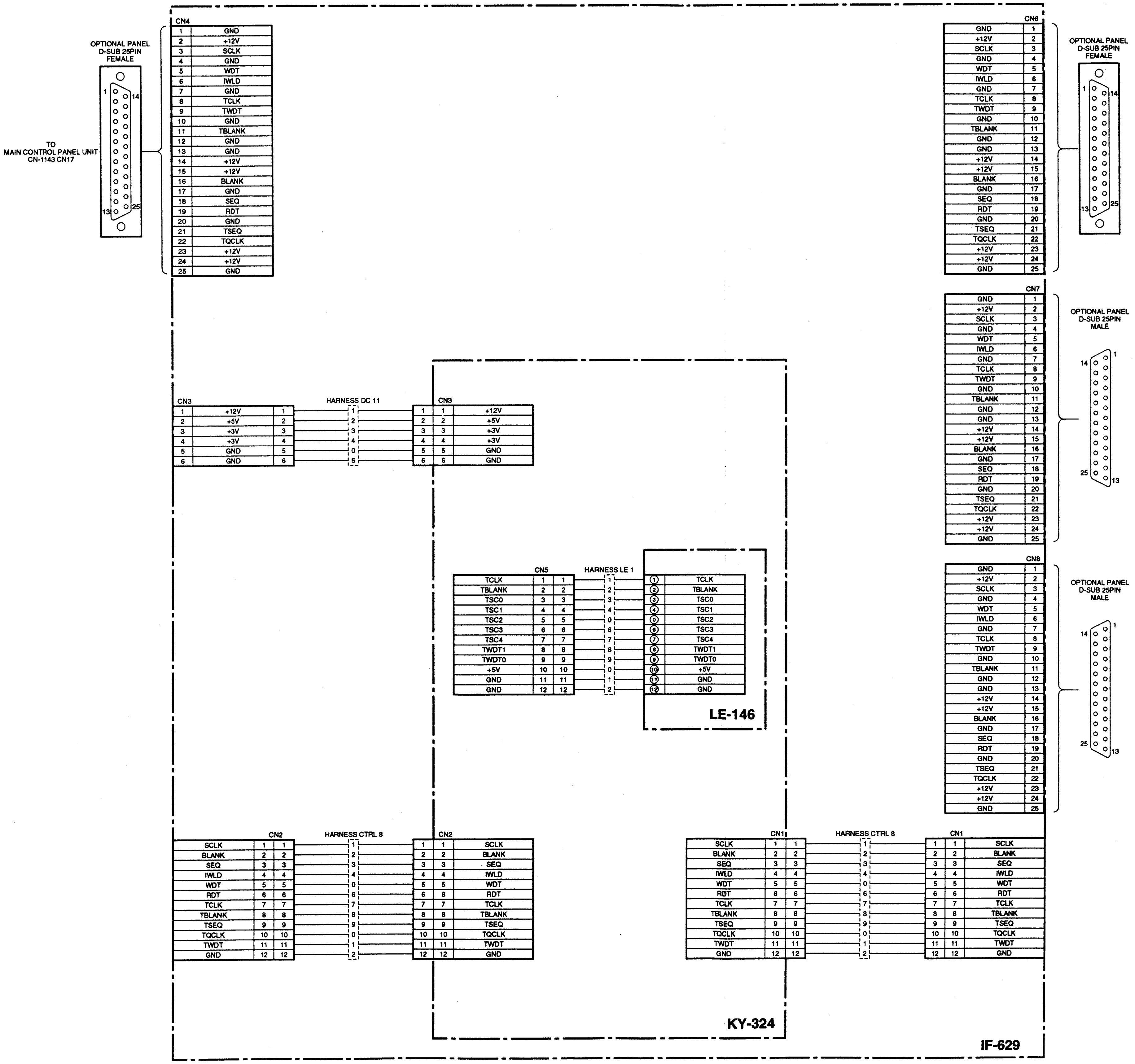

FRAME WIRING (8/10)

BKDS-702xR/702xLR

 2-59

 BKDS-702xR/702xLR FRAME (9/10)

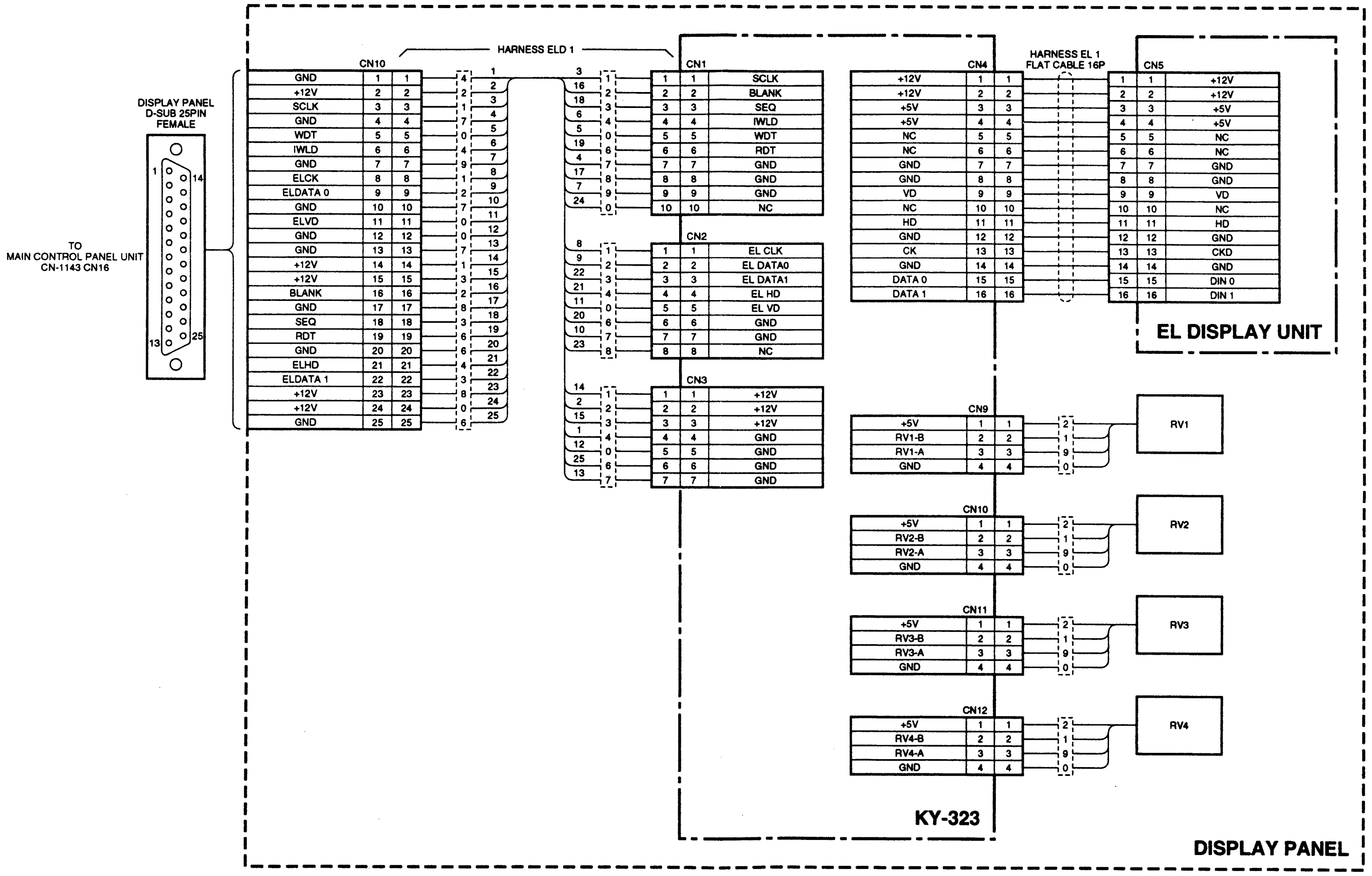

FRAME WIRING (9/10)

BKDS-702xR/702xLR

 BKDS-702xR/702xLR FRAME (10/10)

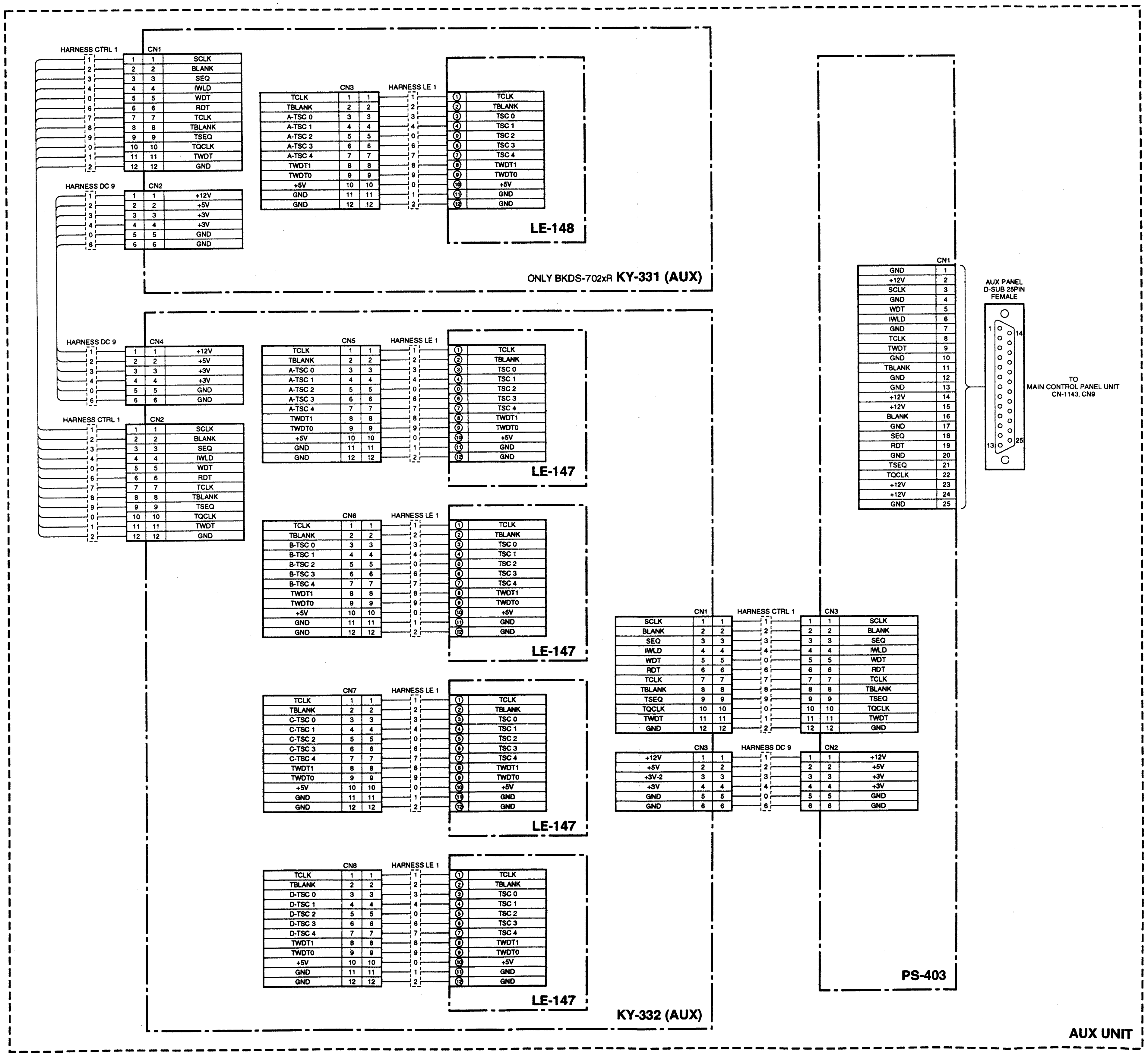

FRAME WIRING (10/10)

BKDS-702xR/702xLR

 2-61

2-8. DMK-7000
DMK-7000 OVERALL BLOCK

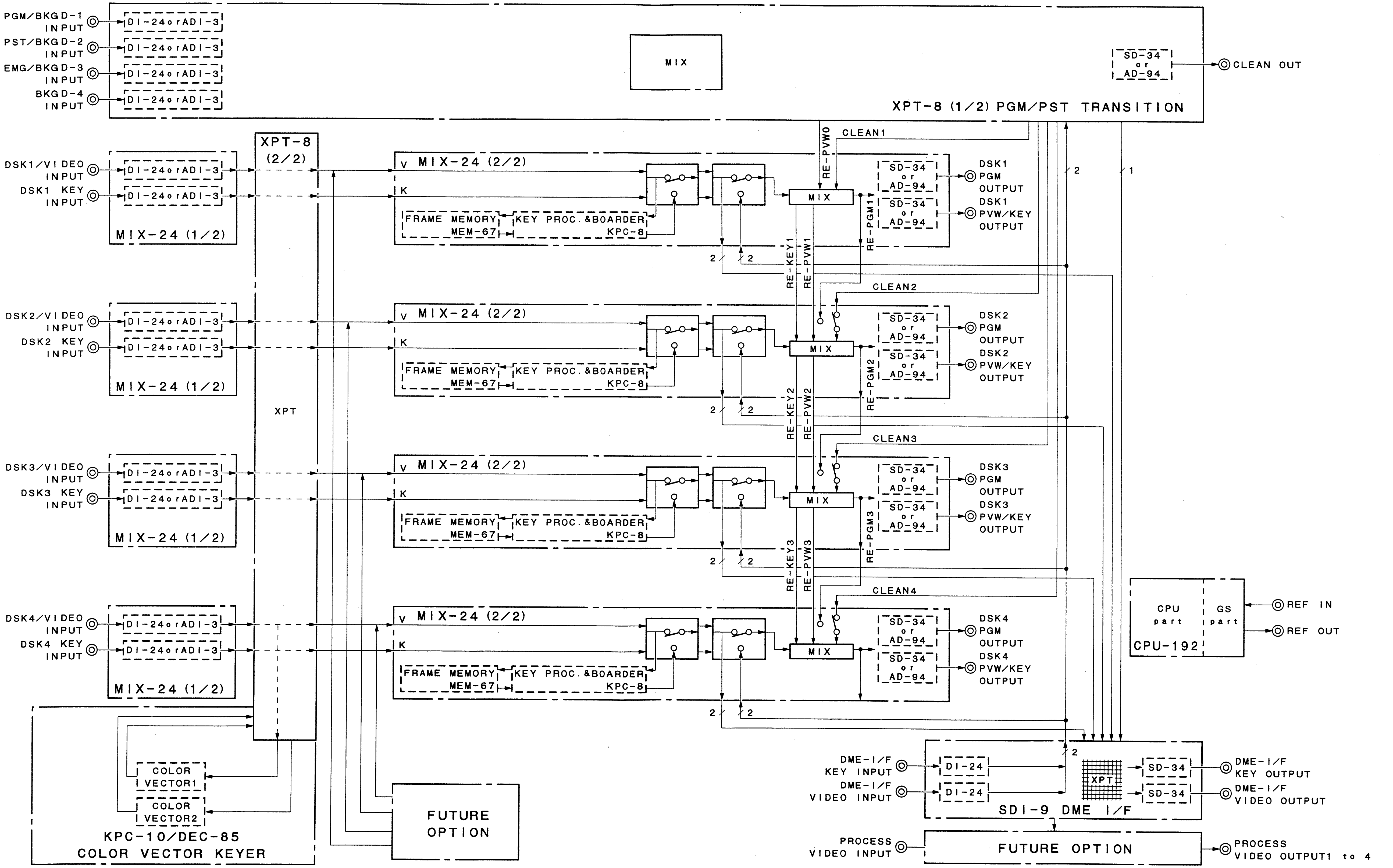

OVERALL BLOCK
DMK-7000
BKDS-7180/7300/7320/7430/7443

DMK-7000 FRAME WIRING

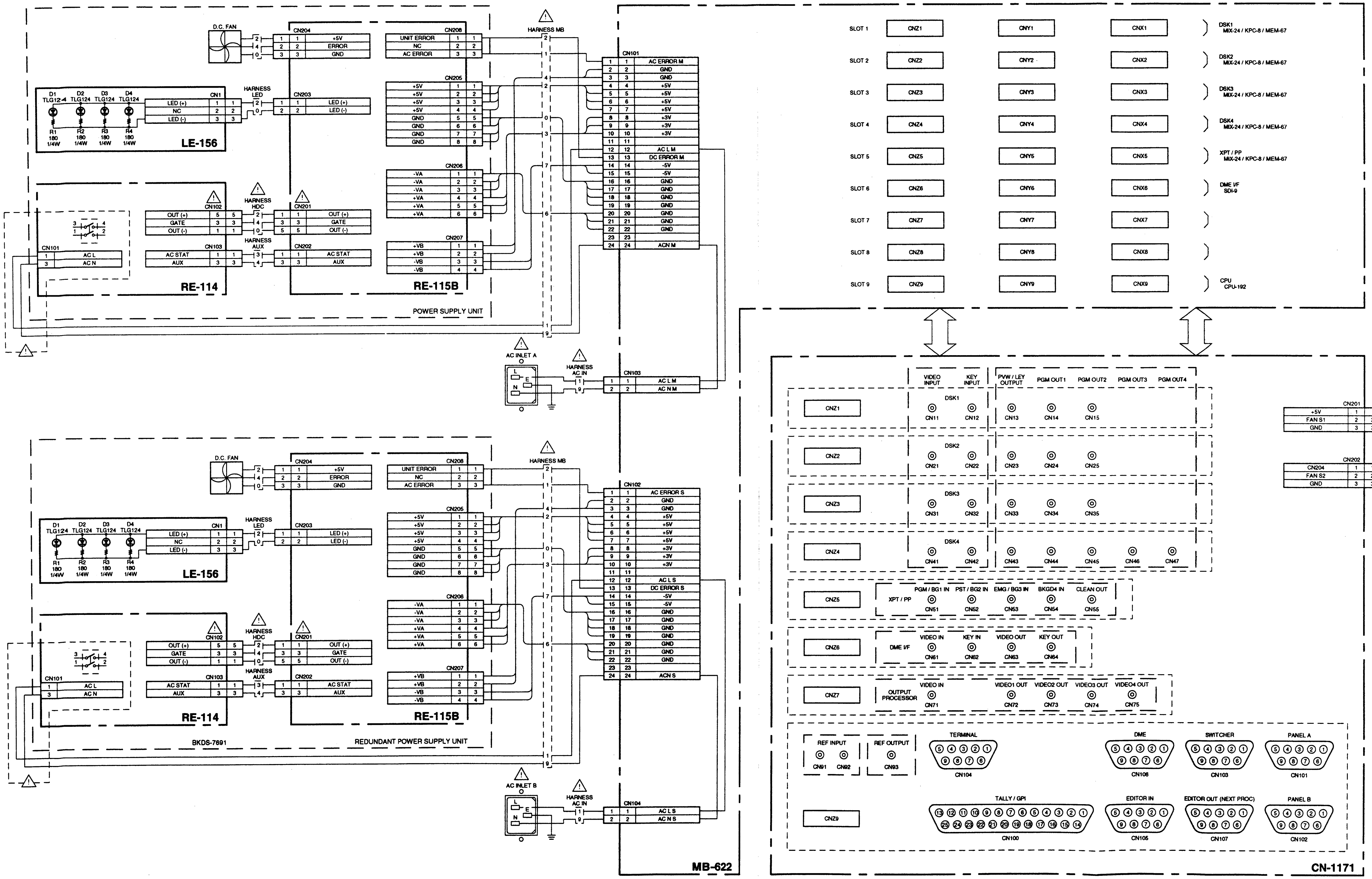

FRAME WIRING

DMK-7000
BKDS-7691

2-9. BKDS-7060
BKDS-7060 OVERALL BLOCK/FRAME WIRING

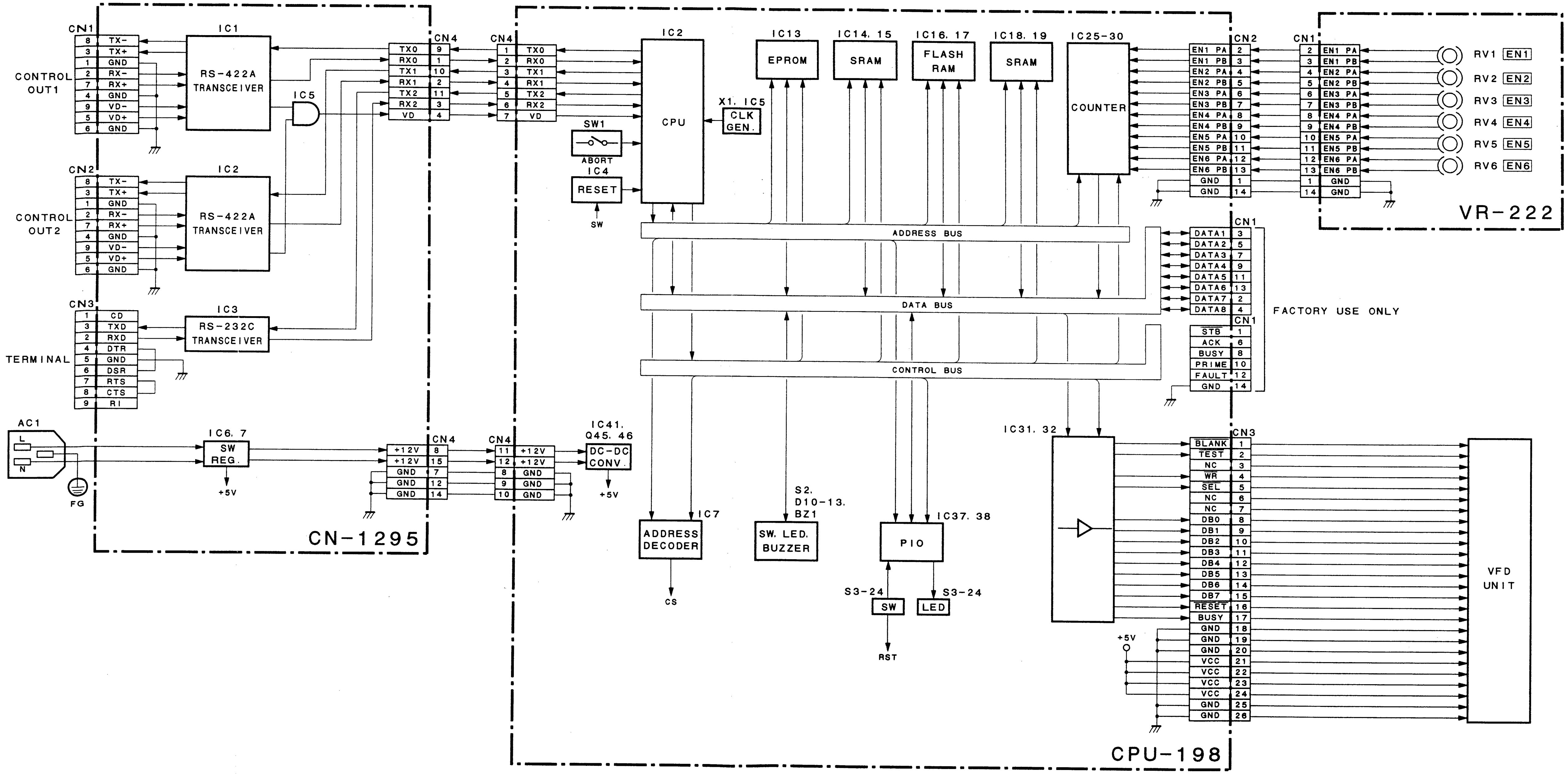

OVERALL BLOCK/FRAME WIRING
BKDS-7060

Section 3
Schematic Diagrams

DVS-M1000C Digital Master Switcher

No.	Board name	Circuit function	Model name	Volume	Page
1	APR-8	Audio Process Board	BKDS-M1810/M1820	Volume 5	3-28
2	APR-9	Audio Process Board	BKDS-M1820	Volume 5	3-44
3	AVD-3	A/V Demultiplex/Multiplex Board	BKDS-M1810	Volume 5	3-50
4	AVD-4	A/V Demultiplex/Multiplex Board	BKDS-M1820	Volume 5	3-58
5	BD-26	Key Border Board	BKDS-7270	Volume 5	3-64
6	CN-1140	Connector Board	DVS-M1000C	Volume 5	3-72
7	CPU-156	System Control Board	DVS-M1000C	Volume 5	3-90
8	DI-22	12 Input Serial Digital Board	BKDS-7102	Volume 5	3-190
9	FM-41	Frame Memory Board	BKDS-M1441	Volume 5	3-220
10	KPC-7	Keyer Expansion Board	BKDS-M1310	Volume 6	3-5
11	LE-156	LED Board	DVS-M1000C/BKDS-M1690	Volume 6	3-129
12	MB-616	Mother Board	DVS-M1000C	Volume 6	3-130
13	MEM-71	Frame Memory Expansion Board	BKDS-M1442	Volume 6	3-166
14	MIX-21	Video Mixer Board	DVS-M1000C	Volume 6	3-170
15	OUT-8	Output Processor Board	DVS-M1000C	Volume 6	3-240
16	RE-114	Power Supply AC-DC Board	DVS-M1000C/BKDS-M1690	Volume 6	3-271
17	RE-115A	Power Supply DC-DC Board	DVS-M1000C/BKDS-M1690	Volume 6	3-272
18	XPT-5	Cross Point Board	DVS-M1000C	Volume 6	3-294

BKDS-M1010 Master Switcher Control Panel

No.	Board name	Circuit function	Model name	Volume	Page
1	CN-1197	Connector Board	BKDS-M1010	Volume 5	3-88
2	CPU-199	System Control Board	BKDS-M1010	Volume 5	3-142
3	IF-533	Audio Fader Interface Board	BKDS-M1040	Volume 5	3-228
4	KY-334	Switch Board	BKDS-M1010	Volume 6	3-104
5	KY-335	Switch Board	BKDS-M1010	Volume 6	3-117
6	LE-152	LED Board	BKDS-M1010	Volume 6	3-129
7	LE-153	LED Board	BKDS-M1010	Volume 6	3-129
8	RE-121	Power Supply Board	BKDS-M1010/M1090	Volume 6	3-275
9	VR-203	Rotary Encoder Board	BKDS-M1010	Volume 6	3-290

DMK-7000 Digital Multi Keyer

No.	Board name	Circuit function	Model name	Volume	Page
1	ADI-3	Analog Composite Input Board	BKDS-7111	Volume 5	3-26
2	CN-1171	Connector Board	DMK-7000	Volume 5	3-84
3	CPU-192	System Control Board	DMK-7000	Volume 5	3-118
4	DA-94	Analog Composite Output Board	BKDS-7161	Volume 5	3-186
5	DEC-85	Color Vector Keyer Board	BKDS-7430	Volume 5	3-188
6	DI-24	Serial Digital Input Board	BKDS-7112	Volume 5	3-203
7	KPC-8	Luminance Keyer/Border Board	BKDS-7320	Volume 6	3-6
8	KPC-10	Luminance Keyer/Border Board	BKDS-7430	Volume 6	3-14
9	LE-156	LED Board	DMK-7000/BKDS-7691	Volume 6	3-129
10	MB-622	Mother Board	DMK-7000	Volume 6	3-156
11	MIX-24	Linear Keyer Board	BKDS-7300	Volume 6	3-194
12	RE-114	Power Supply AC-DC Board	DMK-7000/BKDS-7691	Volume 6	3-271
13	RE-115B	Power Supply DC-DC Board	DMK-7000/BKDS-7691	Volume 6	3-273
14	SD-34	Serial Digital Output Board	BKDS-7162	Volume 6	3-276
15	SDI-9	DME Interface Board	BKDS-7180	Volume 6	3-278
16	XPT-8	Cross Point Board	DMK-7000	Volume 6	3-298

BKDS-7060 Keyer Remote Control Panel

No.	Board name	Circuit function	Model name	Volume	Page
1	CN-1295	Connector Board	BKDS-7060	Volume 5	3-89
2	CPU-198	System Control Board	BKDS-7060	Volume 5	3-136
3	VR-222	Rotary Encoder Board	BKDS-7060	Volume 6	3-291

DVS-7000 Digital Video Switcher

No.	Board name	Circuit function	Model name	Volume	Page
1	ADC-21	Blank Input Adaptor Board	BKDS-7110	Volume 5	3-4
2	ADC-22	Chromakey Analog Component Input Board	BKDS-7133	Volume 5	3-17
3	ADI-3	Analog Composite Input Board	BKDS-7111	Volume 5	3-26
4	BD-26	Key Border Board	BKDS-7270	Volume 5	3-64
5	CN-1145	Connector Board	DVS-7000	Volume 5	3-77
6	CN-1146	Connector Board	DVS-7000	Volume 5	3-80
7	CPU-192	System Control Board	DVS-7000	Volume 5	3-118
8	CRK-10	Chromakey Board	BKDS-2031	Volume 5	3-145
9	CRK-11	Chromakey Upgrade Board	BKDS-2032	Volume 5	3-162
10	DA-94	Analog Composite Output Board	BKDS-7161	Volume 5	3-186
11	DI-22	12 Input Serial Digital Board	BKDS-7102	Volume 5	3-190
12	DI-24	Serial Digital Input Board	BKDS-7112	Volume 5	3-203
13	ENC-34	Encoder Board	BKDS-7133	Volume 5	3-204
14	LE-55	LED Board	DVS-7000/BKDS-7690	Volume 6	3-125
15	MB-618	Mother Board	DVS-7000	Volume 6	3-140
16	MIX-35	Video Mixer Board	DVS-7000	Volume 6	3-204
17	MY-66	Frame Memory Board	BKDS-2041	Volume 6	3-224
18	OUT-9	Output Processor Board	DVS-7000	Volume 6	3-252
19	RAM-18	CPU Expansion Board	DVS-7000	Volume 6	3-264
20	RE-109	Power Supply AC-DC Board	DVS-7000/BKDS-7690	Volume 6	3-268
21	RE-110	Power Supply DC-DC Board	DVS-7000/BKDS-7690	Volume 6	3-269
22	SD-34	Serial Digital Output Board	BKDS-7162	Volume 6	3-276
23	UP-10	ME PVW Board	BKDS-7280	Volume 6	3-288
24	WKG-12	Enhanced Wipe Generator Board	BKDS-2070	Volume 6	3-292
25	XPT-10	Cross Point Board	DVS-7000	Volume 6	3-310
26	YC-59	Frame Memory Adaptor Board	BKDS-7445	Volume 6	3-322

BKDS-7011 Type-3D Switcher Control Panel

No.	Board name	Circuit function	Model name	Volume	Page
1	CN-1143	Connector Board	BKDS-7011	Volume 5	3-74
2	CN-1148	Connector Board	BKDS-7011	Volume 5	3-82
3	CPU-191	System Control Board	BKDS-7011	Volume 5	3-104
4	IF-523	Control Port Expansion Board	BKDS-7001	Volume 5	3-227
5	KY-318A	Switch Board	BKDS-7011	Volume 6	3-20
6	KY-319A	Switch Board	BKDS-7011	Volume 6	3-32
7	KY-320	Switch Board	BKDS-7011	Volume 6	3-50
8	KY-321	Switch Board	BKDS-7011	Volume 6	3-58
9	KY-323	Switch Board	BKDS-7011	Volume 6	3-72
11	KY-324	Switch Board	BKDS-7011	Volume 6	3-78
12	KY-325	Switch Board	BKDS-7032	Volume 6	3-82
13	KY-328	Switch Board	BKDS-7030	Volume 6	3-86
14	KY-329	Switch Board	BKDS-7031	Volume 6	3-92
15	KY-331	Switch Board	BKDS-7011	Volume 6	3-96
16	KY-332	Switch Board	BKDS-7011	Volume 6	3-100
17	LE-142	LED Board	BKDS-7011	Volume 6	3-125
18	LE-143	LED Board	BKDS-7011	Volume 6	3-125
18	LE-144	LED Board	BKDS-7011	Volume 6	3-125
20	LE-145	LED Board	BKDS-7011	Volume 6	3-126
21	LE-146	LED Board	BKDS-7011	Volume 6	3-126
22	LE-147	LED Board	BKDS-7011	Volume 6	3-127
23	LE-148	LED Board	BKDS-7011	Volume 6	3-127
24	LE-150	LED Board	BKDS-7011	Volume 6	3-128
25	RE-112	Power Supply Board	BKDS-7011	Volume 6	3-270

BKDS-7011R Type-3D Switcher Control Panel

No.	Board name	Circuit function	Model name	Volume	Page
1	CN-1143	Connector Board	BKDS-7011R	Volume 5	3-74
2	CN-1148	Connector Board	BKDS-7011R	Volume 5	3-82
3	CPU-191	System Control Board	BKDS-7011R	Volume 5	3-104
4	IF-523	Control Port Expansion Board	BKDS-7001	Volume 5	3-227
5	IF-629	Interface Board	BKDS-7011R	Volume 5	3-231
6	KY-318A	Switch Board	BKDS-7011R	Volume 6	3-20
7	KY-319A	Switch Board	BKDS-7011R	Volume 6	3-32
8	KY-320	Switch Board	BKDS-7011R	Volume 6	3-50
9	KY-321	Switch Board	BKDS-7011R	Volume 6	3-58
10	KY-323	Switch Board	BKDS-7011R	Volume 6	3-72
11	KY-324	Switch Board	BKDS-7011R	Volume 6	3-78
12	KY-325	Switch Board	BKDS-7032	Volume 6	3-82
13	KY-328	Switch Board	BKDS-7030	Volume 6	3-86
14	KY-329	Switch Board	BKDS-7031	Volume 6	3-92
15	KY-331	Switch Board	BKDS-7011R	Volume 6	3-96
16	KY-332	Switch Board	BKDS-7011R	Volume 6	3-100
17	LE-142	LED Board	BKDS-7011R	Volume 6	3-125
18	LE-143	LED Board	BKDS-7011R	Volume 6	3-125
19	LE-144	LED Board	BKDS-7011R	Volume 6	3-125
20	LE-145	LED Board	BKDS-7011R	Volume 6	3-126
21	LE-146	LED Board	BKDS-7011R	Volume 6	3-126
22	LE-147	LED Board	BKDS-7011R	Volume 6	3-127
23	LE-148	LED Board	BKDS-7011R	Volume 6	3-127
24	LE-150	LED Board	BKDS-7011R	Volume 6	3-128
25	RE-112	Power Supply Board	BKDS-7011R	Volume 6	3-270

BKDS-7011LR Type-3D Switcher Control Panel

No.	Board name	Circuit function	Model name	Volume	Page
1	CN-1143	Connector Board	BKDS-7011LR	Volume 5	3-74
2	CN-1148	Connector Board	BKDS-7011LR	Volume 5	3-82
3	CPU-191	System Control Board	BKDS-7011LR	Volume 5	3-104
4	IF-523	Control Port Expansion Board	BKDS-7001	Volume 5	3-227
5	IF-629	Interface Board	BKDS-7011LR	Volume 5	3-231
6	KY-319A	Switch Board	BKDS-7011LR	Volume 6	3-32
7	KY-320	Switch Board	BKDS-7011LR	Volume 6	3-50
8	KY-321	Switch Board	BKDS-7011LR	Volume 6	3-58
9	KY-323	Switch Board	BKDS-7011LR	Volume 6	3-72
10	KY-324	Switch Board	BKDS-7011LR	Volume 6	3-78
11	KY-325	Switch Board	BKDS-7032	Volume 6	3-82
12	KY-328	Switch Board	BKDS-7030	Volume 6	3-86
13	KY-329	Switch Board	BKDS-7031	Volume 6	3-92
14	KY-332	Switch Board	BKDS-7011LR	Volume 6	3-100
15	LE-142	LED Board	BKDS-7011LR	Volume 6	3-125
16	LE-143	LED Board	BKDS-7011LR	Volume 6	3-125
17	LE-144	LED Board	BKDS-7011LR	Volume 6	3-125
18	LE-145	LED Board	BKDS-7011LR	Volume 6	3-126
19	LE-146	LED Board	BKDS-7011LR	Volume 6	3-126
20	LE-147	LED Board	BKDS-7011LR	Volume 6	3-127
21	LE-150	LED Board	BKDS-7011LR	Volume 6	3-128
22	RE-112	Power Supply Board	BKDS-7011LR	Volume 6	3-270

BKDS-7012 Type-3D Switcher Control Panel

No.	Board name	Circuit function	Model name	Volume	Page
1	CN-1143	Connector Board	BKDS-7012	Volume 5	3-74
2	CN-1148	Connector Board	BKDS-7012	Volume 5	3-82
3	CPU-191	System Control Board	BKDS-7012	Volume 5	3-104
4	IF-523	Control Port Expansion Board	BKDS-7001	Volume 5	3-227
5	KY-318B	Switch Board	BKDS-7012	Volume 6	3-24
6	KY-319B	Switch Board	BKDS-7012	Volume 6	3-38
7	KY-320	Switch Board	BKDS-7012	Volume 6	3-50
8	KY-323	Switch Board	BKDS-7012	Volume 6	3-72
9	KY-324	Switch Board	BKDS-7012	Volume 6	3-78
10	KY-325	Switch Board	BKDS-7032	Volume 6	3-82
11	KY-328	Switch Board	BKDS-7030	Volume 6	3-86
12	KY-329	Switch Board	BKDS-7031	Volume 6	3-92
13	KY-331	Switch Board	BKDS-7012	Volume 6	3-96
14	KY-332	Switch Board	BKDS-7012	Volume 6	3-100
15	KY-367	Switch Board	BKDS-7012	Volume 6	3-118
16	LE-142	LED Board	BKDS-7012	Volume 6	3-125
17	LE-143	LED Board	BKDS-7012	Volume 6	3-125
18	LE-144	LED Board	BKDS-7012	Volume 6	3-125
19	LE-145	LED Board	BKDS-7012	Volume 6	3-126
20	LE-146	LED Board	BKDS-7012	Volume 6	3-126
21	LE-147	LED Board	BKDS-7012	Volume 6	3-127
22	LE-148	LED Board	BKDS-7012	Volume 6	3-127
23	LE-150	LED Board	BKDS-7012	Volume 6	3-128
24	RE-112	Power Supply Board	BKDS-7012	Volume 6	3-270

BKDS-7012R Type-3D Switcher Control Panel

No.	Board name	Circuit function	Model name	Volume	Page
1	CN-1143	Connector Board	BKDS-7012R	Volume 5	3-74
2	CN-1148	Connector Board	BKDS-7012R	Volume 5	3-82
3	CPU-191	System Control Board	BKDS-7012R	Volume 5	3-104
4	IF-523	Control Port Expansion Board	BKDS-7001	Volume 5	3-227
5	IF-629	Interface Board	BKDS-7012R	Volume 5	3-231
6	KY-318B	Switch Board	BKDS-7012R	Volume 6	3-24
7	KY-319B	Switch Board	BKDS-7012R	Volume 6	3-38
8	KY-320	Switch Board	BKDS-7012R	Volume 6	3-50
9	KY-323	Switch Board	BKDS-7012R	Volume 6	3-72
10	KY-324	Switch Board	BKDS-7012R	Volume 6	3-78
11	KY-325	Switch Board	BKDS-7032	Volume 6	3-82
12	KY-328	Switch Board	BKDS-7030	Volume 6	3-86
13	KY-329	Switch Board	BKDS-7031	Volume 6	3-92
14	KY-331	Switch Board	BKDS-7012R	Volume 6	3-96
15	KY-332	Switch Board	BKDS-7012R	Volume 6	3-100
16	KY-367	Switch Board	BKDS-7012R	Volume 6	3-118
17	LE-142	LED Board	BKDS-7012R	Volume 6	3-125
18	LE-143	LED Board	BKDS-7012R	Volume 6	3-125
19	LE-144	LED Board	BKDS-7012R	Volume 6	3-125
20	LE-145	LED Board	BKDS-7012R	Volume 6	3-126
21	LE-146	LED Board	BKDS-7012R	Volume 6	3-126
22	LE-147	LED Board	BKDS-7012R	Volume 6	3-127
23	LE-148	LED Board	BKDS-7012R	Volume 6	3-127
24	LE-150	LED Board	BKDS-7012R	Volume 6	3-128
25	RE-112	Power Supply Board	BKDS-7012R	Volume 6	3-270

BKDS-7012LR Type-3D Switcher Control Panel

No.	Board name	Circuit function	Model name	Volume	Page
1	CN-1143	Connector Board	BKDS-7012LR	Volume 5	3-74
2	CN-1148	Connector Board	BKDS-7012LR	Volume 5	3-82
3	CPU-191	System Control Board	BKDS-7012LR	Volume 5	3-104
4	IF-523	Control Port Expansion Board	BKDS-7001	Volume 5	3-227
5	IF-629	Interface Board	BKDS-7012LR	Volume 5	3-231
6	KY-319B	Switch Board	BKDS-7012LR	Volume 6	3-38
7	KY-320	Switch Board	BKDS-7012LR	Volume 6	3-50
8	KY-323	Switch Board	BKDS-7012LR	Volume 6	3-72
9	KY-324	Switch Board	BKDS-7012LR	Volume 6	3-78
10	KY-325	Switch Board	BKDS-7032	Volume 6	3-82
11	KY-328	Switch Board	BKDS-7030	Volume 6	3-86
12	KY-329	Switch Board	BKDS-7031	Volume 6	3-92
13	KY-332	Switch Board	BKDS-7012LR	Volume 6	3-100
14	KY-367	Switch Board	BKDS-7012LR	Volume 6	3-118
15	LE-142	LED Board	BKDS-7012LR	Volume 6	3-125
16	LE-143	LED Board	BKDS-7012LR	Volume 6	3-125
17	LE-144	LED Board	BKDS-7012LR	Volume 6	3-125
18	LE-145	LED Board	BKDS-7012LR	Volume 6	3-126
19	LE-146	LED Board	BKDS-7012LR	Volume 6	3-126
20	LE-147	LED Board	BKDS-7012LR	Volume 6	3-127
21	LE-150	LED Board	BKDS-7012LR	Volume 6	3-128
22	RE-112	Power Supply Board	BKDS-7012LR	Volume 6	3-270

BKDS-7021 Type-4D Switcher Control Panel

No.	Board name	Circuit function	Model name	Volume	Page
1	CN-1143	Connector Board	BKDS-7021	Volume 5	3-74
2	CN-1148	Connector Board	BKDS-7021	Volume 5	3-82
3	CPU-191	System Control Board	BKDS-7021	Volume 5	3-104
4	IF-523	Control Port Expansion Board	BKDS-7001	Volume 5	3-227
5	KY-318B	Switch Board	BKDS-7021	Volume 6	3-24
6	KY-318C	Switch Board	BKDS-7021	Volume 6	3-28
7	KY-319B	Switch Board	BKDS-7021	Volume 6	3-38
8	KY-319C	Switch Board	BKDS-7021	Volume 6	3-44
9	KY-320	Switch Board	BKDS-7021	Volume 6	3-50
10	KY-321	Switch Board	BKDS-7021	Volume 6	3-58
11	KY-322	Switch Board	BKDS-7021	Volume 6	3-66
12	KY-323	Switch Board	BKDS-7021	Volume 6	3-72
13	KY-324	Switch Board	BKDS-7021	Volume 6	3-78
14	KY-328	Switch Board	BKDS-7030	Volume 6	3-86
15	KY-329	Switch Board	BKDS-7031	Volume 6	3-92
16	KY-331	Switch Board	BKDS-7021	Volume 6	3-96
17	KY-332	Switch Board	BKDS-7021	Volume 6	3-100
18	LE-142	LED Board	BKDS-7021	Volume 6	3-125
19	LE-143	LED Board	BKDS-7021	Volume 6	3-125
20	LE-144	LED Board	BKDS-7021	Volume 6	3-125
21	LE-145	LED Board	BKDS-7021	Volume 6	3-126
22	LE-146	LED Board	BKDS-7021	Volume 6	3-126
23	LE-147	LED Board	BKDS-7021	Volume 6	3-127
24	LE-148	LED Board	BKDS-7021	Volume 6	3-127
25	LE-150	LED Board	BKDS-7021	Volume 6	3-128
26	PS-403	DC-DC Converter Board	BKDS-7021	Volume 6	3-263
27	RE-112	Power Supply Board	BKDS-7021	Volume 6	3-270

BKDS-7021R Type-4D Switcher Control Panel

No.	Board name	Circuit function	Model name	Volume	Page
1	CN-1143	Connector Board	BKDS-7021R	Volume 5	3-74
2	CN-1148	Connector Board	BKDS-7021R	Volume 5	3-82
3	CPU-191	System Control Board	BKDS-7021R	Volume 5	3-104
4	IF-523	Control Port Expansion Board	BKDS-7001	Volume 5	3-227
5	IF-629	Interface Board	BKDS-7021R	Volume 5	3-231
6	KY-318B	Switch Board	BKDS-7021R	Volume 6	3-24
7	KY-318C	Switch Board	BKDS-7021R	Volume 6	3-28
8	KY-319B	Switch Board	BKDS-7021R	Volume 6	3-38
9	KY-319C	Switch Board	BKDS-7021R	Volume 6	3-44
10	KY-320	Switch Board	BKDS-7021R	Volume 6	3-50
11	KY-321	Switch Board	BKDS-7021R	Volume 6	3-58
12	KY-322	Switch Board	BKDS-7021R	Volume 6	3-66
13	KY-323	Switch Board	BKDS-7021R	Volume 6	3-72
14	KY-324	Switch Board	BKDS-7021R	Volume 6	3-78
15	KY-328	Switch Board	BKDS-7030	Volume 6	3-86
16	KY-329	Switch Board	BKDS-7031	Volume 6	3-92
17	KY-331	Switch Board	BKDS-7021R	Volume 6	3-96
18	KY-332	Switch Board	BKDS-7021R	Volume 6	3-100
19	LE-142	LED Board	BKDS-7021R	Volume 6	3-125
20	LE-143	LED Board	BKDS-7021R	Volume 6	3-125
21	LE-144	LED Board	BKDS-7021R	Volume 6	3-125
22	LE-145	LED Board	BKDS-7021R	Volume 6	3-126
23	LE-146	LED Board	BKDS-7021R	Volume 6	3-126
24	LE-147	LED Board	BKDS-7021R	Volume 6	3-127
25	LE-148	LED Board	BKDS-7021R	Volume 6	3-127
26	LE-150	LED Board	BKDS-7021R	Volume 6	3-128
27	PS-403	DC-DC Converter Board	BKDS-7021R	Volume 6	3-263
28	RE-112	Power Supply Board	BKDS-7021R	Volume 6	3-270

BKDS-7021LR Type-4D Switcher Control Panel

No.	Board name	Circuit function	Model name	Page	
1	CN-1143	Connector Board	BKDS-7021LR	Volume 5	3-74
2	CN-1148	Connector Board	BKDS-7021LR	Volume 5	3-82
3	CPU-191	System Control Board	BKDS-7021LR	Volume 5	3-104
4	IF-523	Control Port Expansion Board	BKDS-7001	Volume 5	3-227
5	IF-629	Interface Board	BKDS-7021LR	Volume 5	3-231
6	KY-319B	Switch Board	BKDS-7021LR	Volume 6	3-38
7	KY-319C	Switch Board	BKDS-7021LR	Volume 6	3-44
8	KY-320	Switch Board	BKDS-7021LR	Volume 6	3-50
9	KY-321	Switch Board	BKDS-7021LR	Volume 6	3-58
10	KY-322	Switch Board	BKDS-7021LR	Volume 6	3-66
11	KY-323	Switch Board	BKDS-7021LR	Volume 6	3-72
12	KY-324	Switch Board	BKDS-7021LR	Volume 6	3-78
13	KY-328	Switch Board	BKDS-7030	Volume 6	3-86
14	KY-329	Switch Board	BKDS-7031	Volume 6	3-92
15	KY-332	Switch Board	BKDS-7021LR	Volume 6	3-100
16	LE-142	LED Board	BKDS-7021LR	Volume 6	3-125
17	LE-143	LED Board	BKDS-7021LR	Volume 6	3-125
18	LE-144	LED Board	BKDS-7021LR	Volume 6	3-125
19	LE-145	LED Board	BKDS-7021LR	Volume 6	3-126
20	LE-146	LED Board	BKDS-7021LR	Volume 6	3-126
21	LE-147	LED Board	BKDS-7021LR	Volume 6	3-127
22	LE-150	LED Board	BKDS-7021LR	Volume 6	3-128
23	PS-403	DC-DC Converter Board	BKDS-7021LR	Volume 6	3-263
24	RE-112	Power Supply Board	BKDS-7021LR	Volume 6	3-270

BKDS-7022 Type-4D Switcher Control Panel

No.	Board name	Circuit function	Model name	Volume	Page
1	CN-1143	Connector Board	BKDS-7022	Volume 5	3-74
2	CN-1148	Connector Board	BKDS-7022	Volume 5	3-82
3	CPU-191	System Control Board	BKDS-7022	Volume 5	3-104
4	IF-523	Control Port Expansion Board	BKDS-7001	Volume 5	3-227
5	KY-318B	Switch Board	BKDS-7022	Volume 6	3-24
6	KY-318C	Switch Board	BKDS-7022	Volume 6	3-28
7	KY-319B	Switch Board	BKDS-7022	Volume 6	3-28
8	KY-319C	Switch Board	BKDS-7022	Volume 6	3-44
9	KY-320	Switch Board	BKDS-7022	Volume 6	3-50
10	KY-322	Switch Board	BKDS-7022	Volume 6	3-66
11	KY-323	Switch Board	BKDS-7022	Volume 6	3-72
12	KY-324	Switch Board	BKDS-7022	Volume 6	3-78
13	KY-328	Switch Board	BKDS-7030	Volume 6	3-86
14	KY-329	Switch Board	BKDS-7031	Volume 6	3-92
15	KY-331	Switch Board	BKDS-7022	Volume 6	3-96
16	KY-332	Switch Board	BKDS-7022	Volume 6	3-100
17	KY-367	Switch Board	BKDS-7022	Volume 6	3-118
18	LE-142	LED Board	BKDS-7022	Volume 6	3-125
19	LE-143	LED Board	BKDS-7022	Volume 6	3-125
20	LE-144	LED Board	BKDS-7022	Volume 6	3-125
21	LE-145	LED Board	BKDS-7022	Volume 6	3-126
22	LE-146	LED Board	BKDS-7022	Volume 6	3-126
23	LE-147	LED Board	BKDS-7022	Volume 6	3-127
24	LE-148	LED Board	BKDS-7022	Volume 6	3-127
25	LE-150	LED Board	BKDS-7022	Volume 6	3-128
26	PS-403	DC-DC Converter Board	BKDS-7022	Volume 6	3-263
27	RE-112	Power Supply Board	BKDS-7022	Volume 6	3-270

BKDS-7022R Type-4D Switcher Control Panel

No.	Board name	Circuit function	Model name	Volume	Page
1	CN-1143	Connector Board	BKDS-7022R	Volume 5	3-74
2	CN-1148	Connector Board	BKDS-7022R	Volume 5	3-82
3	CPU-191	System Control Board	BKDS-7022R	Volume 5	3-104
4	IF-523	Control Port Expansion Board	BKDS-7001	Volume 5	3-227
5	IF-629	Interface Board	BKDS-7022R	Volume 5	3-231
6	KY-318B	Switch Board	BKDS-7022R	Volume 6	3-24
7	KY-318C	Switch Board	BKDS-7022R	Volume 6	3-28
8	KY-319B	Switch Board	BKDS-7022R	Volume 6	3-38
9	KY-319C	Switch Board	BKDS-7022R	Volume 6	3-44
10	KY-320	Switch Board	BKDS-7022R	Volume 6	3-50
11	KY-322	Switch Board	BKDS-7022R	Volume 6	3-66
12	KY-323	Switch Board	BKDS-7022R	Volume 6	3-72
13	KY-324	Switch Board	BKDS-7022R	Volume 6	3-78
14	KY-328	Switch Board	BKDS-7030	Volume 6	3-86
15	KY-329	Switch Board	BKDS-7031	Volume 6	3-92
16	KY-331	Switch Board	BKDS-7022R	Volume 6	3-96
17	KY-332	Switch Board	BKDS-7022R	Volume 6	3-100
18	KY-367	Switch Board	BKDS-7022R	Volume 6	3-118
19	LE-142	LED Board	BKDS-7022R	Volume 6	3-125
20	LE-143	LED Board	BKDS-7022R	Volume 6	3-125
21	LE-144	LED Board	BKDS-7022R	Volume 6	3-125
22	LE-145	LED Board	BKDS-7022R	Volume 6	3-126
23	LE-146	LED Board	BKDS-7022R	Volume 6	3-126
24	LE-147	LED Board	BKDS-7022R	Volume 6	3-127
25	LE-148	LED Board	BKDS-7022R	Volume 6	3-127
26	LE-150	LED Board	BKDS-7022R	Volume 6	3-128
27	PS-403	DC-DC Converter Board	BKDS-7022R	Volume 6	3-263
28	RE-112	Power Supply Board	BKDS-7022R	Volume 6	3-270

BKDS-7022LR Type-4D Switcher Control Panel

No.	Board name	Circuit function	Model name	Volume	Page
1	CN-1143	Connector Board	BKDS-7022LR	Volume 5	3-74
2	CN-1148	Connector Board	BKDS-7022LR	Volume 5	3-82
3	CPU-191	System Control Board	BKDS-7022LR	Volume 5	3-104
4	IF-523	Control Port Expansion Board	BKDS-7001	Volume 5	3-227
5	IF-629	Interface Board	BKDS-7022LR	Volume 5	3-231
6	KY-319B	Switch Board	BKDS-7022LR	Volume 6	3-38
7	KY-319C	Switch Board	BKDS-7022LR	Volume 6	3-44
8	KY-320	Switch Board	BKDS-7022LR	Volume 6	3-50
9	KY-322	Switch Board	BKDS-7022LR	Volume 6	3-66
10	KY-323	Switch Board	BKDS-7022LR	Volume 6	3-72
11	KY-324	Switch Board	BKDS-7022LR	Volume 6	3-78
12	KY-328	Switch Board	BKDS-7030	Volume 6	3-86
13	KY-329	Switch Board	BKDS-7031	Volume 6	3-92
14	KY-332	Switch Board	BKDS-7022LR	Volume 6	3-100
15	KY-367	Switch Board	BKDS-7022LR	Volume 6	3-118
16	LE-142	LED Board	BKDS-7022LR	Volume 6	3-125
17	LE-143	LED Board	BKDS-7022LR	Volume 6	3-125
18	LE-144	LED Board	BKDS-7022LR	Volume 6	3-125
19	LE-145	LED Board	BKDS-7022LR	Volume 6	3-126
20	LE-146	LED Board	BKDS-7022LR	Volume 6	3-126
21	LE-147	LED Board	BKDS-7022LR	Volume 6	3-127
22	LE-150	LED Board	BKDS-7022LR	Volume 6	3-128
23	PS-403	DC-DC Converter Board	BKDS-7022LR	Volume 6	3-263
24	RE-112	Power Supply Board	BKDS-7022LR	Volume 6	3-270

BKDS-7023 Type-4D Switcher Control Panel

No.	Board name	Circuit function	Model name	Volume	Page
1	CN-1143	Connector Board	BKDS-7023	Volume 5	3-74
2	CN-1148	Connector Board	BKDS-7023	Volume 5	3-82
3	CPU-191	System Control Board	BKDS-7023	Volume 5	3-104
4	IF-523	Control Port Expansion Board	BKDS-7001	Volume 5	3-227
5	KY-318A	Switch Board	BKDS-7023	Volume 6	3-20
6	KY-318C	Switch Board	BKDS-7023	Volume 6	3-28
7	KY-319A	Switch Board	BKDS-7023	Volume 6	3-32
8	KY-319C	Switch Board	BKDS-7023	Volume 6	3-44
9	KY-320	Switch Board	BKDS-7023	Volume 6	3-50
10	KY-321	Switch Board	BKDS-7023	Volume 6	3-58
11	KY-322	Switch Board	BKDS-7023	Volume 6	3-66
12	KY-323	Switch Board	BKDS-7023	Volume 6	3-72
13	KY-324	Switch Board	BKDS-7023	Volume 6	3-78
14	KY-328	Switch Board	BKDS-7030	Volume 6	3-86
15	KY-329	Switch Board	BKDS-7031	Volume 6	3-92
16	KY-331	Switch Board	BKDS-7023	Volume 6	3-96
17	KY-332	Switch Board	BKDS-7023	Volume 6	3-100
18	LE-142	LED Board	BKDS-7023	Volume 6	3-125
19	LE-143	LED Board	BKDS-7023	Volume 6	3-125
20	LE-144	LED Board	BKDS-7023	Volume 6	3-125
21	LE-145	LED Board	BKDS-7023	Volume 6	3-126
22	LE-146	LED Board	BKDS-7023	Volume 6	3-126
23	LE-147	LED Board	BKDS-7023	Volume 6	3-127
24	LE-148	LED Board	BKDS-7023	Volume 6	3-127
25	LE-150	LED Board	BKDS-7023	Volume 6	3-128
26	PS-403	DC-DC Converter Board	BKDS-7023	Volume 6	3-263
27	RE-112	Power Supply Board	BKDS-7023	Volume 6	3-270

BKDS-7023R Type-4D Switcher Control Panel

No.	Board name	Circuit function	Model name	Volume	Page
1	CN-1143	Connector Board	BKDS-7023R	Volume 5	3-74
2	CN-1148	Connector Board	BKDS-7023R	Volume 5	3-82
3	CPU-191	System Control Board	BKDS-7023R	Volume 5	3-104
4	IF-523	Control Port Expansion Board	BKDS-7001	Volume 5	3-227
5	IF-629	Interface Board	BKDS-7023R	Volume 5	3-231
6	KY-318A	Switch Board	BKDS-7023R	Volume 6	3-20
7	KY-318C	Switch Board	BKDS-7023R	Volume 6	3-28
8	KY-319A	Switch Board	BKDS-7023R	Volume 6	3-32
9	KY-319C	Switch Board	BKDS-7023R	Volume 6	3-44
10	KY-320	Switch Board	BKDS-7023R	Volume 6	3-50
11	KY-321	Switch Board	BKDS-7023R	Volume 6	3-58
12	KY-322	Switch Board	BKDS-7023R	Volume 6	3-66
13	KY-323	Switch Board	BKDS-7023R	Volume 6	3-72
14	KY-324	Switch Board	BKDS-7023R	Volume 6	3-78
15	KY-328	Switch Board	BKDS-7030	Volume 6	3-86
16	KY-329	Switch Board	BKDS-7031	Volume 6	3-92
17	KY-331	Switch Board	BKDS-7023R	Volume 6	3-96
18	KY-332	Switch Board	BKDS-7023R	Volume 6	3-100
19	LE-142	LED Board	BKDS-7023R	Volume 6	3-125
20	LE-143	LED Board	BKDS-7023R	Volume 6	3-125
21	LE-144	LED Board	BKDS-7023R	Volume 6	3-125
22	LE-145	LED Board	BKDS-7023R	Volume 6	3-126
23	LE-146	LED Board	BKDS-7023R	Volume 6	3-126
24	LE-147	LED Board	BKDS-7023R	Volume 6	3-127
25	LE-148	LED Board	BKDS-7023R	Volume 6	3-127
26	LE-150	LED Board	BKDS-7023R	Volume 6	3-128
27	PS-403	DC-DC Converter Board	BKDS-7023R	Volume 6	3-263
28	RE-112	Power Supply Board	BKDS-7023R	Volume 6	3-270

BKDS-7023LR Type-4D Switcher Control Panel

No.	Board name	Circuit function	Model name	Volume	Page
1	CN-1143	Connector Board	BKDS-7023LR	Volume 5	3-74
2	CN-1148	Connector Board	BKDS-7023LR	Volume 5	3-82
3	CPU-191	System Control Board	BKDS-7023LR	Volume 5	3-104
4	IF-523	Control Port Expansion Board	BKDS-7001	Volume 5	3-227
5	IF-629	Interface Board	BKDS-7023LR	Volume 5	3-231
6	KY-319A	Switch Board	BKDS-7023LR	Volume 6	3-32
7	KY-319C	Switch Board	BKDS-7023LR	Volume 6	3-44
8	KY-320	Switch Board	BKDS-7023LR	Volume 6	3-50
9	KY-321	Switch Board	BKDS-7023LR	Volume 6	3-58
10	KY-322	Switch Board	BKDS-7023LR	Volume 6	3-66
11	KY-323	Switch Board	BKDS-7023LR	Volume 6	3-72
12	KY-324	Switch Board	BKDS-7023LR	Volume 6	3-78
13	KY-328	Switch Board	BKDS-7030	Volume 6	3-86
14	KY-329	Switch Board	BKDS-7031	Volume 6	3-92
15	KY-332	Switch Board	BKDS-7023LR	Volume 6	3-100
16	LE-142	LED Board	BKDS-7023LR	Volume 6	3-125
17	LE-143	LED Board	BKDS-7023LR	Volume 6	3-125
18	LE-144	LED Board	BKDS-7023LR	Volume 6	3-125
19	LE-145	LED Board	BKDS-7023LR	Volume 6	3-126
20	LE-146	LED Board	BKDS-7023LR	Volume 6	3-126
21	LE-147	LED Board	BKDS-7023LR	Volume 6	3-127
22	LE-150	LED Board	BKDS-7023LR	Volume 6	3-128
23	PS-403	DC-DC Converter Board	BKDS-7023LR	Volume 6	3-263
24	RE-112	Power Supply Board	BKDS-7023LR	Volume 6	3-270

3-3

BKDS-7110 (SY) : S/N 10001 and Higher

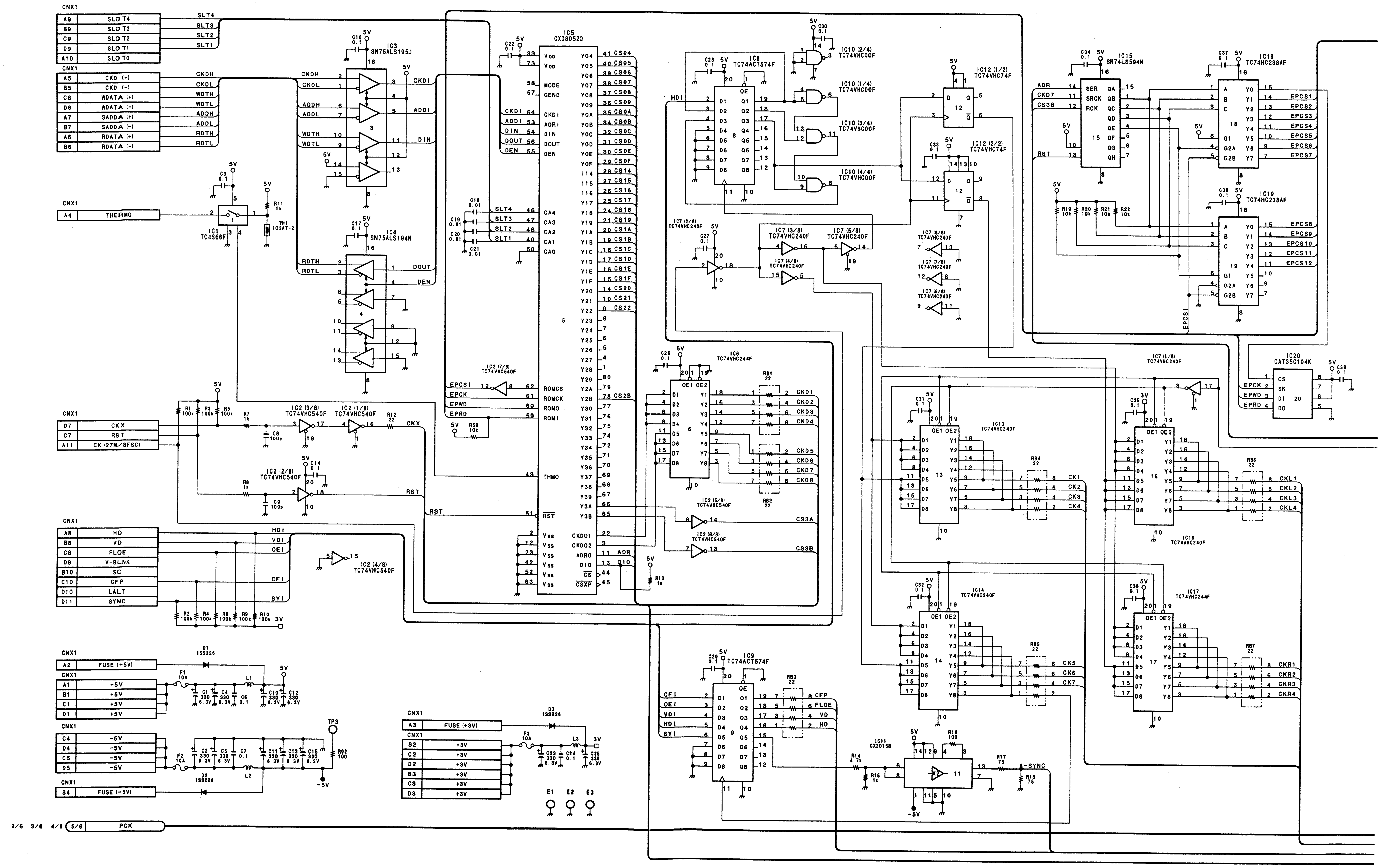

1
2
3
4
5

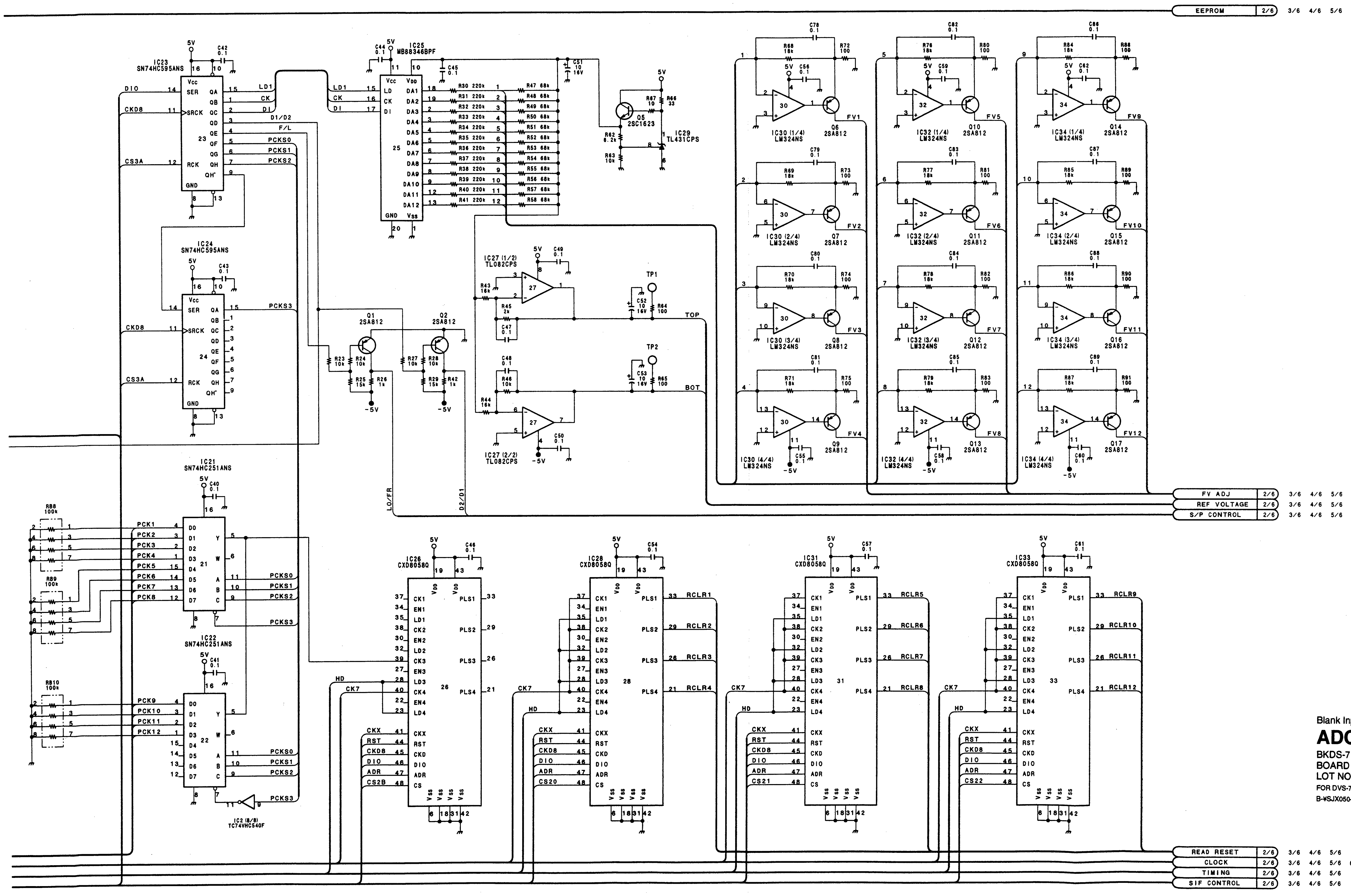

Blank Input Adaptor Board

ADC-21 (1/6)

BKDS-7110
BOARD NO. 1-658-409-11
LOT NO. 507-
FOR DVS-7000
B-¥SJX050-ADC21

I J K L M N O P

ADC-21 (2/6) Blank Input Adaptor Board

BKDS-7110 (SY) : S/N 10001 and Higher

1

2

3

4

5

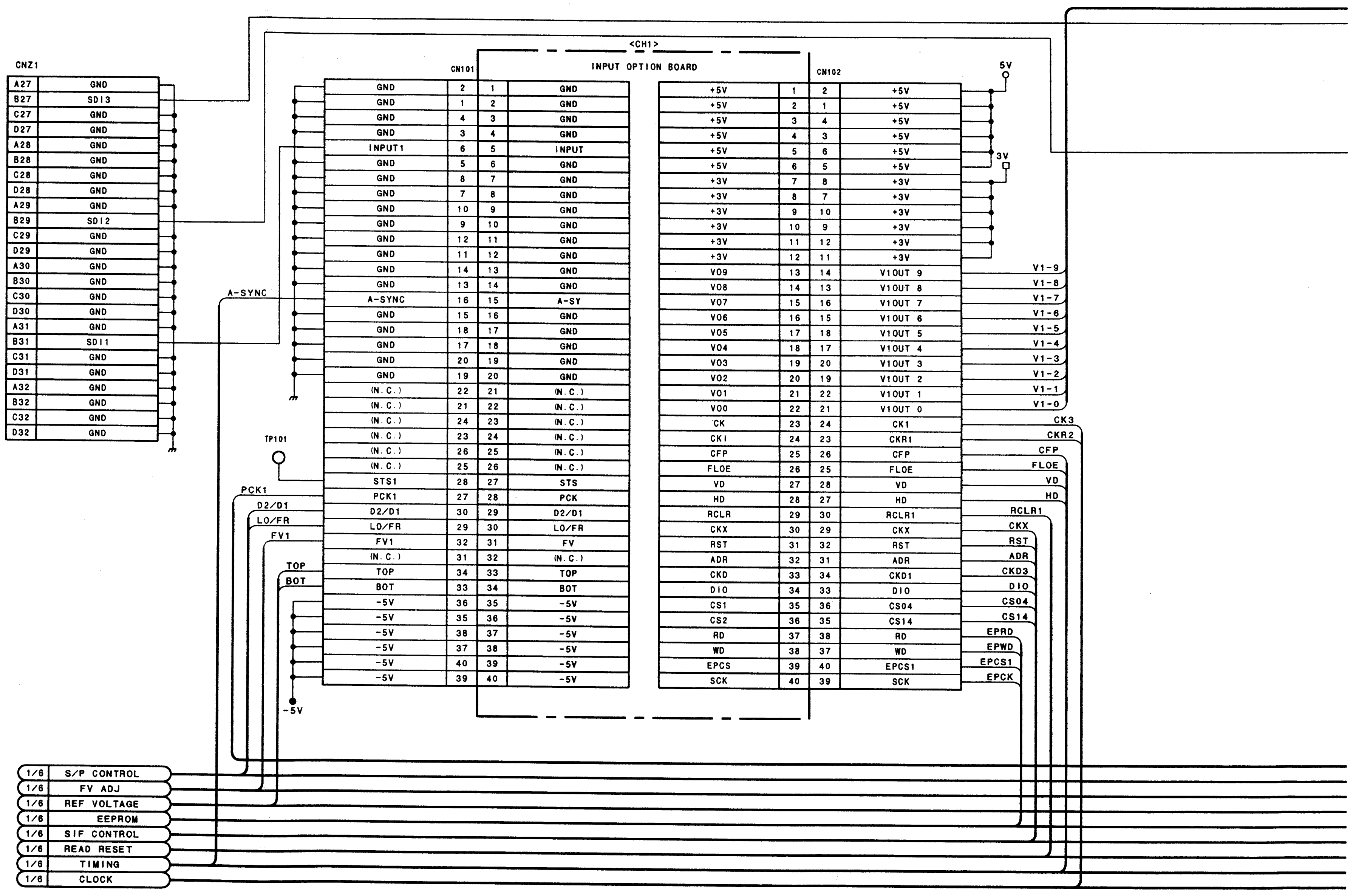

3-6

A | B | C | D | E | F | G | H

1

2

3

4

5

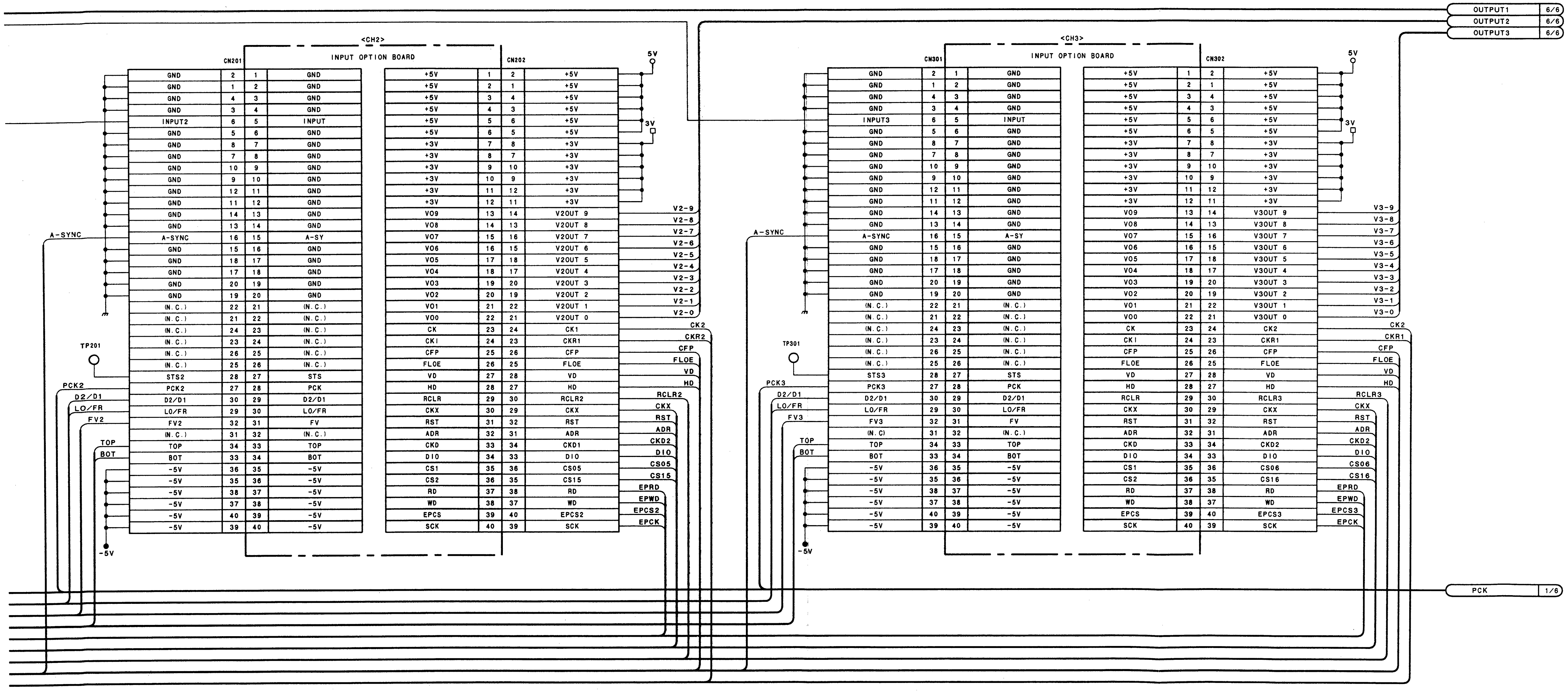

Blank Input Adaptor Board
ADC-21 (2/6)
BKDS-7110
BOARD NO. 1-658-409-11
LOT NO. 507-
FOR DVS-7000
B-¥SJX050-ADC21

ADC-21 (3/6) Blank Input Adaptor Board

BKDS-7110 (SY) : S/N 10001 and Higher

1

2

3

4

5

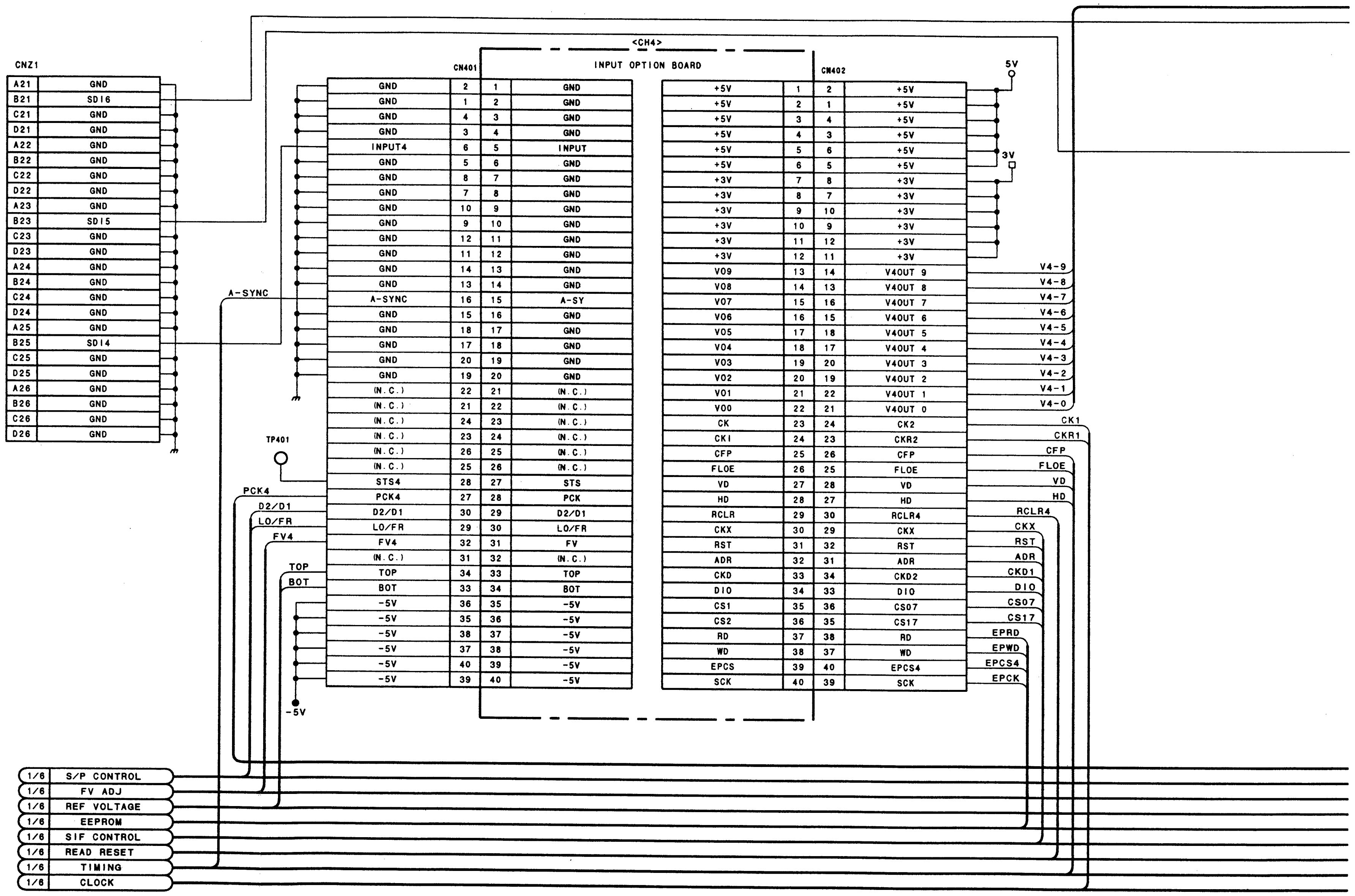

A B C D E F G H

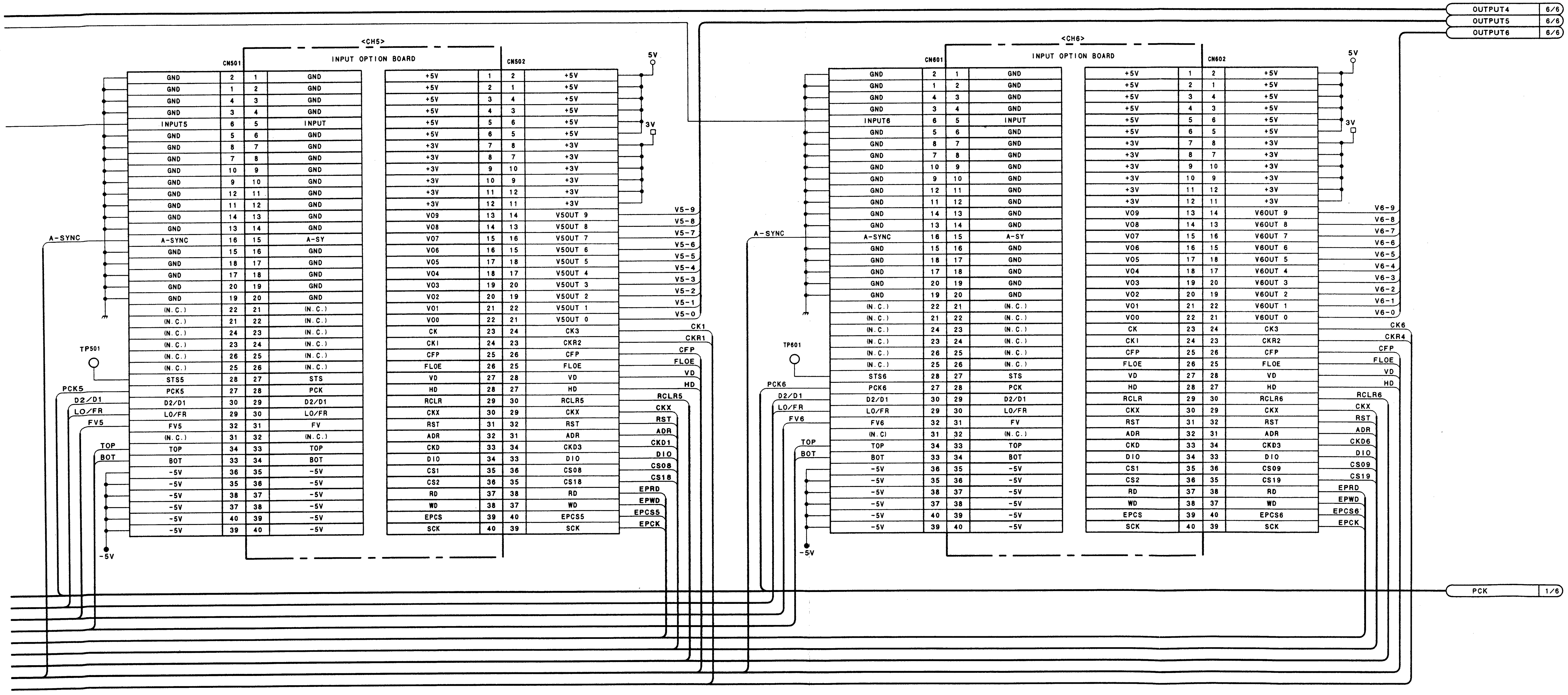

Blank Input Adaptor Board

ADC-21 (3/6)

BKDS-7110
BOARD NO. 1-658-409-11
LOT NO. 507-
FOR DVS-7000
B-¥SJX050-ADC21

BKDS-7110 (SY) : S/N 10001 and Higher

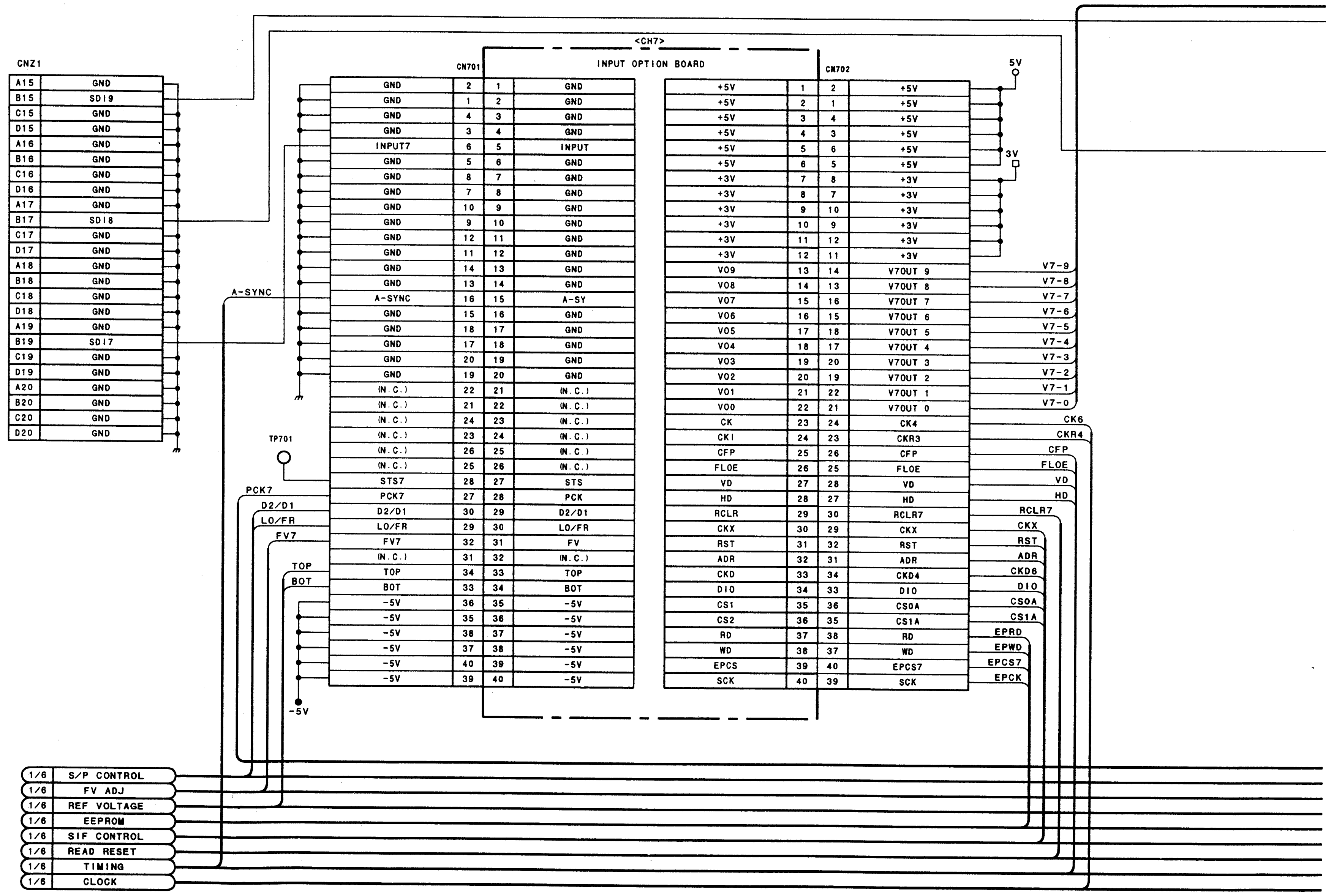

1
2
3
4
5

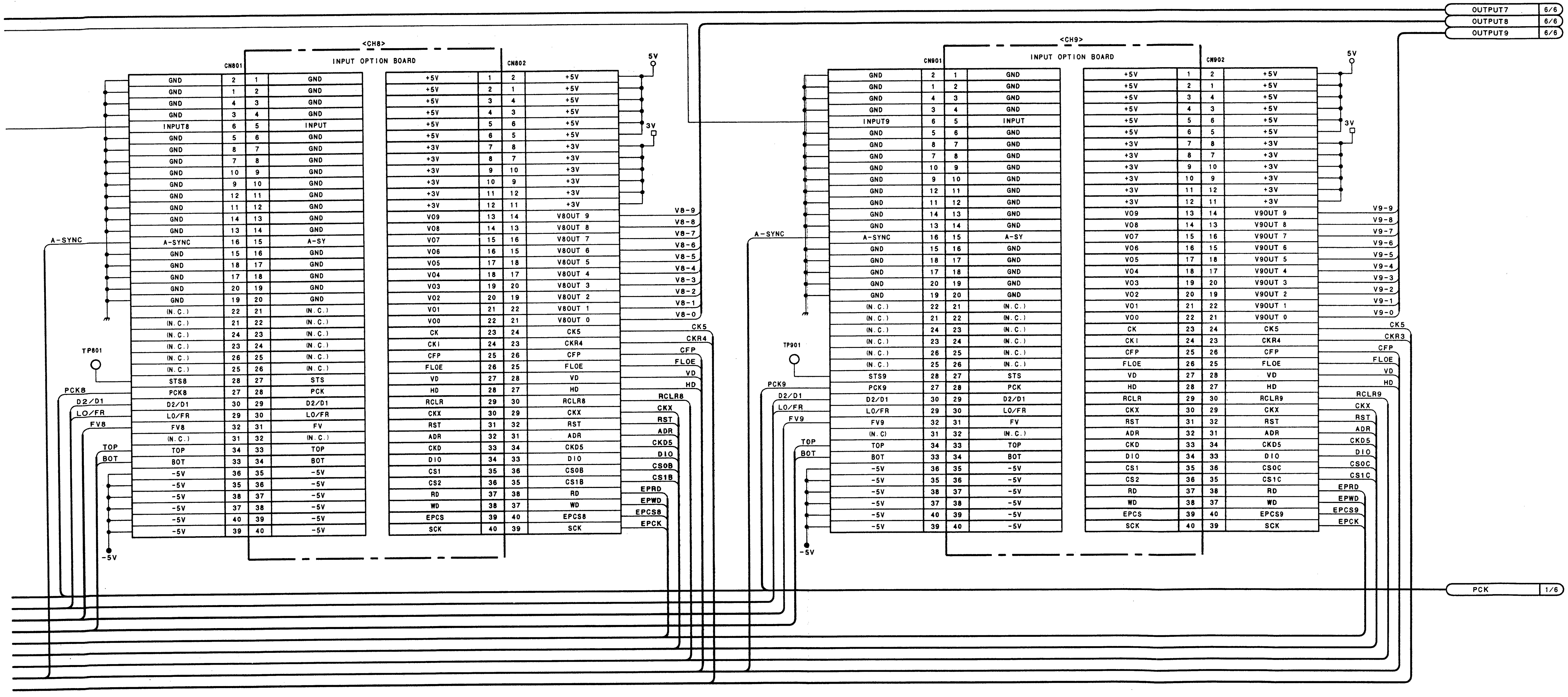

Blank Input Adaptor Board
ADC-21 (4/6)
BKDS-7110
BOARD NO. 1-658-409-11
LOT NO. 507-
FOR DVS-7000
B-¥SJX050-ADC21

BKDS-7110 (SY) : S/N 10001 and Higher

1

2

3

4

5

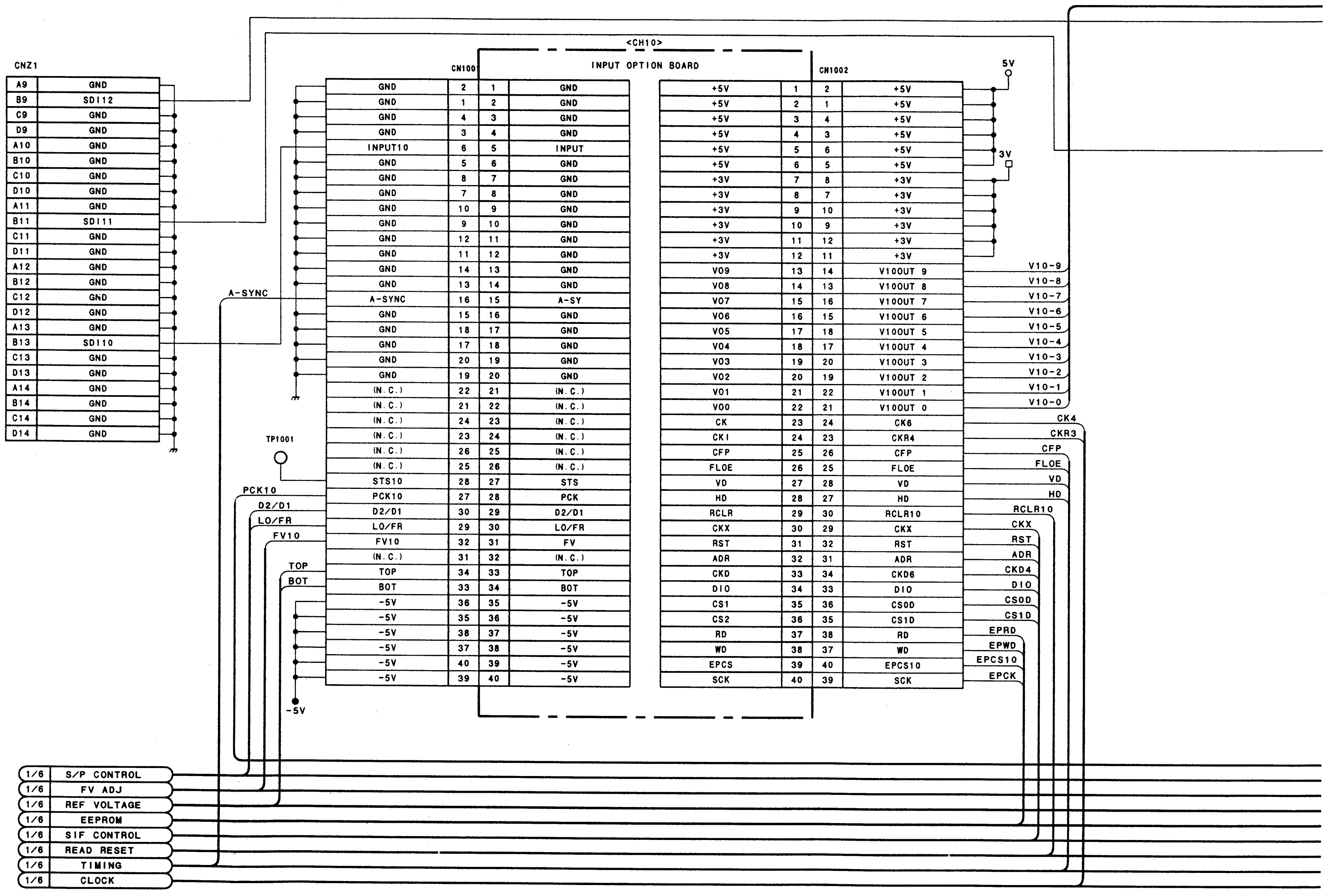

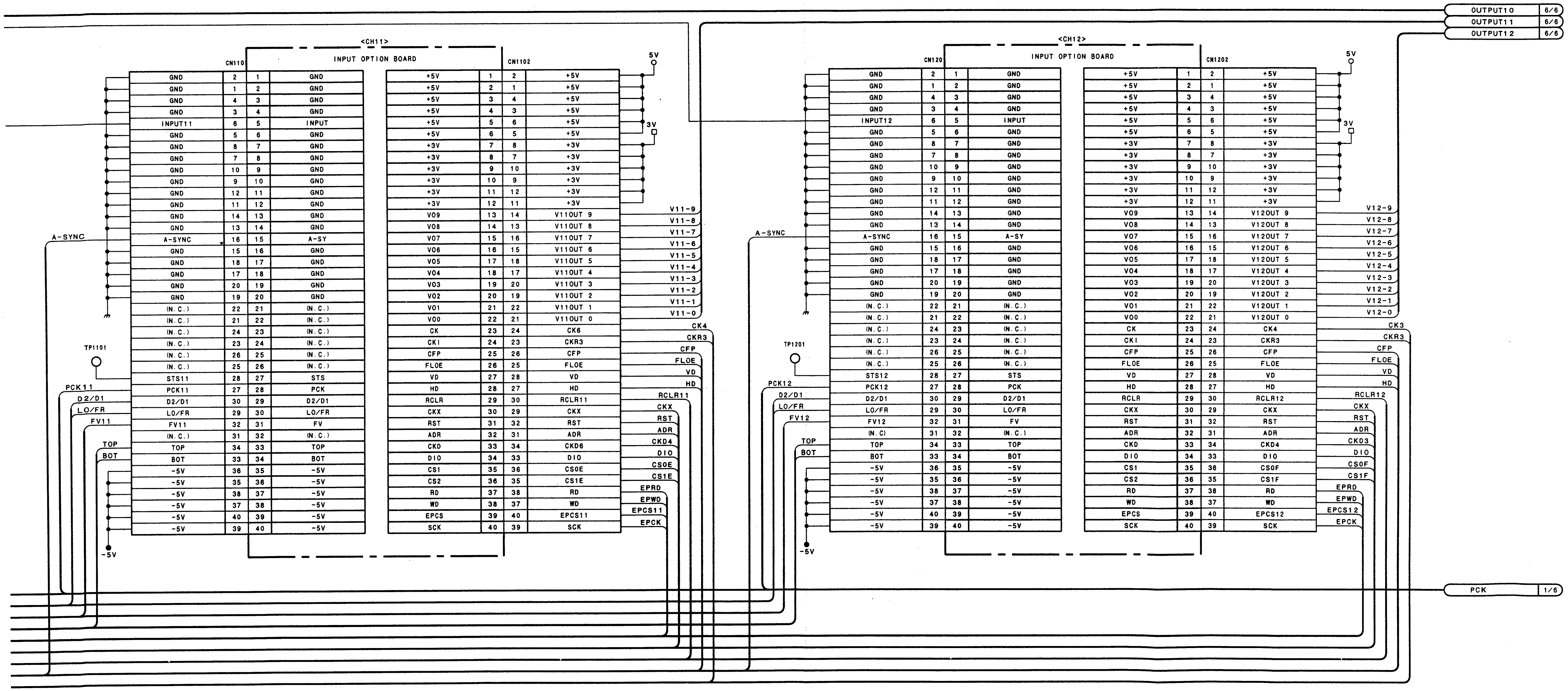

Blank Input Adaptor Board

ADC-21 (5/6)

BKDS-7110
BOARD NO. 1-658-409-11
LOT NO. 507-
FOR DVS-7000
B-¥SJX050-ADC20

BKDS-7110 (SY) : S/N 10001 and Higher

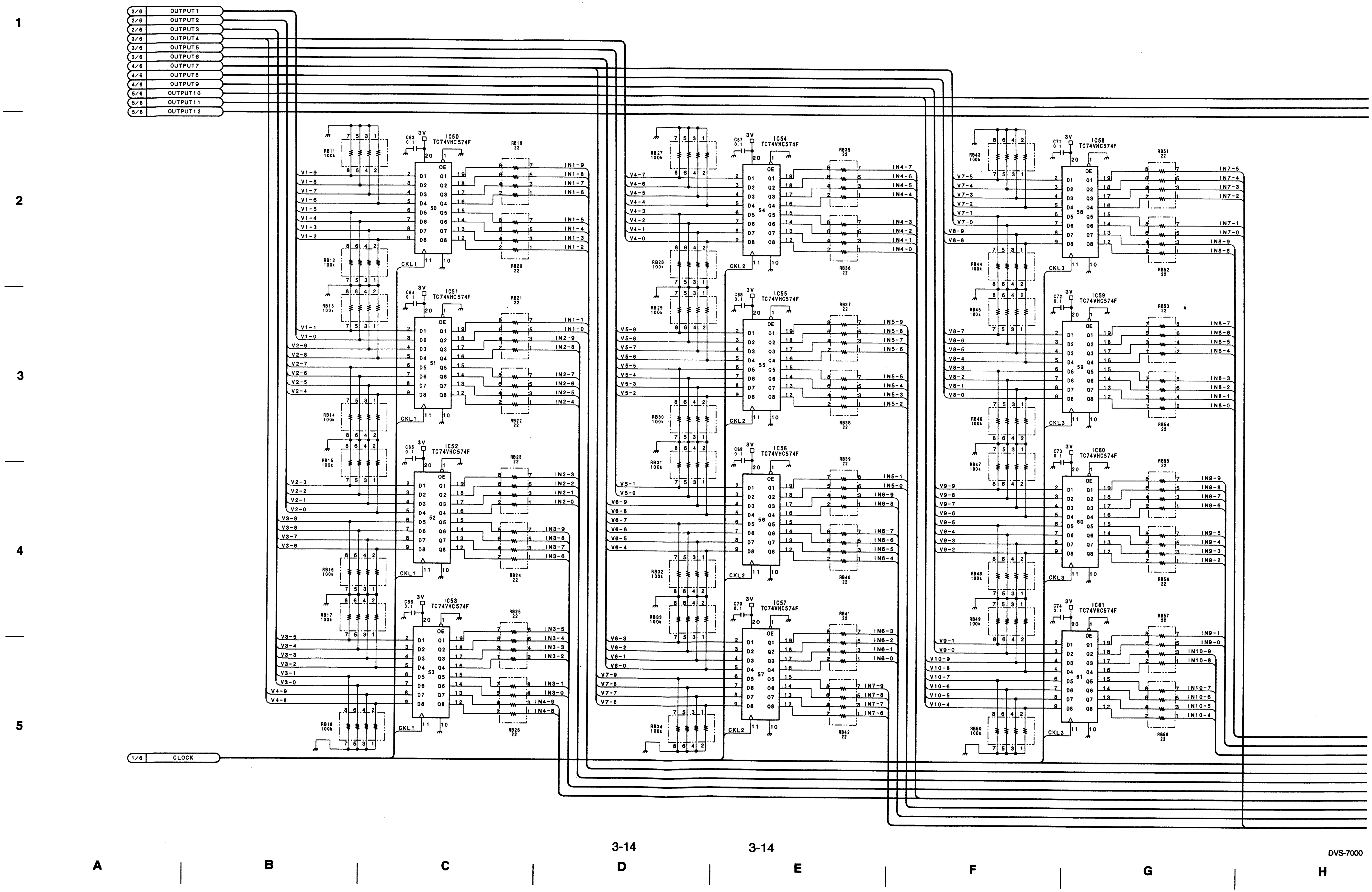

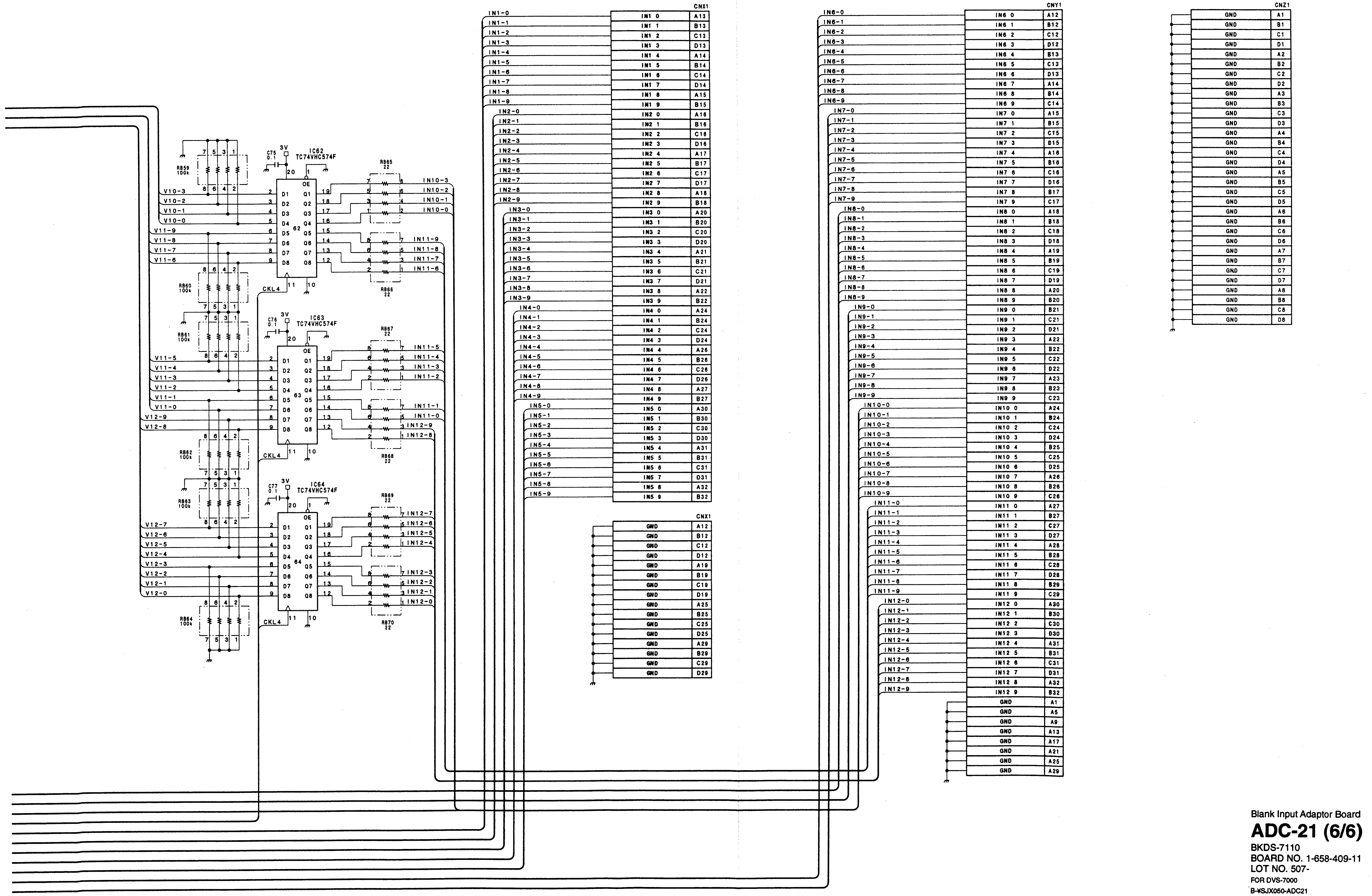

Blank Input Adaptor Board
ADC-21 (6/6)
BKDS-7110
BOARD NO. 1-658-409-11
LOT NO. 507-
FOR DVS-7000
B-¥SJX050-ADC21

This page is blank

BKDS-7133 (SY) : S/N 10001 and Higher

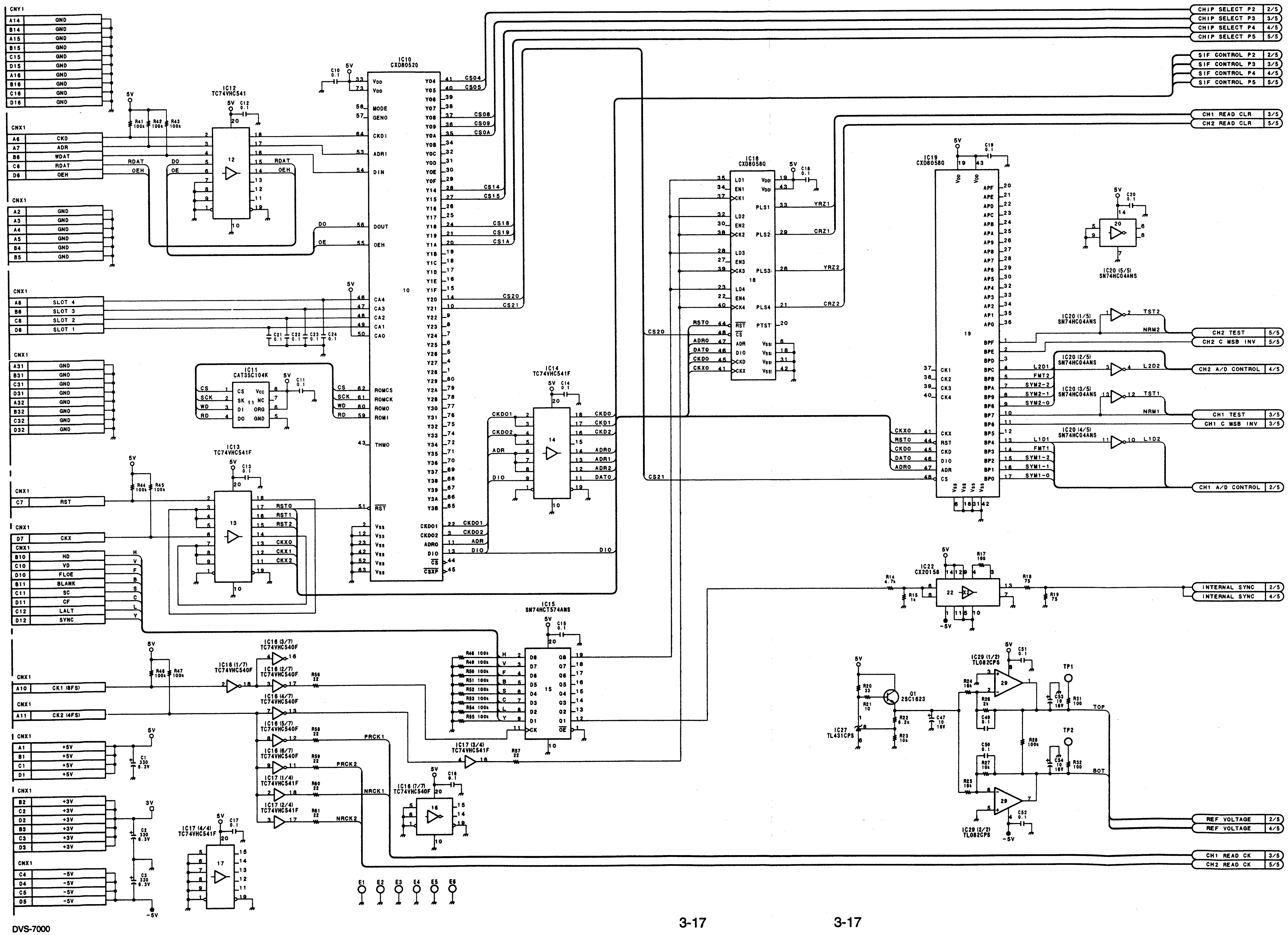

Chromakey Analog Component Input Board
ADC-22 (1/5)
BKDS-7133
BOARD NO. 1-658-419-11
LOT NO. 507-
FOR DVS-7000
B-¥SJX050-ADC22

A | B | C | D | E | F | G | H

BKDS-7133 (SY) : S/N 10001 and Higher

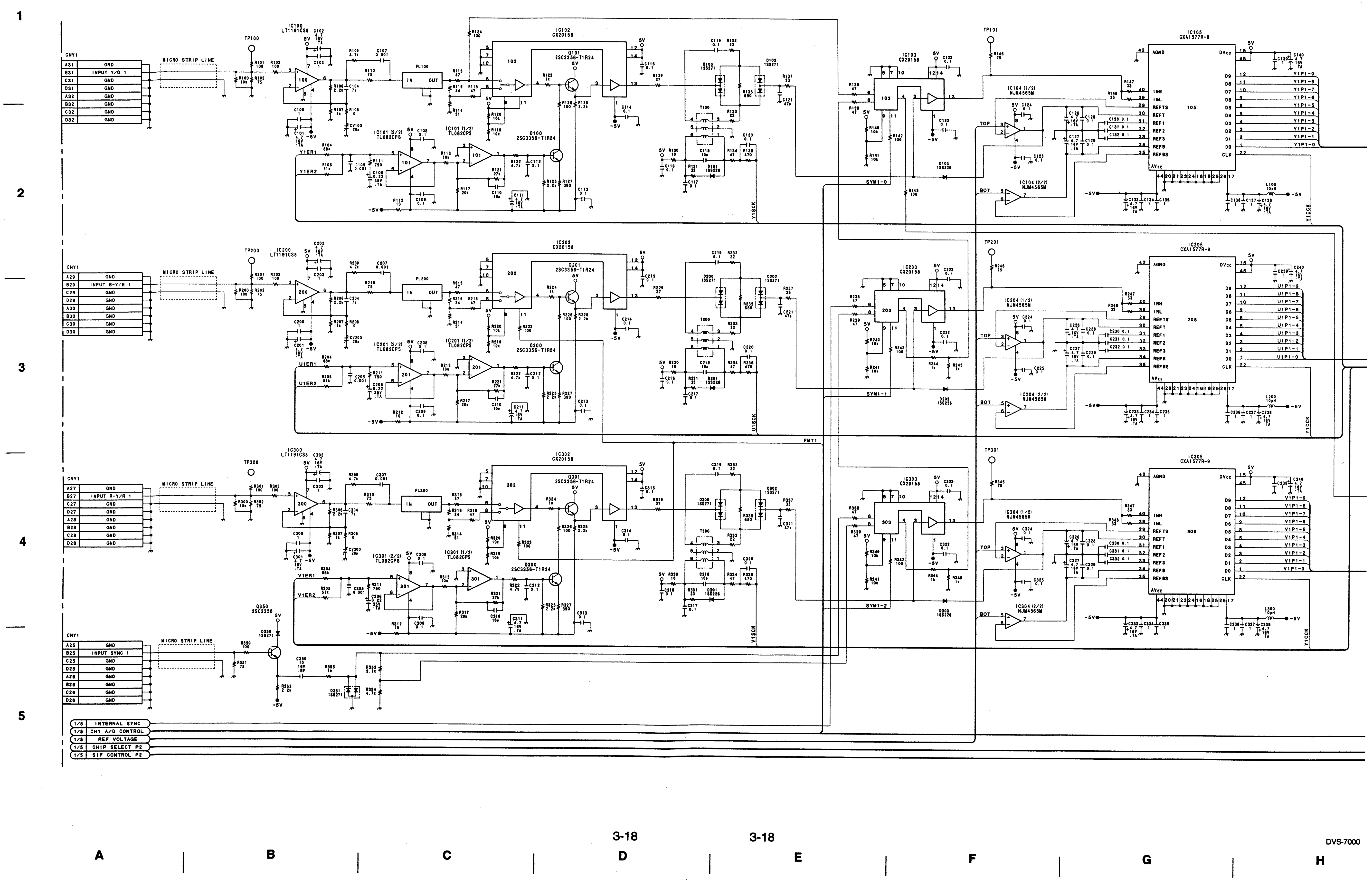

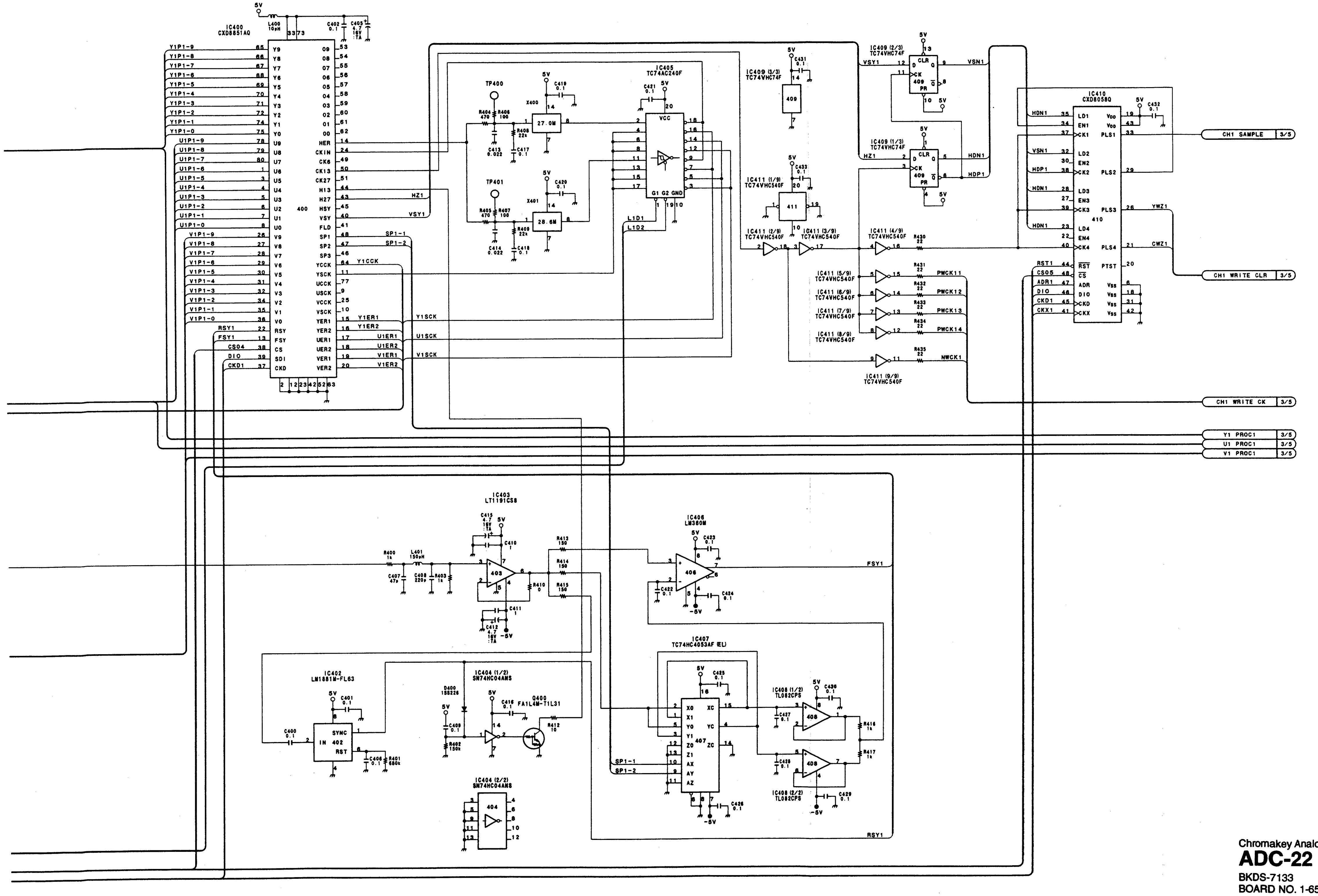

1
2
3
4
5

Chromakey Analog Component Input Board
ADC-22 (2/5)
BKDS-7133
BOARD NO. 1-658-419-11
LOT NO. 507-
FOR DVS-7000
B-VSJX050-ADC22

BKDS-7133 (SY) : S/N 10001 and Higher

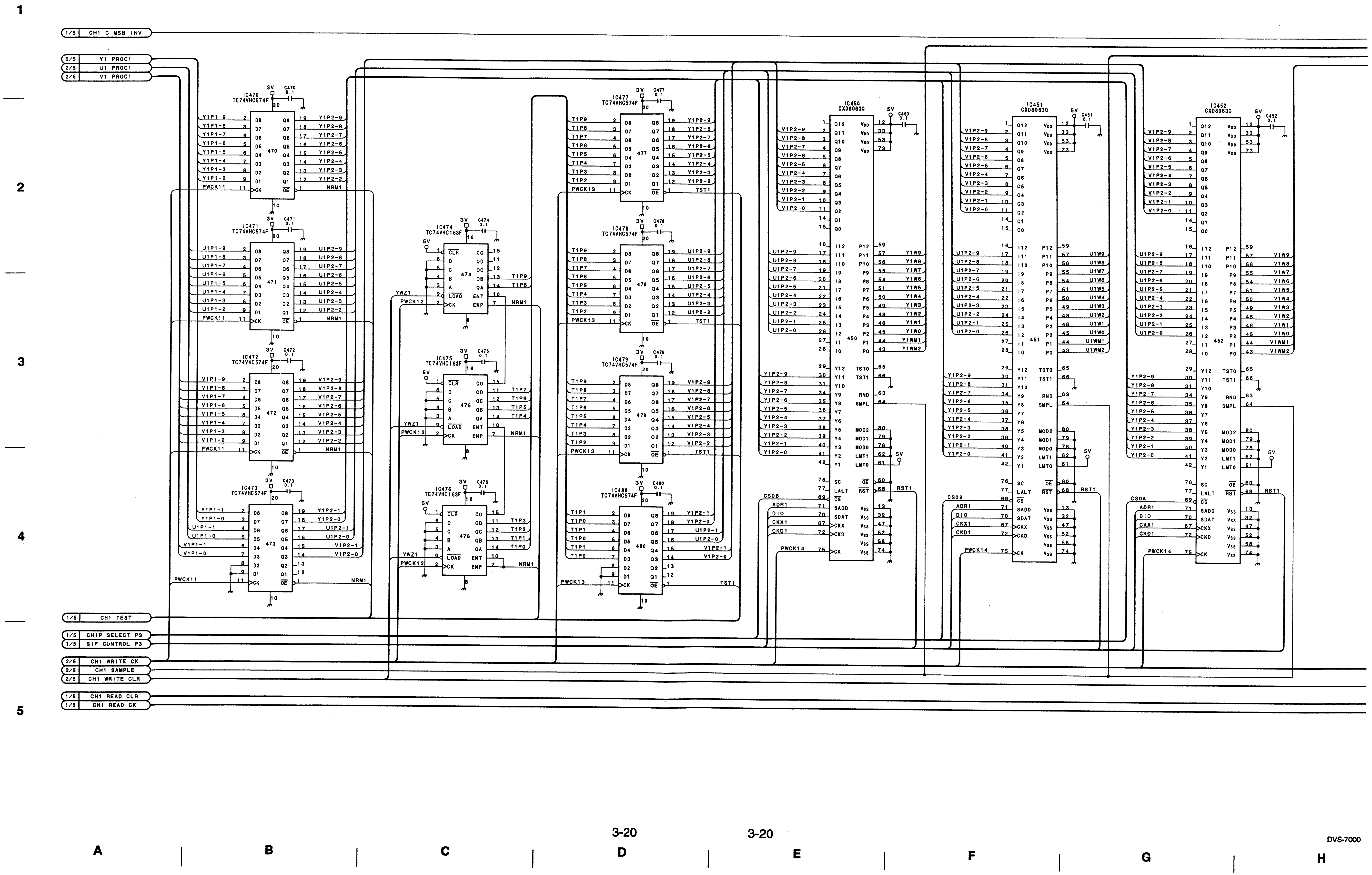

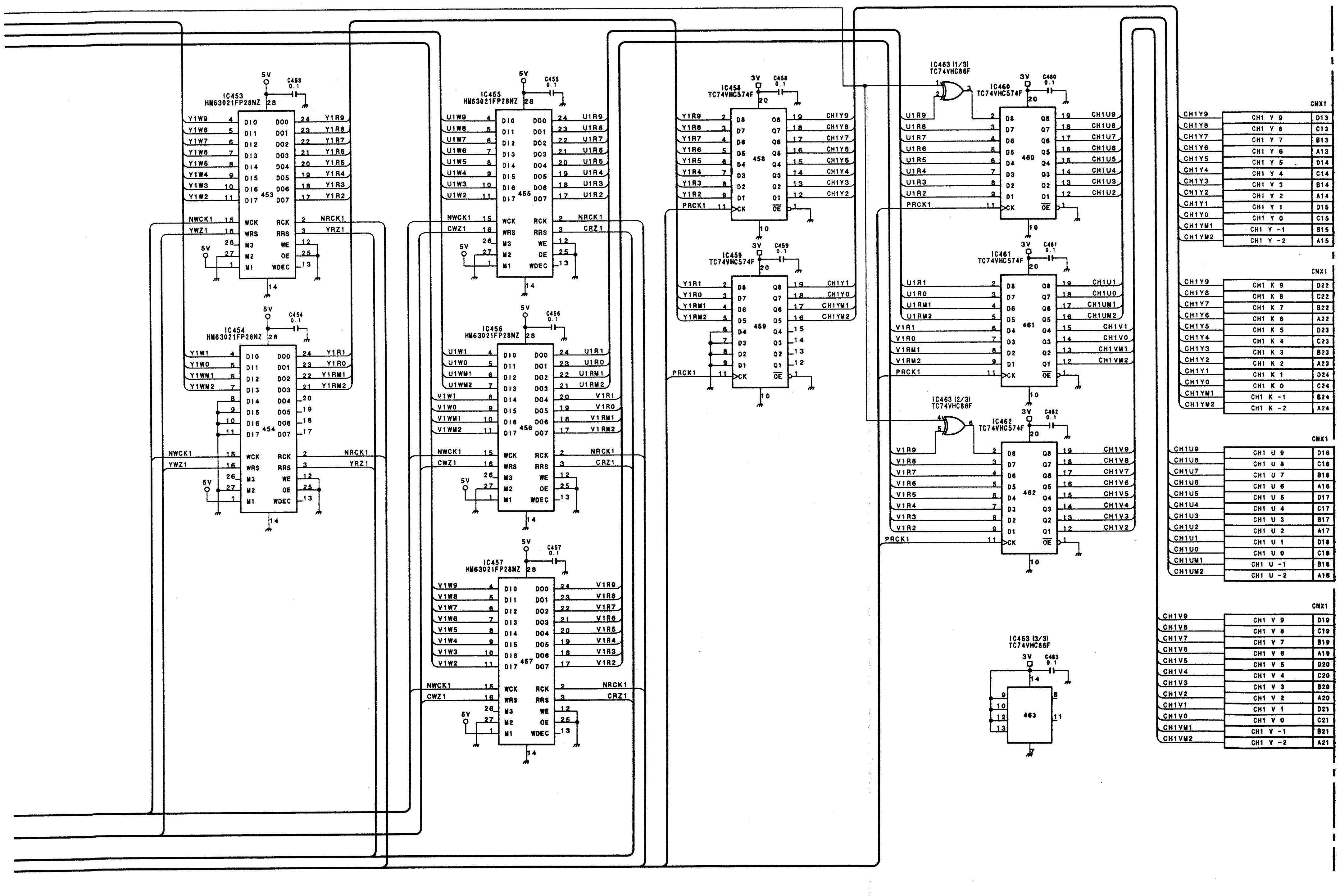

Chromakey Analog Component Input Board
ADC-22 (3/5)
BKDS-7133
BOARD NO. 1-658-419-11
LOT NO. 507-
FOR DVS-7000
B-¥SJX050-ADC22

I | J | K | L | M | N | O | P

ADC-22 (4/5) Chromakey Analog Component Input Board

BKDS-7133 (SY) : S/N 10001 and Higher

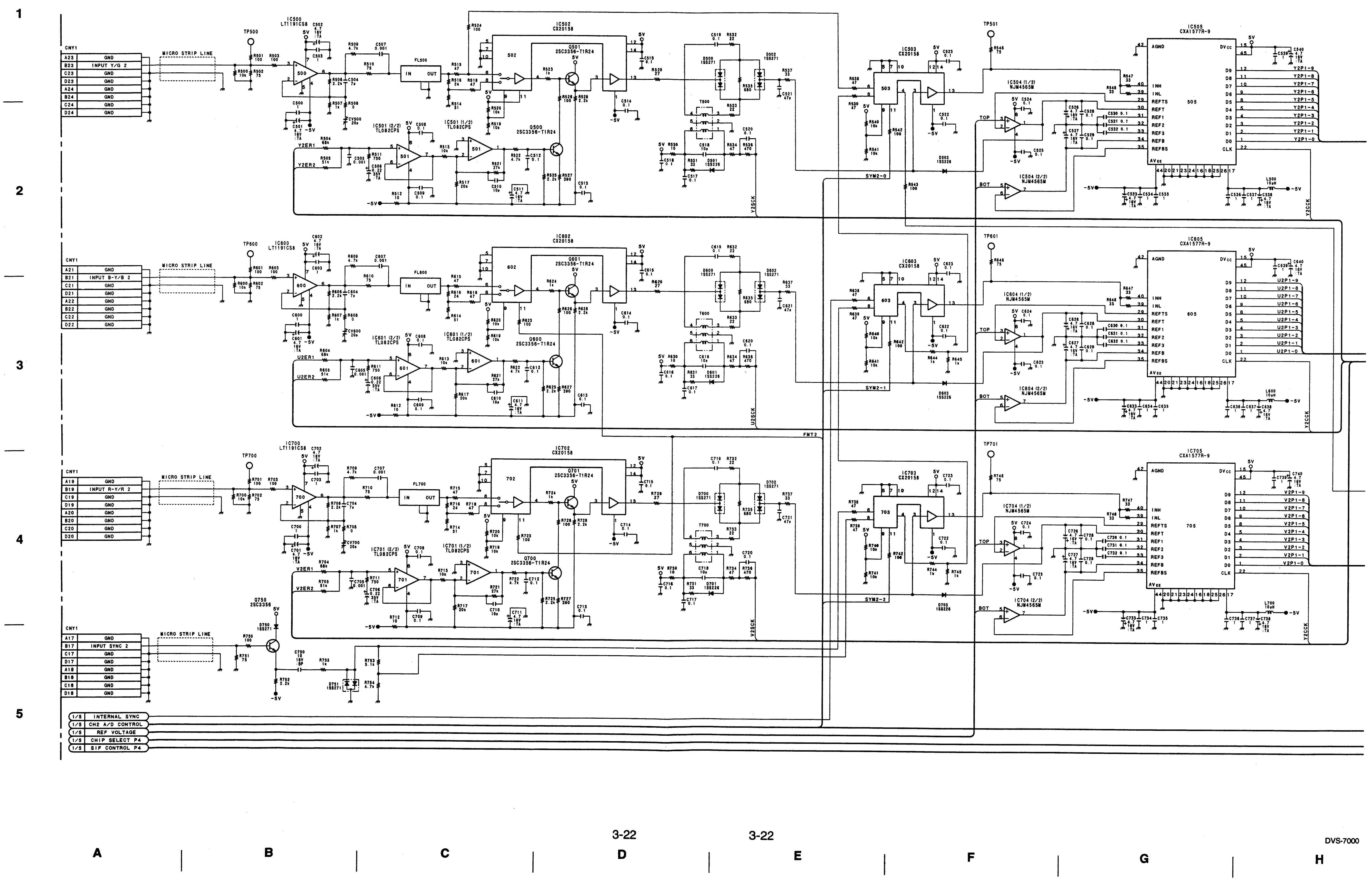

3-22

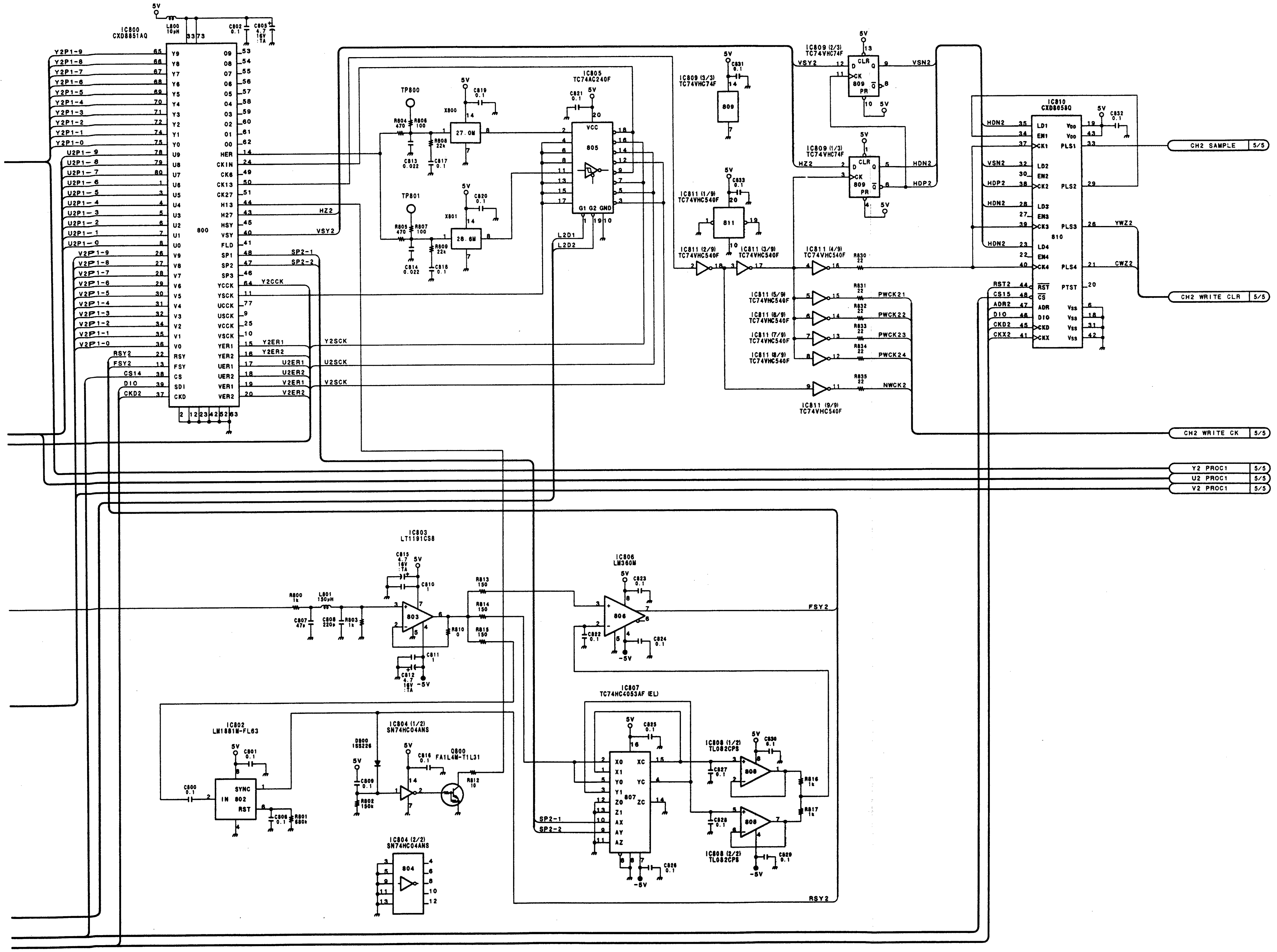

1
2
3
4
5

Chromakey Analog Component Input Board
ADC-22 (4/5)
BKDS-7133
BOARD NO. 1-658-419-11
LOT NO. 507-
FOR DVS-7000
B-¥SJX050-ADC22

I J K L M N O P

BKDS-7133 (SY) : S/N 10001 and Higher

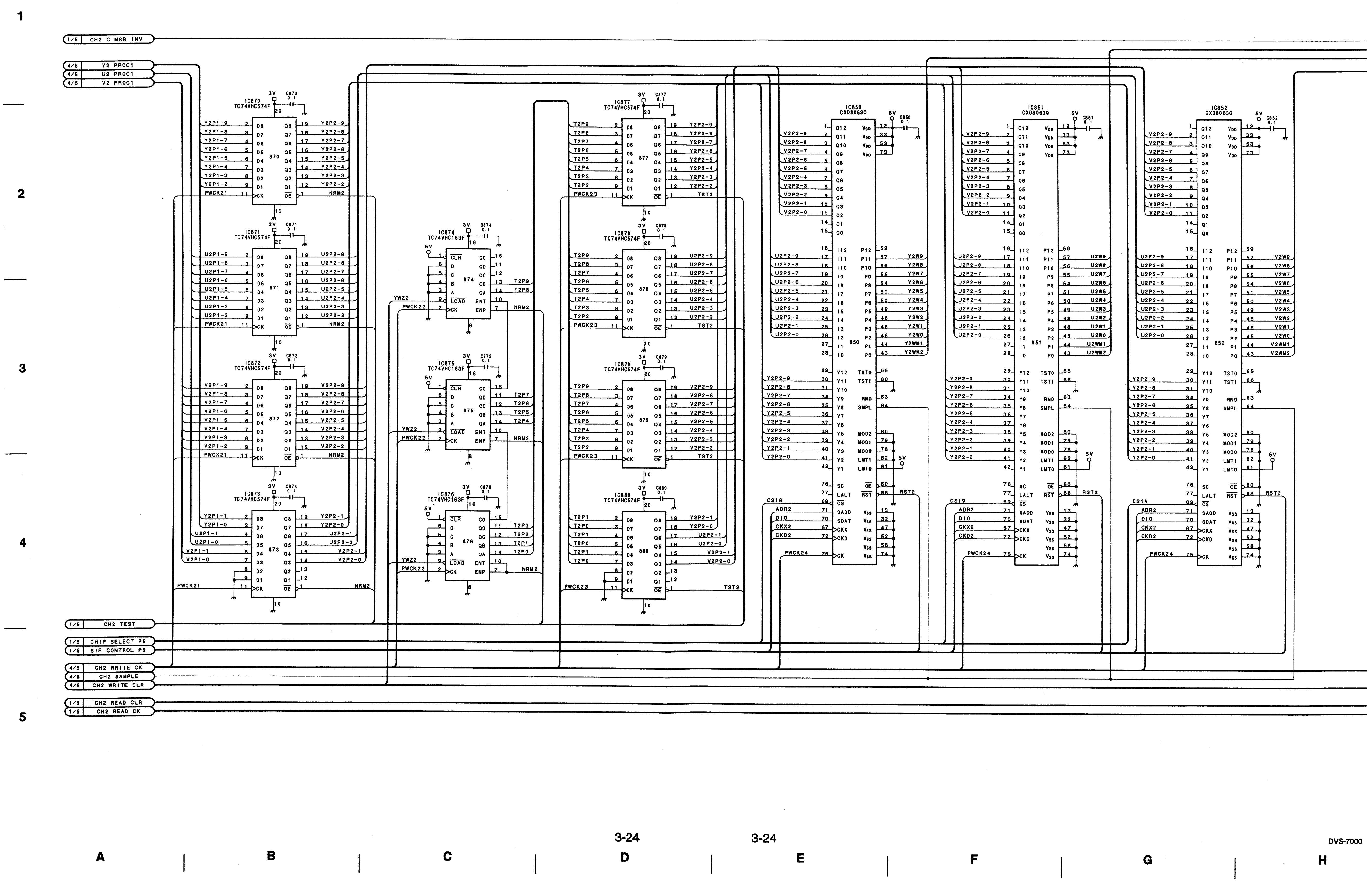

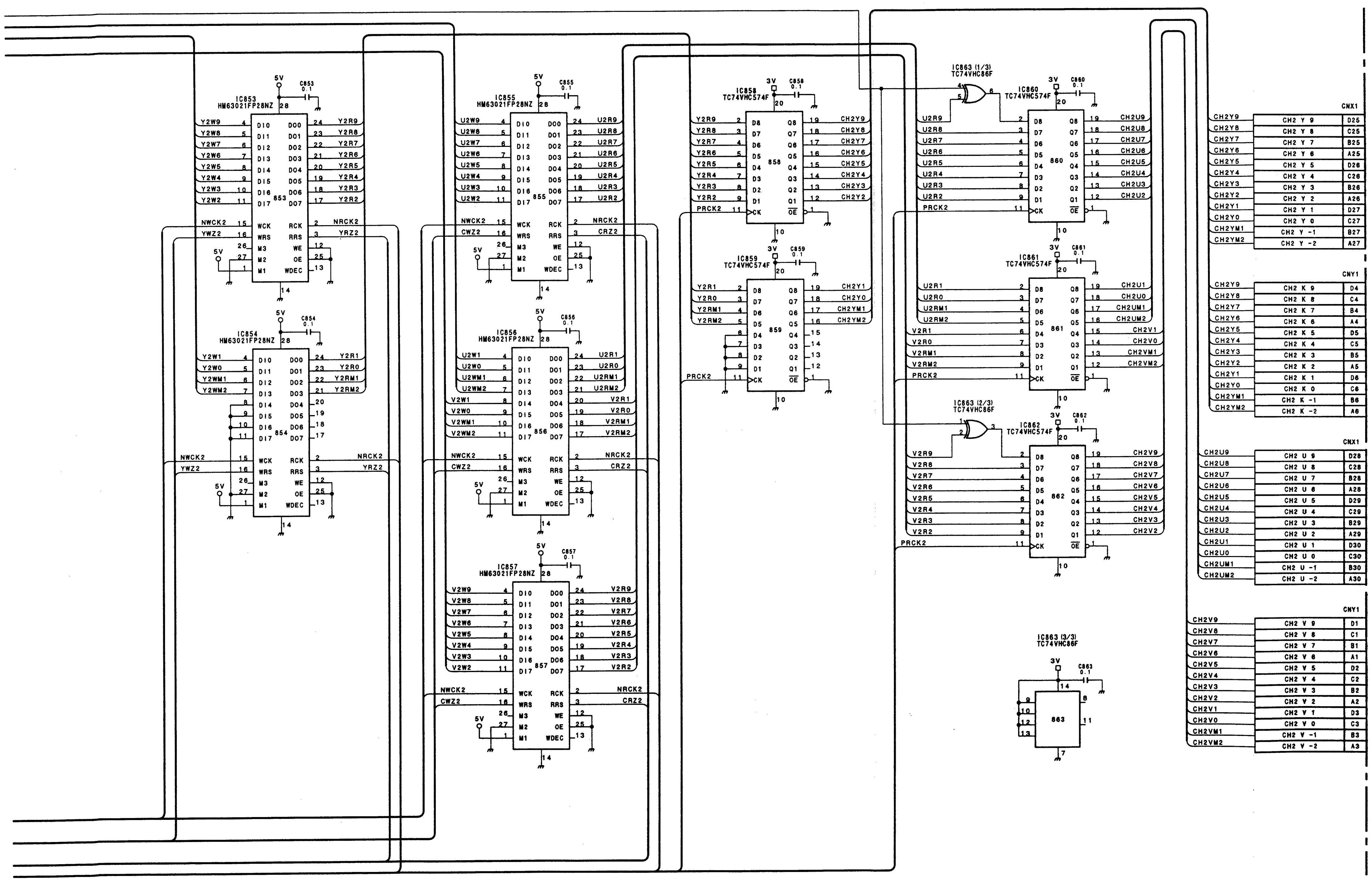

Chromakey Analog Component Input Board
ADC-22 (5/5)
BKDS-7133
BOARD NO. 1-658-419-11
LOT NO. 507-
FOR DVS-7000
B-¥SJX050-ADC22

BKDS-7111 (SY) : S/N 10001 and Higher

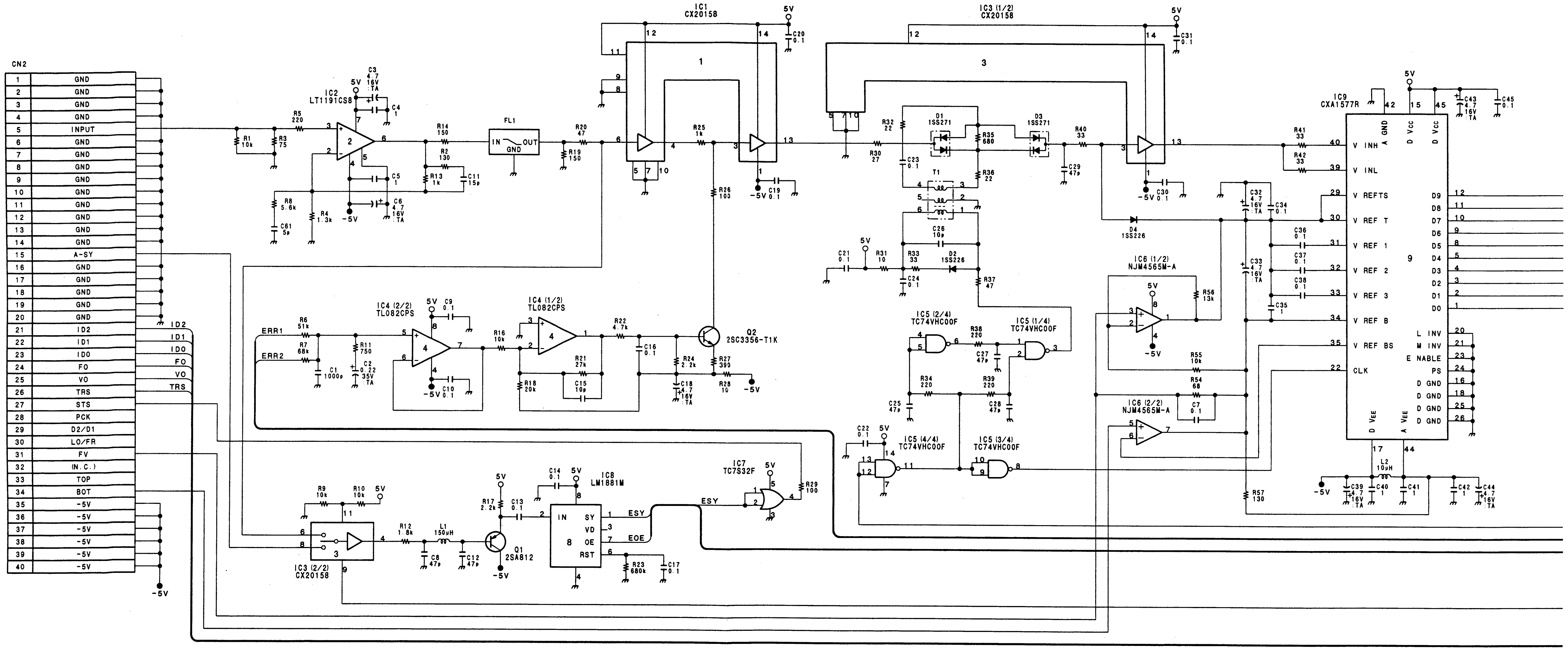

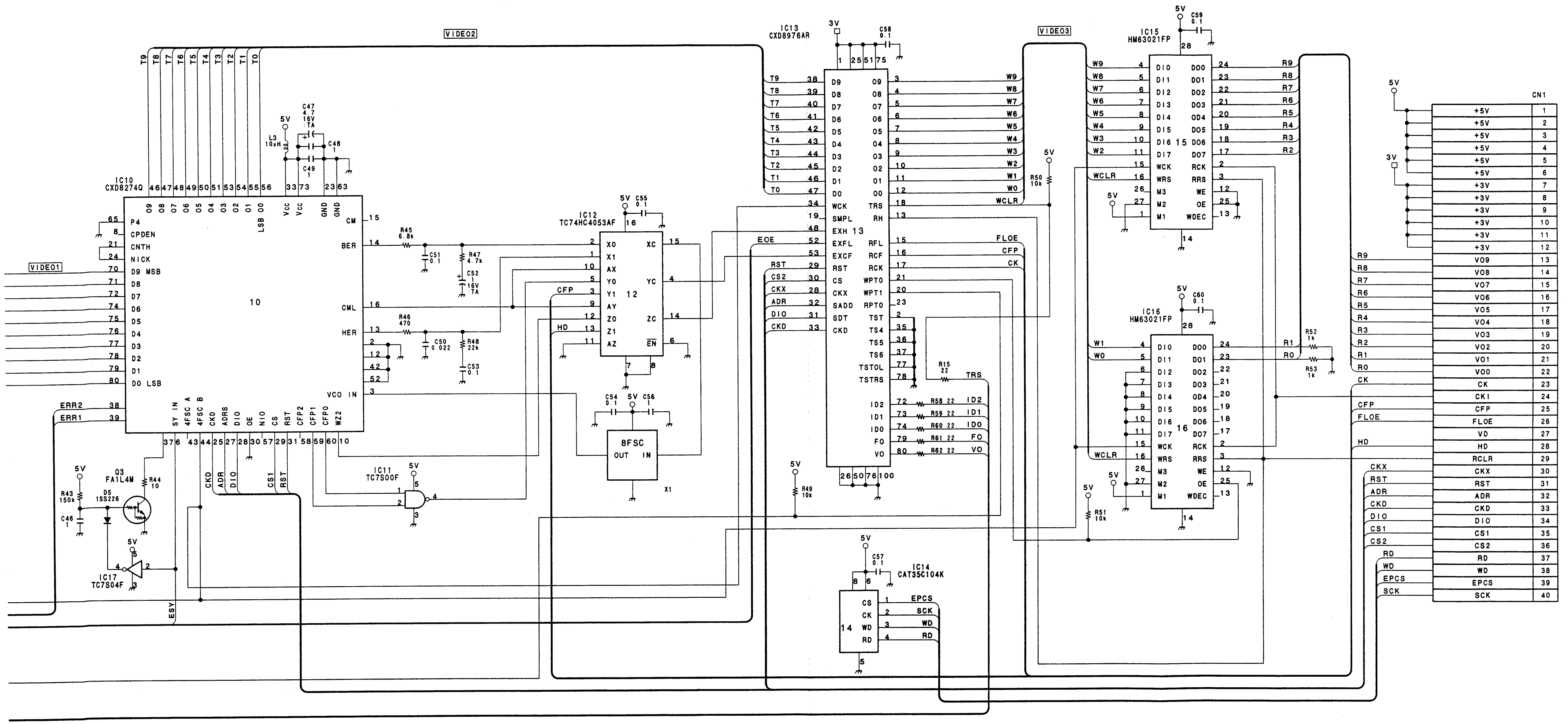

1
2
3
4
5

Analog Composite Input Board
ADI-3
BKDS-7111
BOARD NO. 1-658-411-11
LOT NO. 506-
FOR DVS-7000/DMK-7000
B-¥SJX050-ADI3

BKDS-M1810 (SY) : S/N 10101 and Higher
BKDS-M1820 (SY) : S/N 10021 and Higher

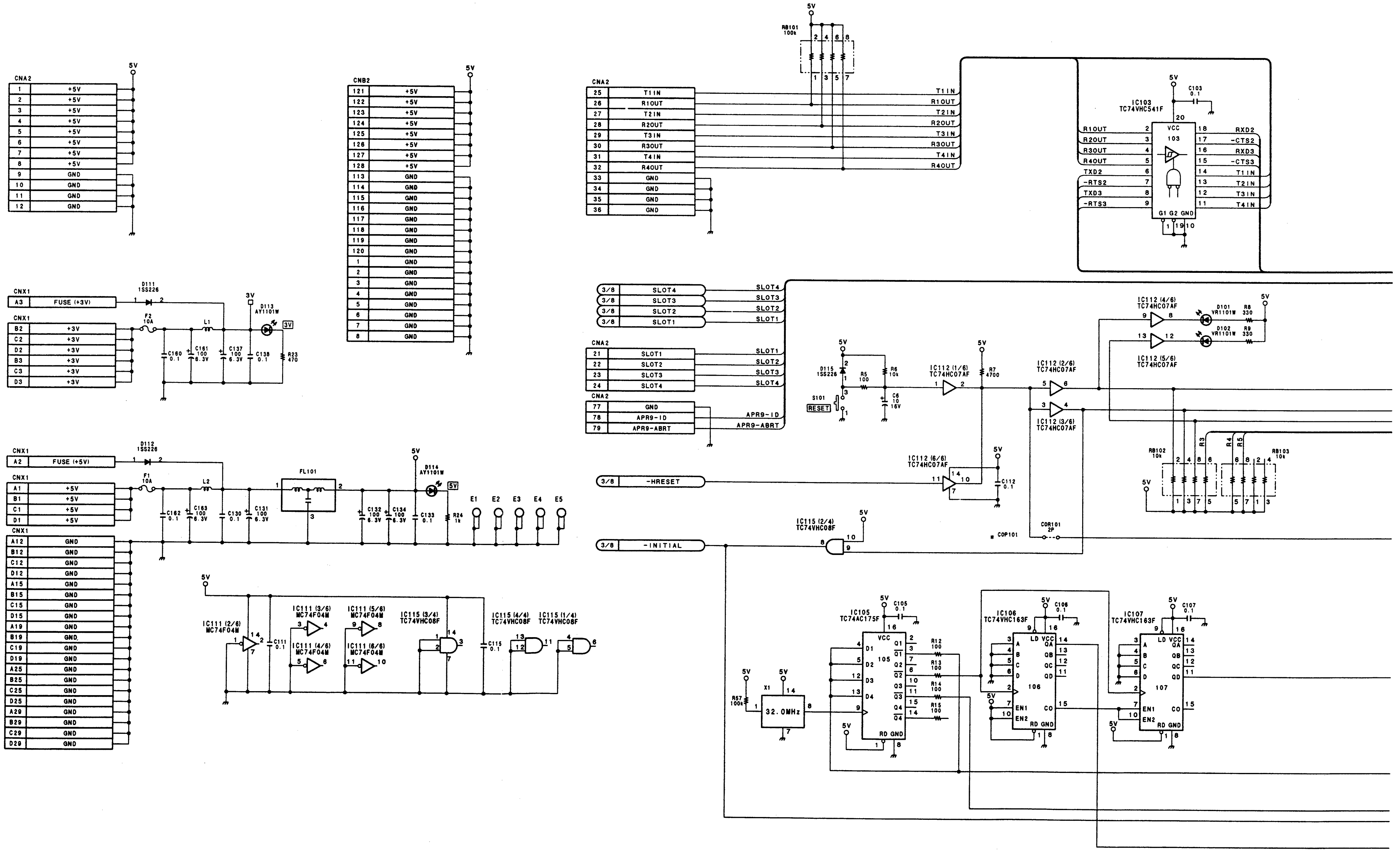

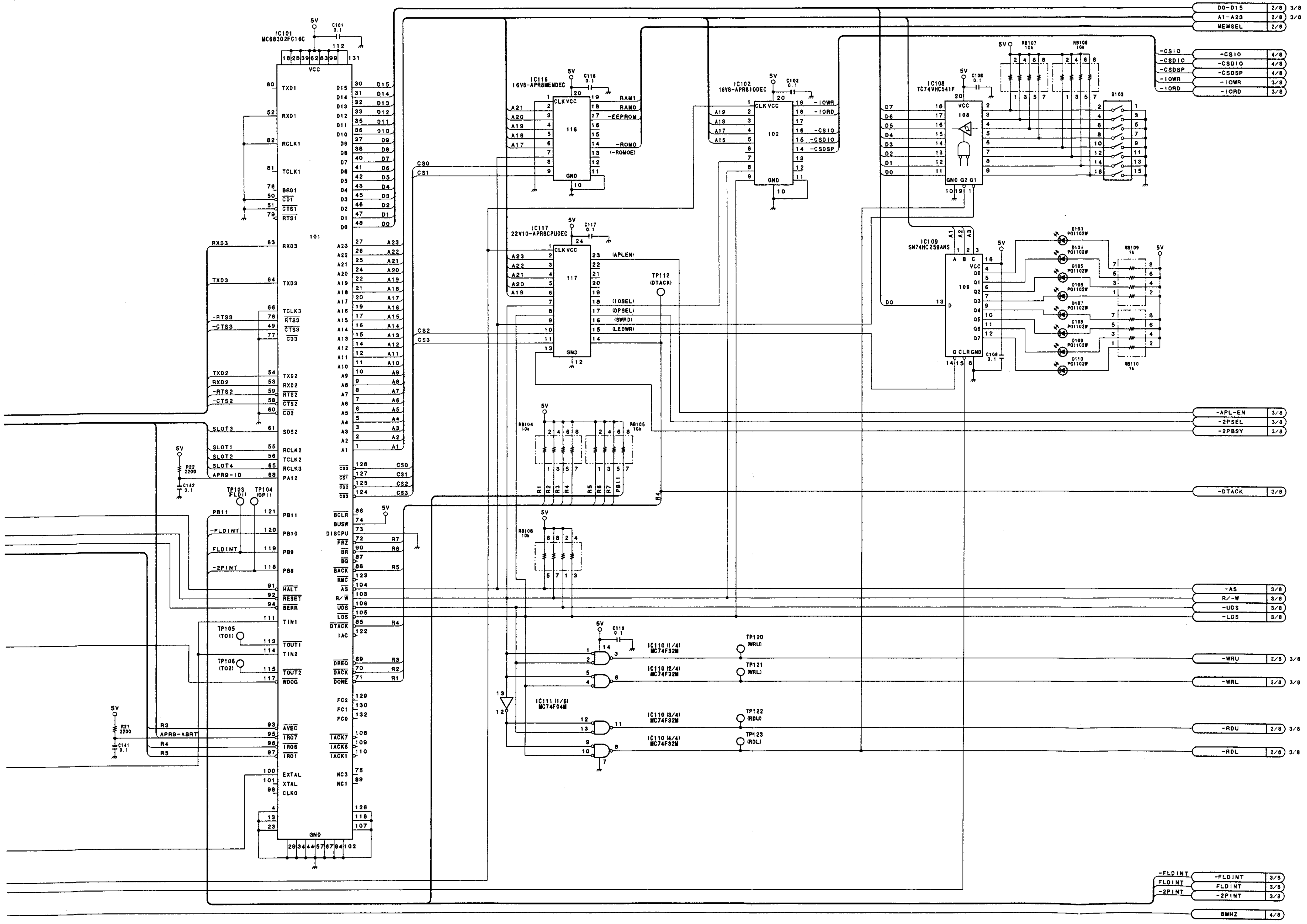

Audio Process Board
APR-8 (1/8)
BKDS-M1810/M1820
BOARD NO. 1-658-385-12
BKDS-M1810 : LOT NO. 601-
BKDS-M1820 : LOT NO. 601-
FOR DVS-M1000C
B-¥SJX053-APR8-12

1 2 3 4 5

I J K L M N O P

This page is blank

BKDS-M1810 (SY) : S/N 10101 and Higher
BKDS-M1820 (SY) : S/N 10021 and Higher

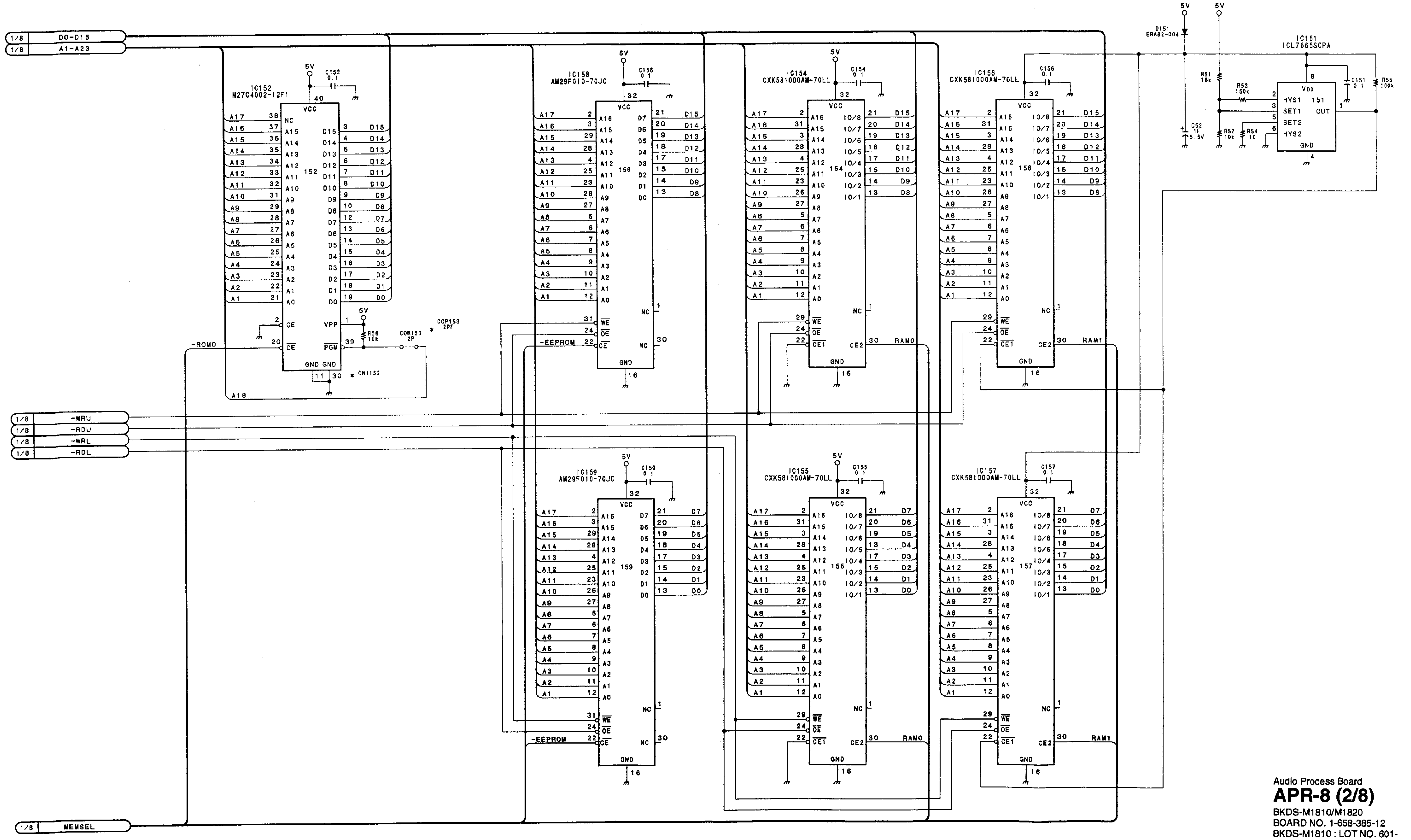

Audio Process Board
APR-8 (2/8)
BKDS-M1810/M1820
BOARD NO. 1-658-385-12
BKDS-M1810 : LOT NO. 601-
BKDS-M1820 : LOT NO. 601-
FOR DVS-M1000C
B-¥SJX053-APR8-12

BKDS-M1810 (SY) : S/N 10101 and Higher
BKDS-M1820 (SY) : S/N 10021 and Higher

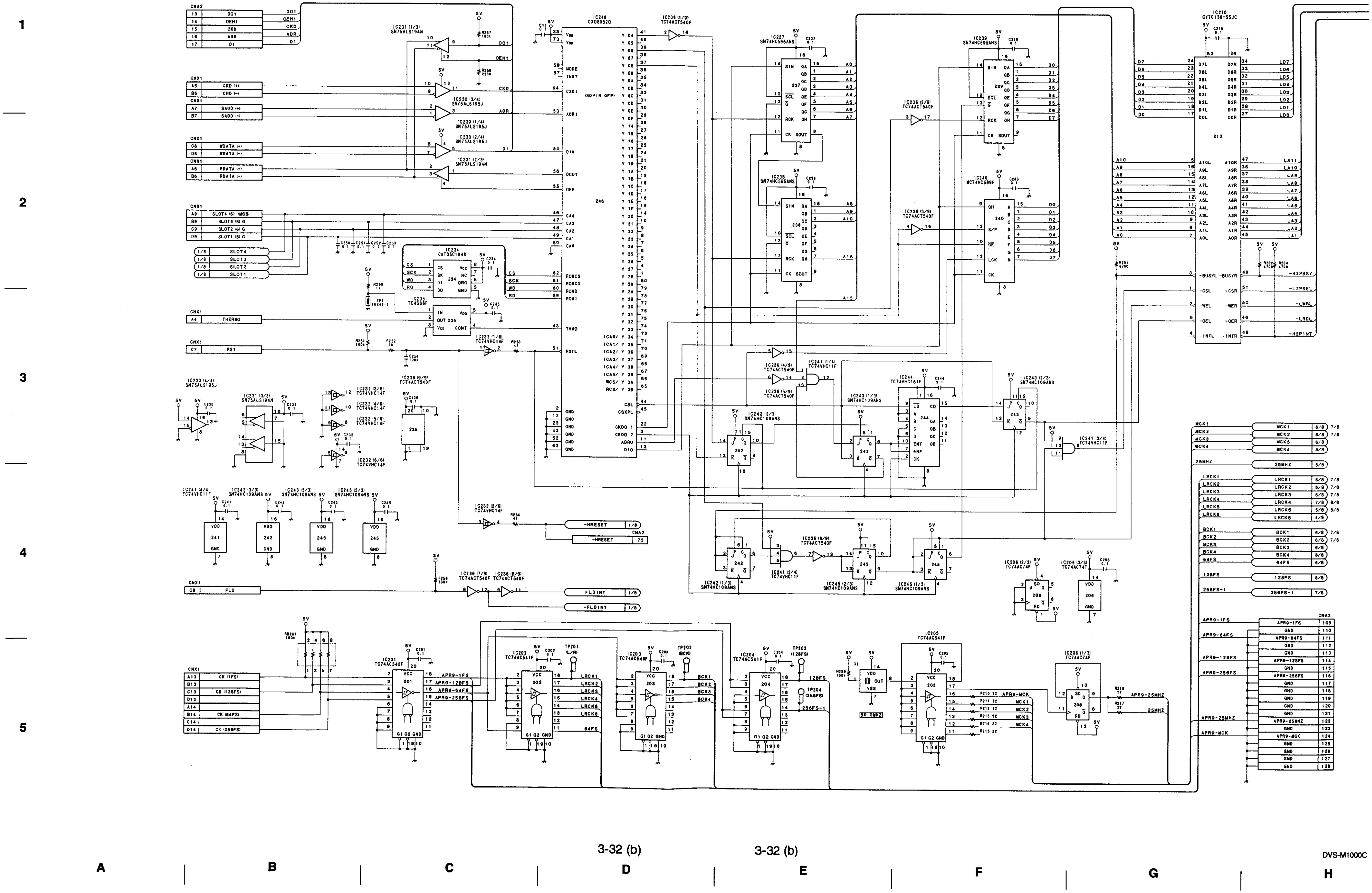

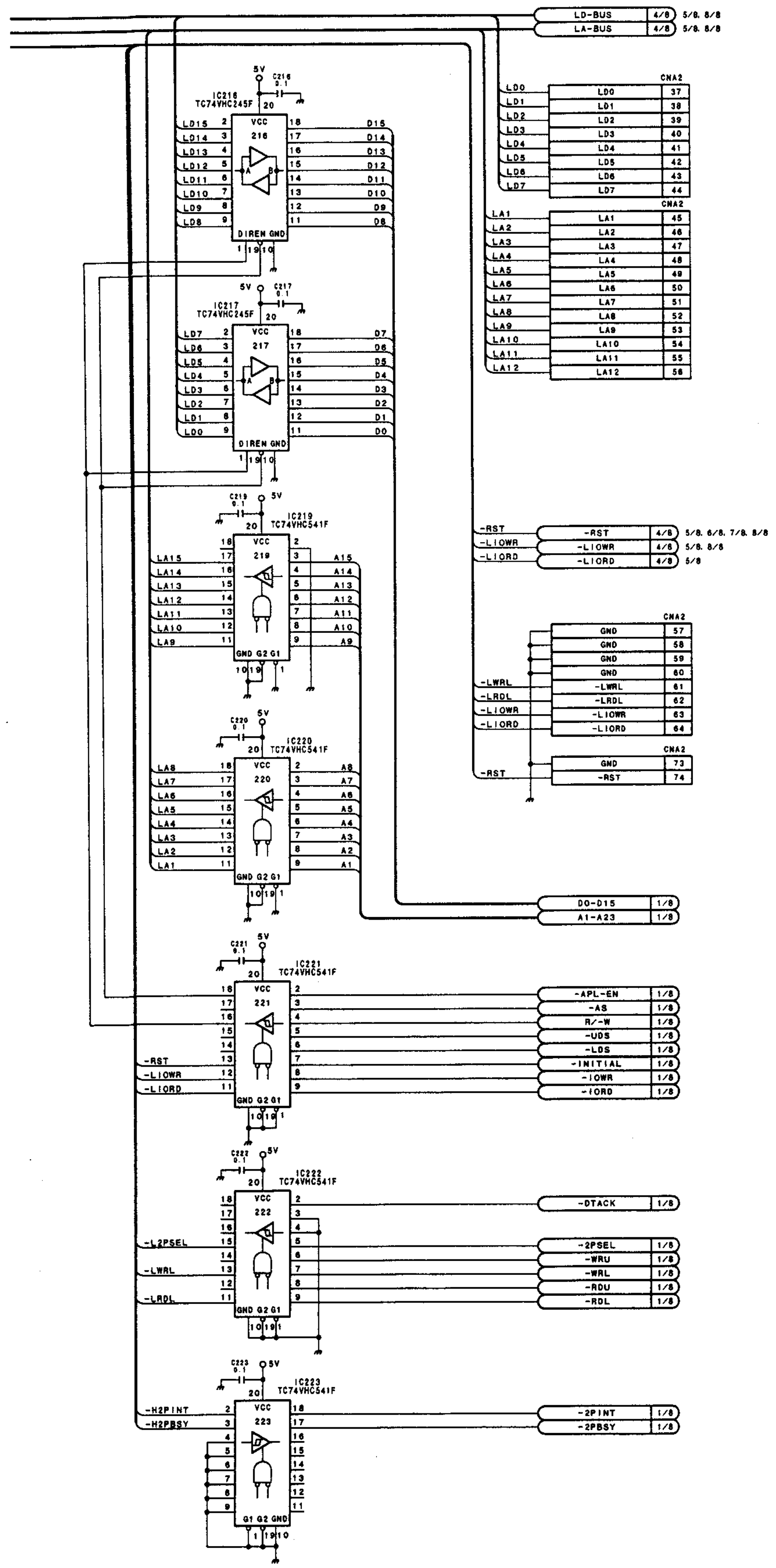

Audio Process Board
APR-8 (3/8)
BKDS-M1810/M1820
BOARD NO. 1-658-385-12
BKDS-M1810 : LOT NO. 601-
BKDS-M1820 : LOT NO. 601-
FOR DVS-M1000C
B-¥SJX053-APR8-12

BKDS-M1810 (SY) : S/N 10101 and Higher
BKDS-M1820 (SY) : S/N 10021 and Higher

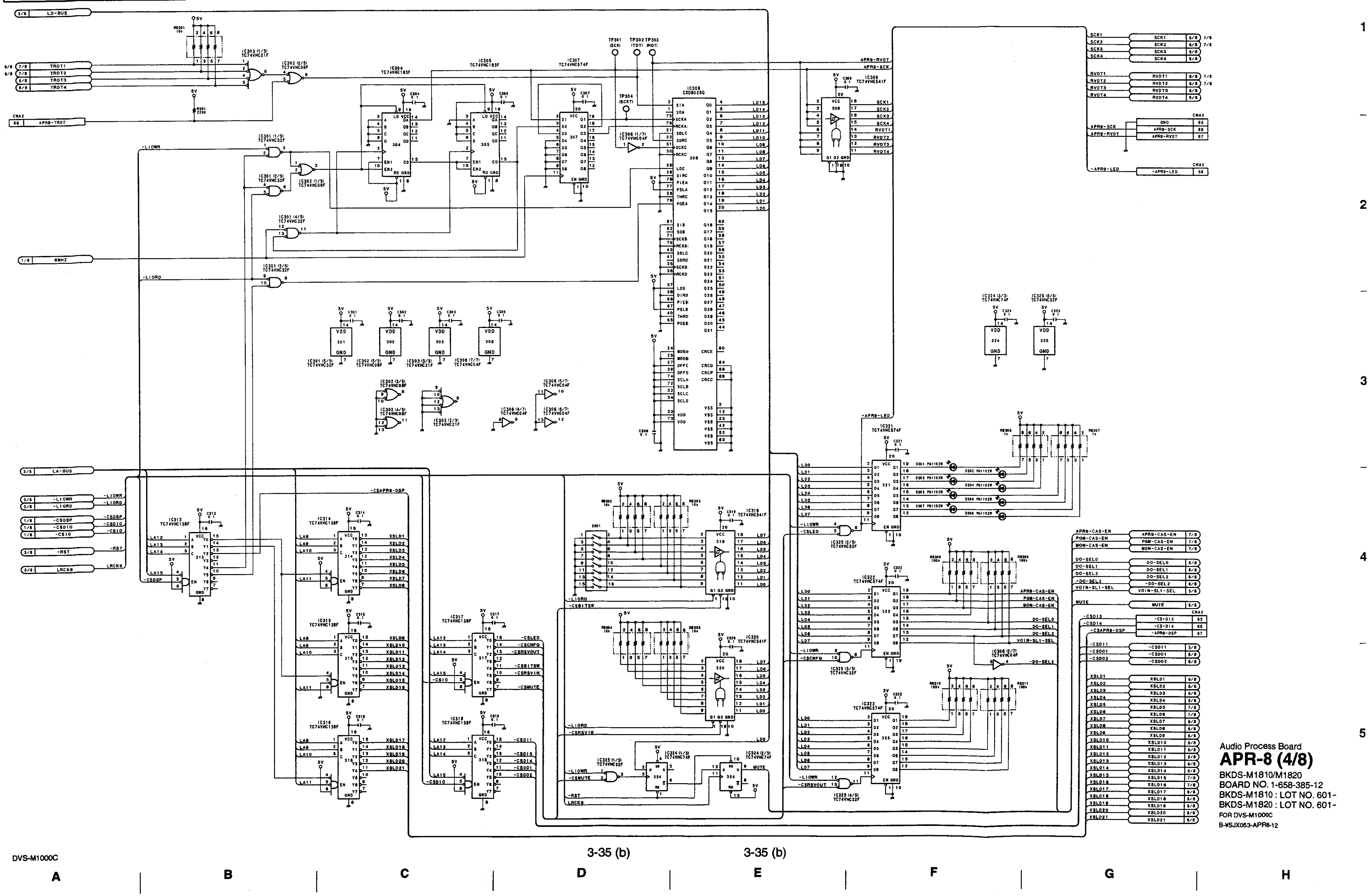

Audio Process Board
APR-8 (4/8)
BKDS-M1810/M1820
BOARD NO. 1-658-385-12
BKDS-M1810 : LOT NO. 601-
BKDS-M1820 : LOT NO. 601-
FOR DVS-M1000C
B-¥SJX053-APR8-12

BKDS-M1810 (SY) : S/N 10101 and Higher
BKDS-M1820 (SY) : S/N 10021 and Higher

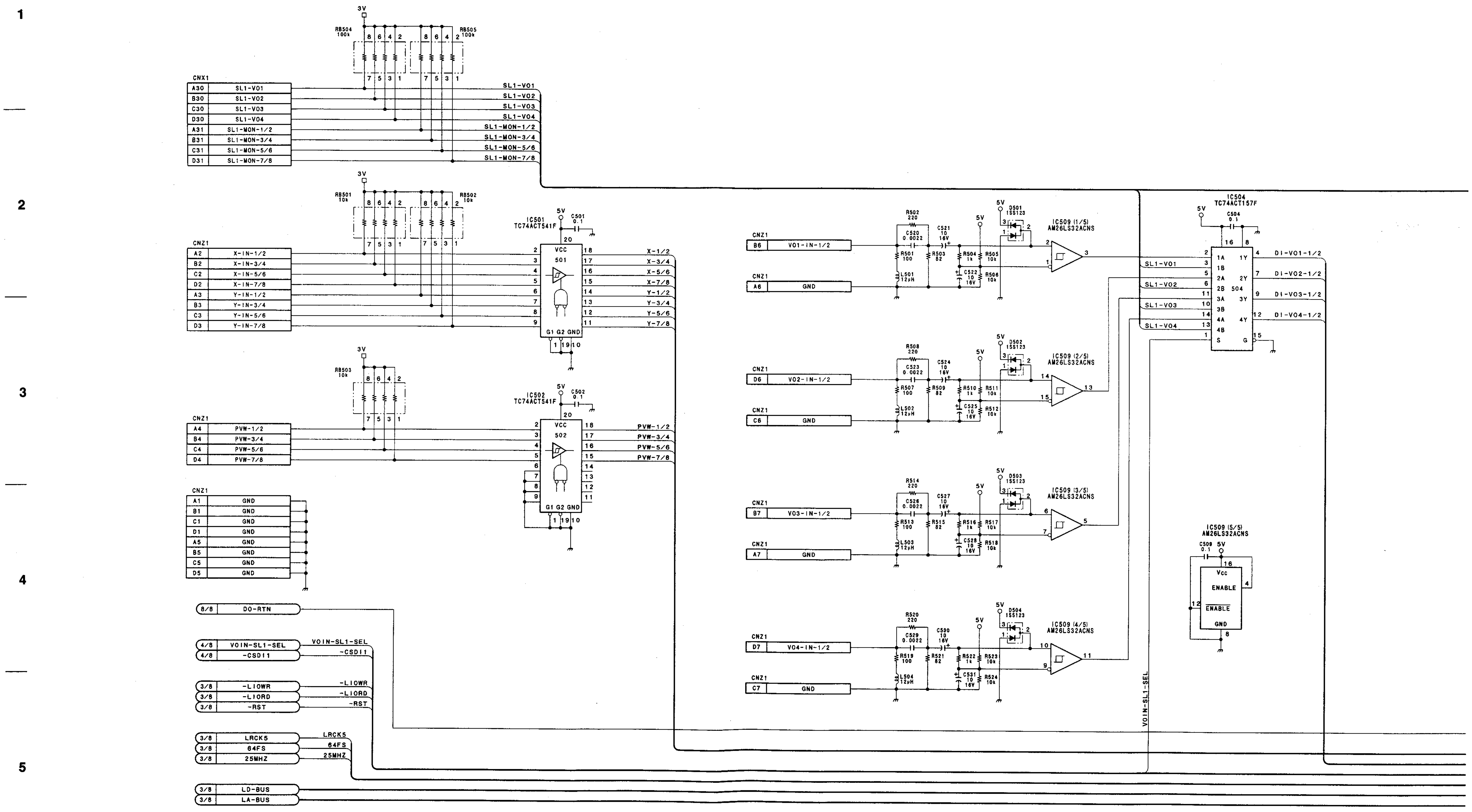

A | B | C | D | E | F | G | H

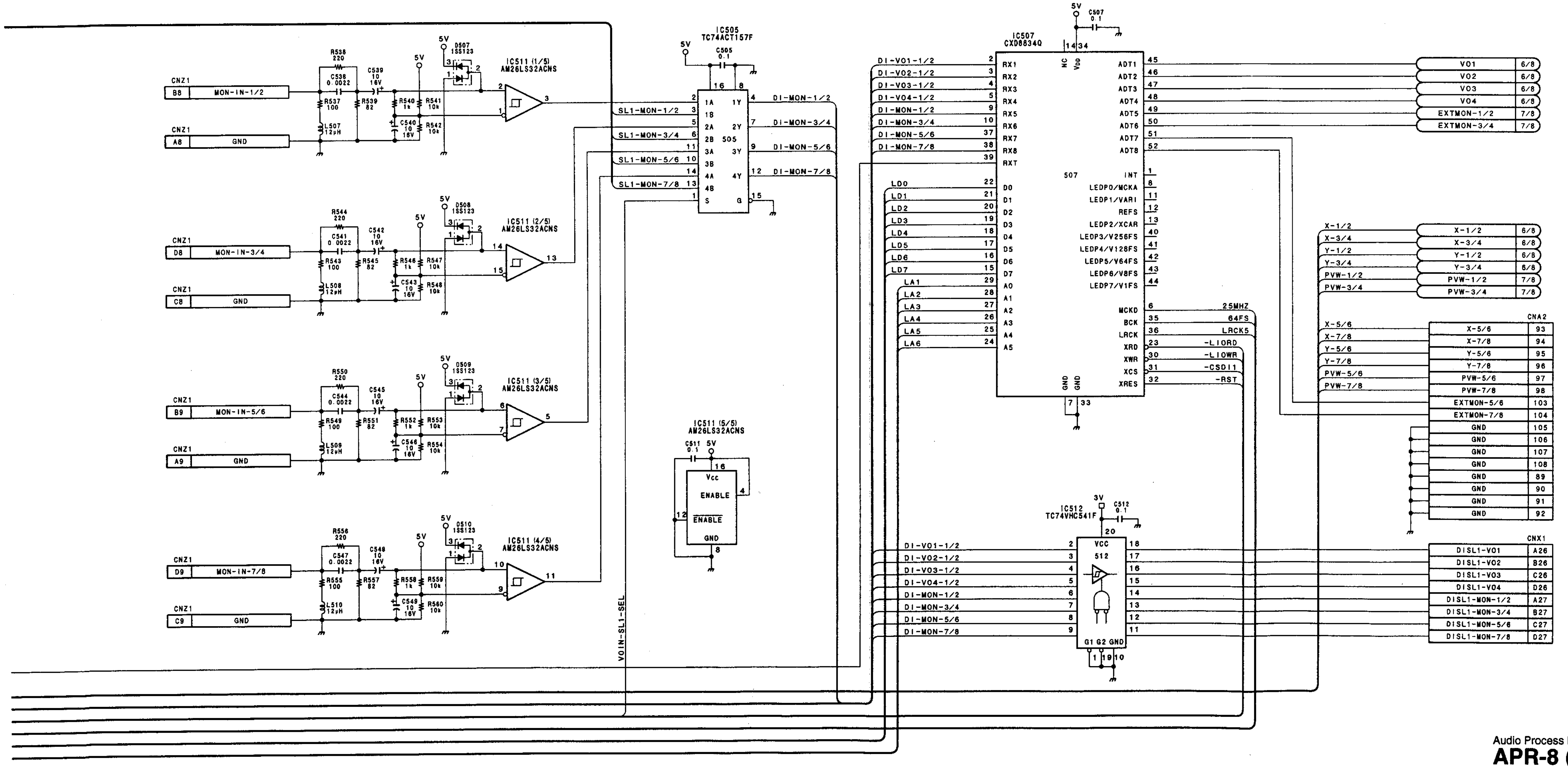

Audio Process Board
APR-8 (5/8)
BKDS-M1810/M1820
BOARD NO. 1-658-385-12
BKDS-M1810 : LOT NO. 601-
BKDS-M1820 : LOT NO. 601-
FOR DVS-M1000C
B-¥SJX053-APR8-12

BKDS-M1810 (SY) : S/N 10101 and Higher
BKDS-M1820 (SY) : S/N 10021 and Higher

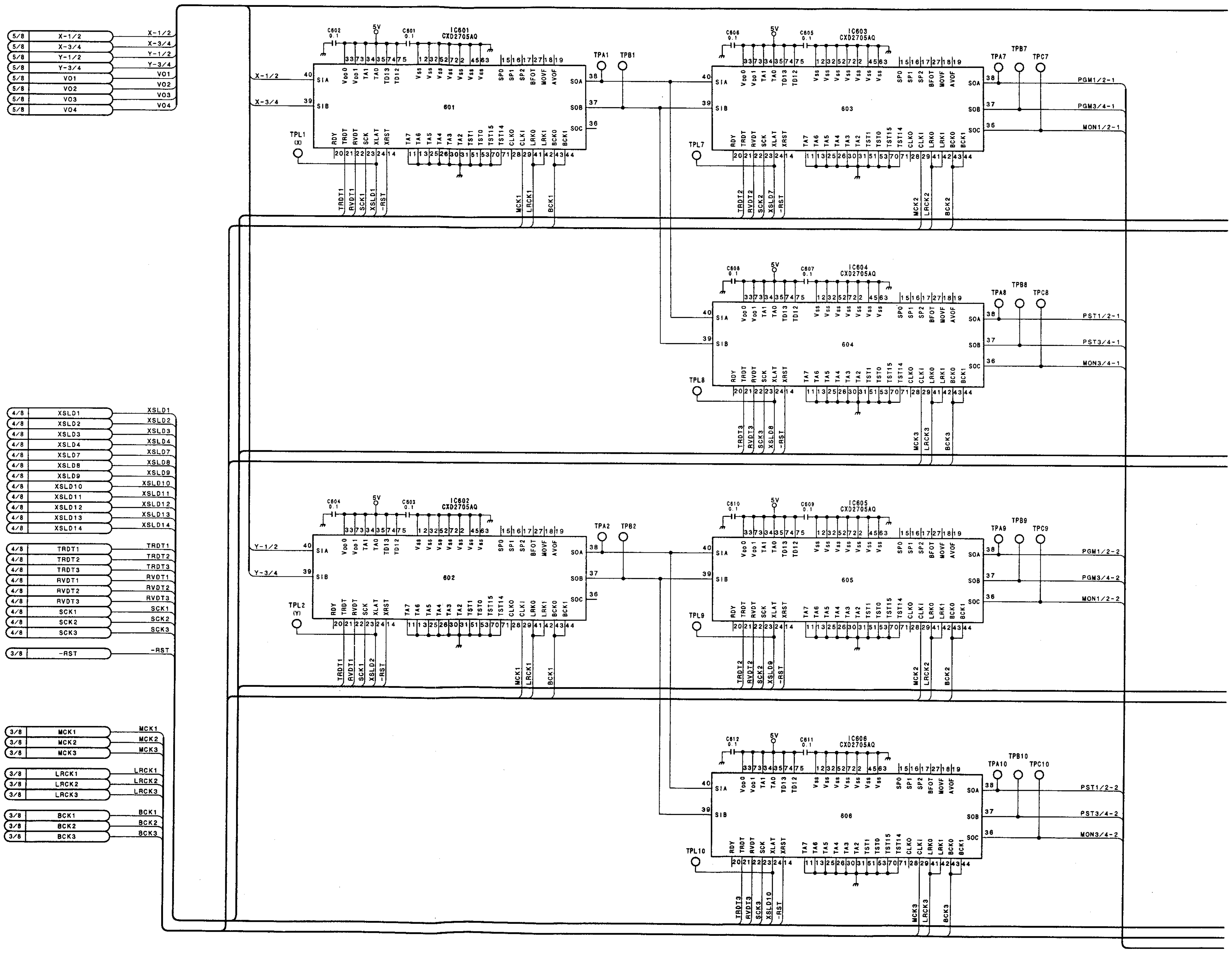

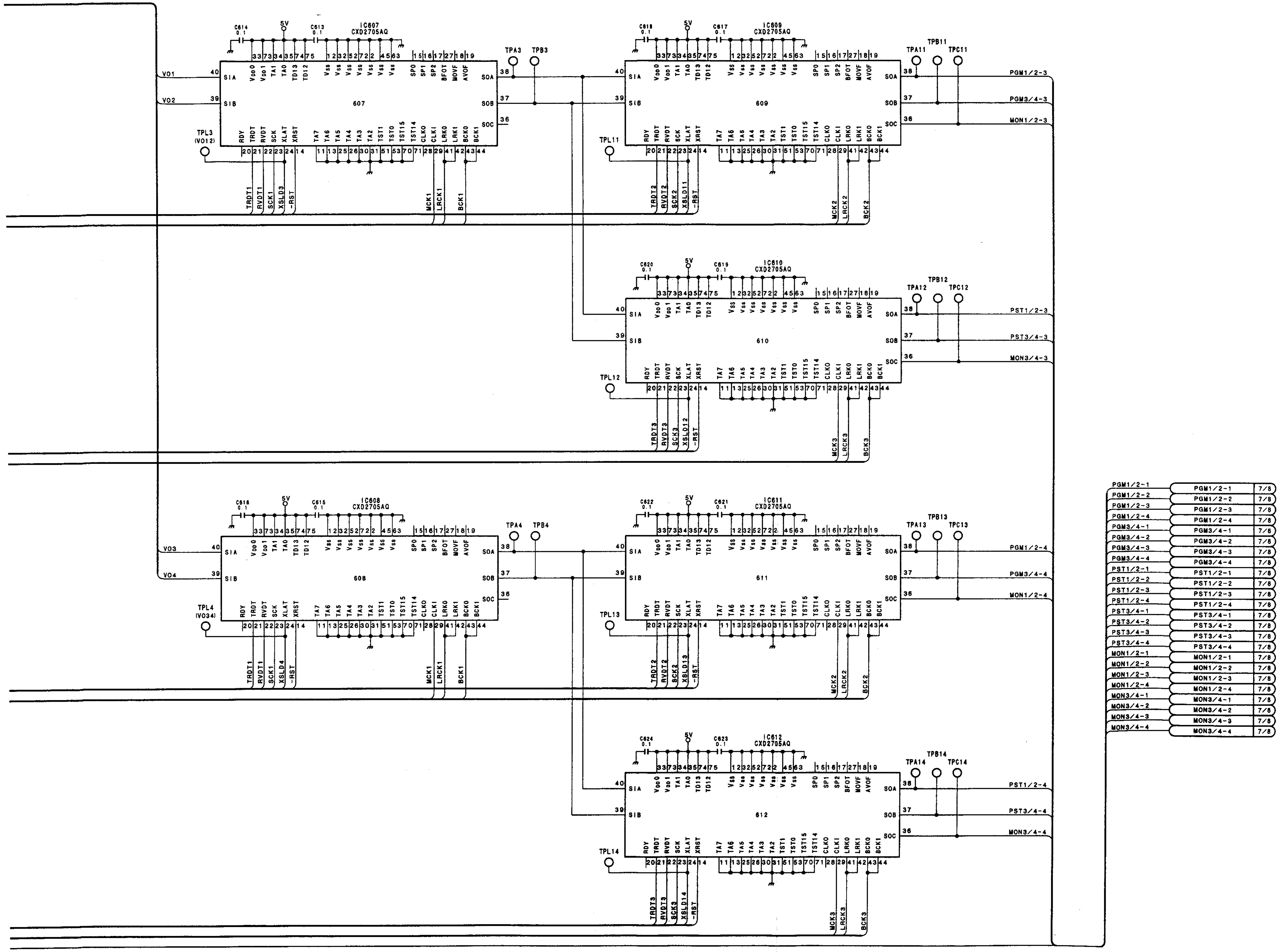

Audio Process Board
APR-8 (6/8)
BKDS-M1810/M1820
BOARD NO. 1-658-385-12
BKDS-M1810 : LOT NO. 601-
BKDS-M1820 : LOT NO. 601-
FOR DVS-M1000C
B-¥SJX053-APR8-12

I | J | K | L | M | N | O | P

BKDS-M1810 (SY) : S/N 10101 and Higher
BKDS-M1820 (SY) : S/N 10021 and Higher

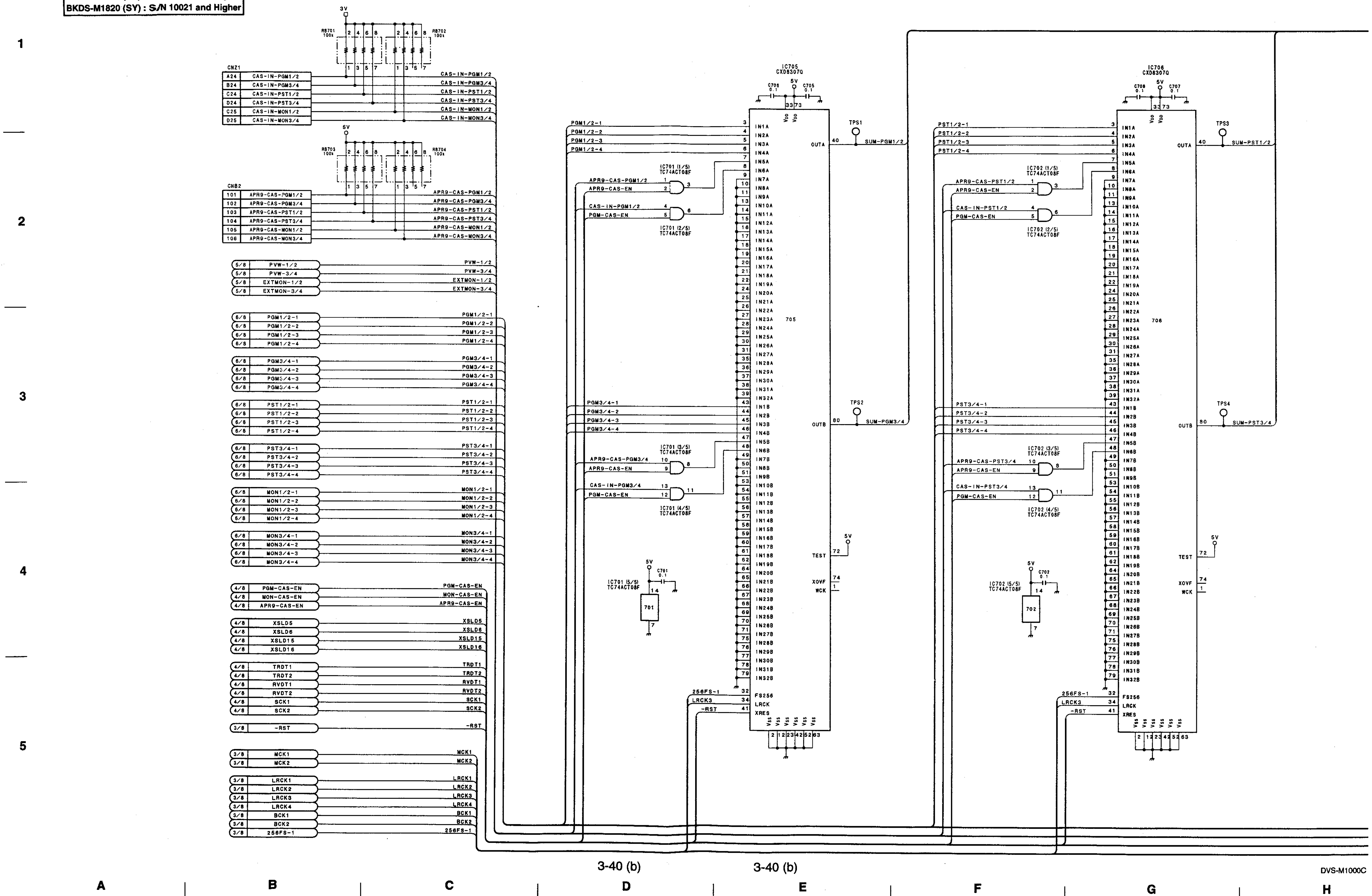

DVS-M1000C

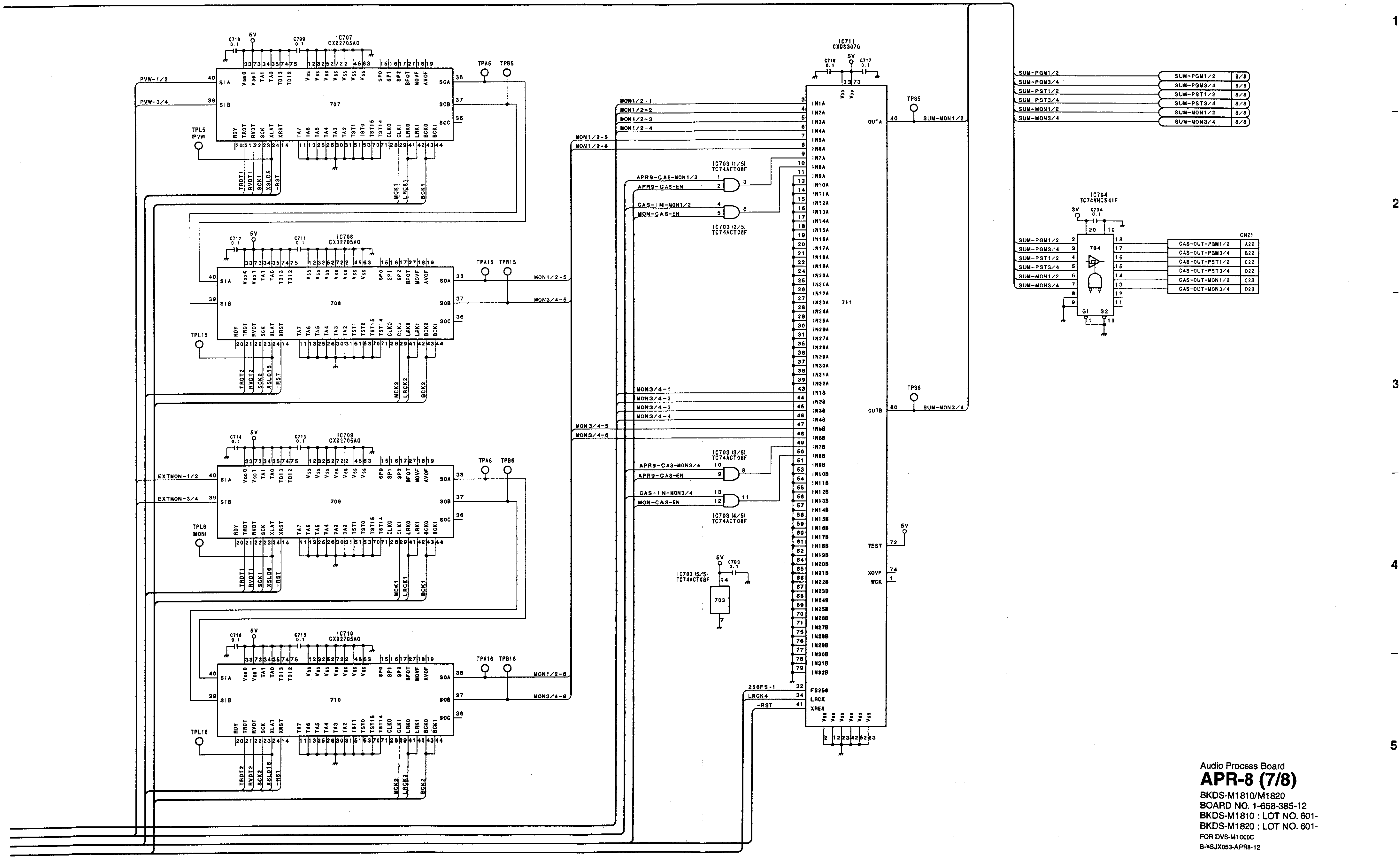

Audio Process Board
APR-8 (7/8)
BKDS-M1810/M1820
BOARD NO. 1-658-385-12
BKDS-M1810 : LOT NO. 601-
BKDS-M1820 : LOT NO. 601-
FOR DVS-M1000C
B-¥SJX053-APR8-12

BKDS-M1810 (SY) : S/N 10101 and Higher
BKDS-M1820 (SY) : S/N 10021 and Higher

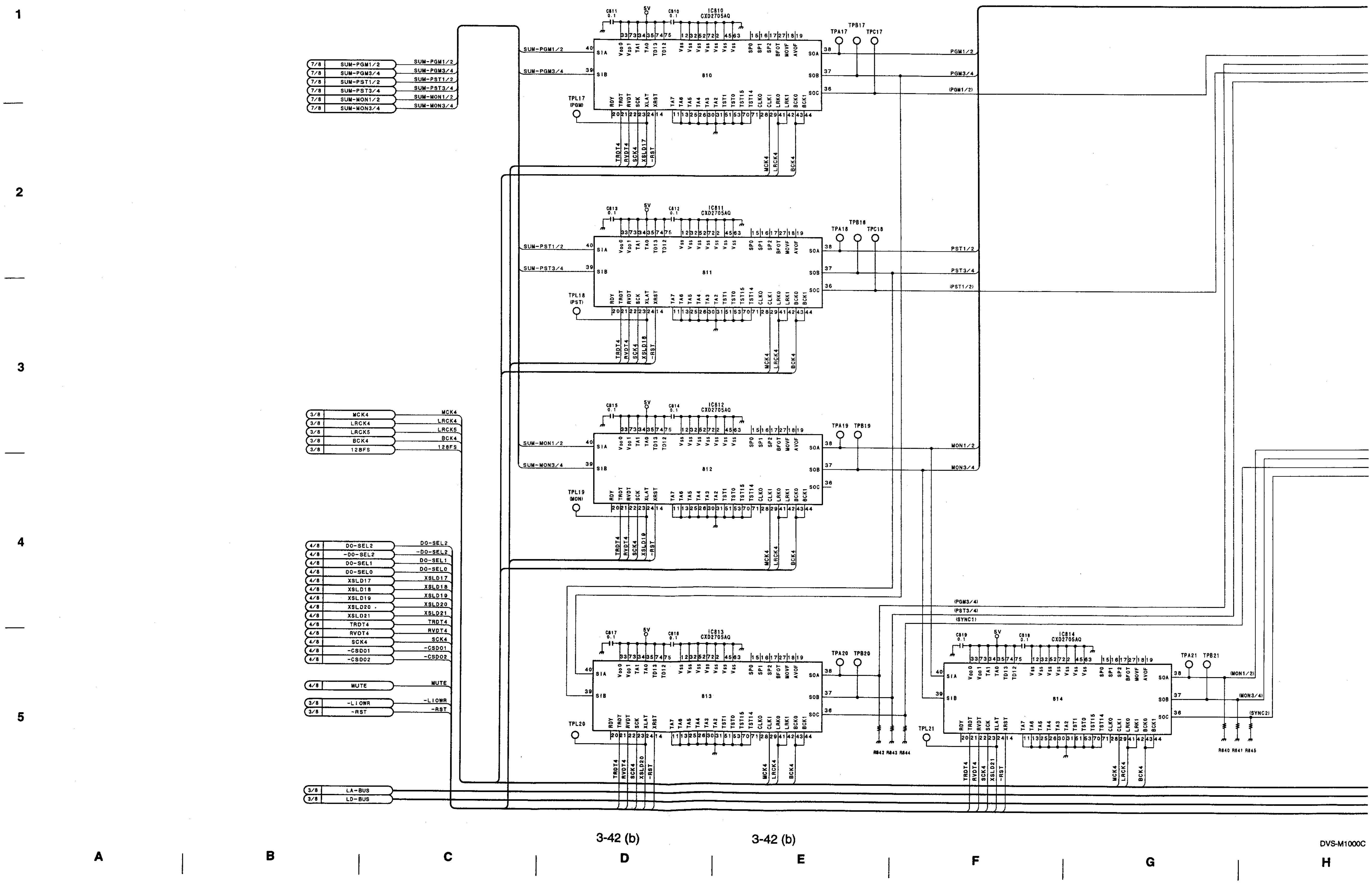

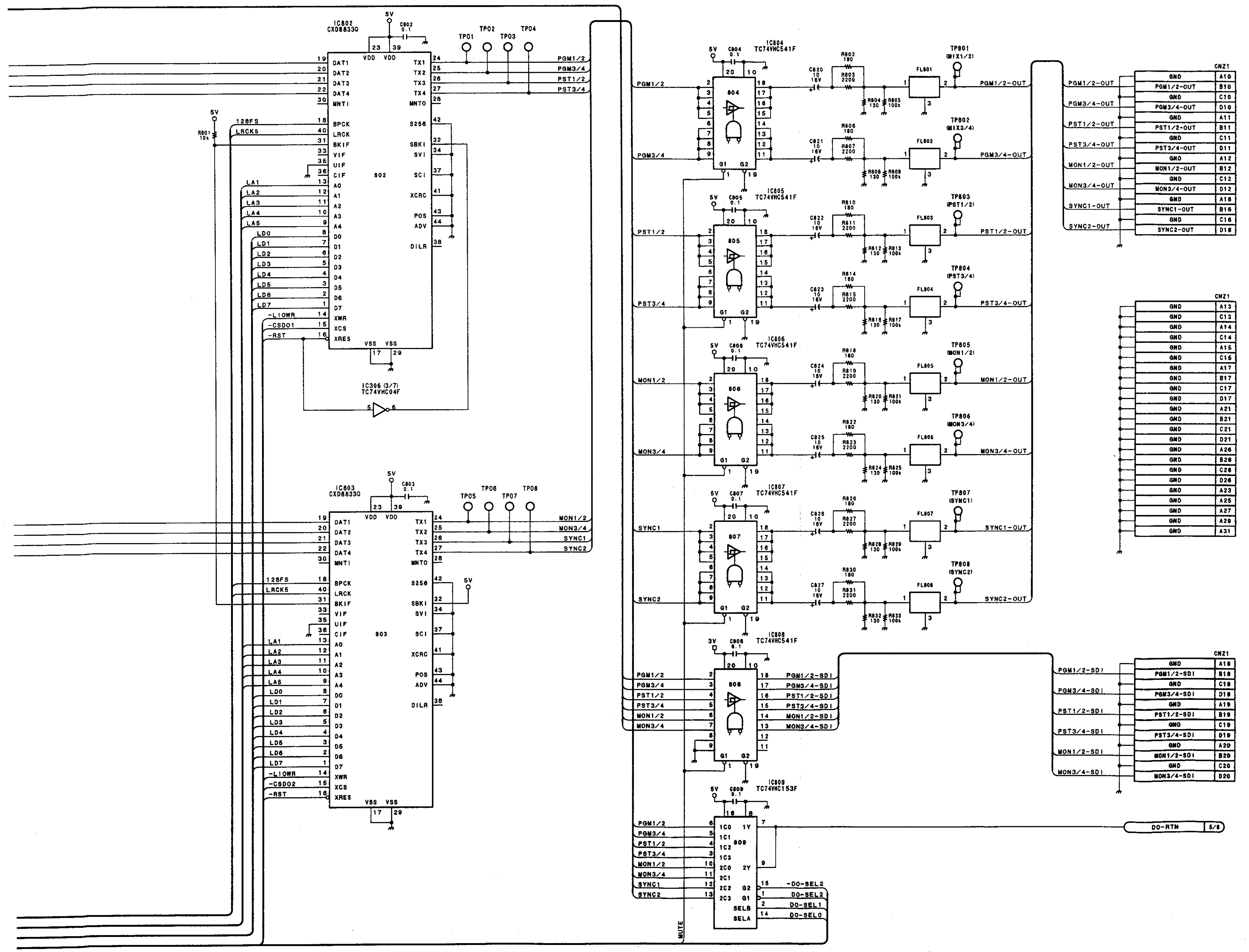

Audio Process Board
APR-8 (8/8)
BKDS-M1810/M1820
BOARD NO. 1-658-385-12
BKDS-M1810 : LOT NO. 601-
BKDS-M1820 : LOT NO. 601-
FOR DVS-M1000C
B-¥SJX053-APR8-12

APR-8 (1/8) Audio Process Board

BKDS-M1810 (SY) : S/N 10001 through 10100
BKDS-M1820 (SY) : S/N 10001 through 10020

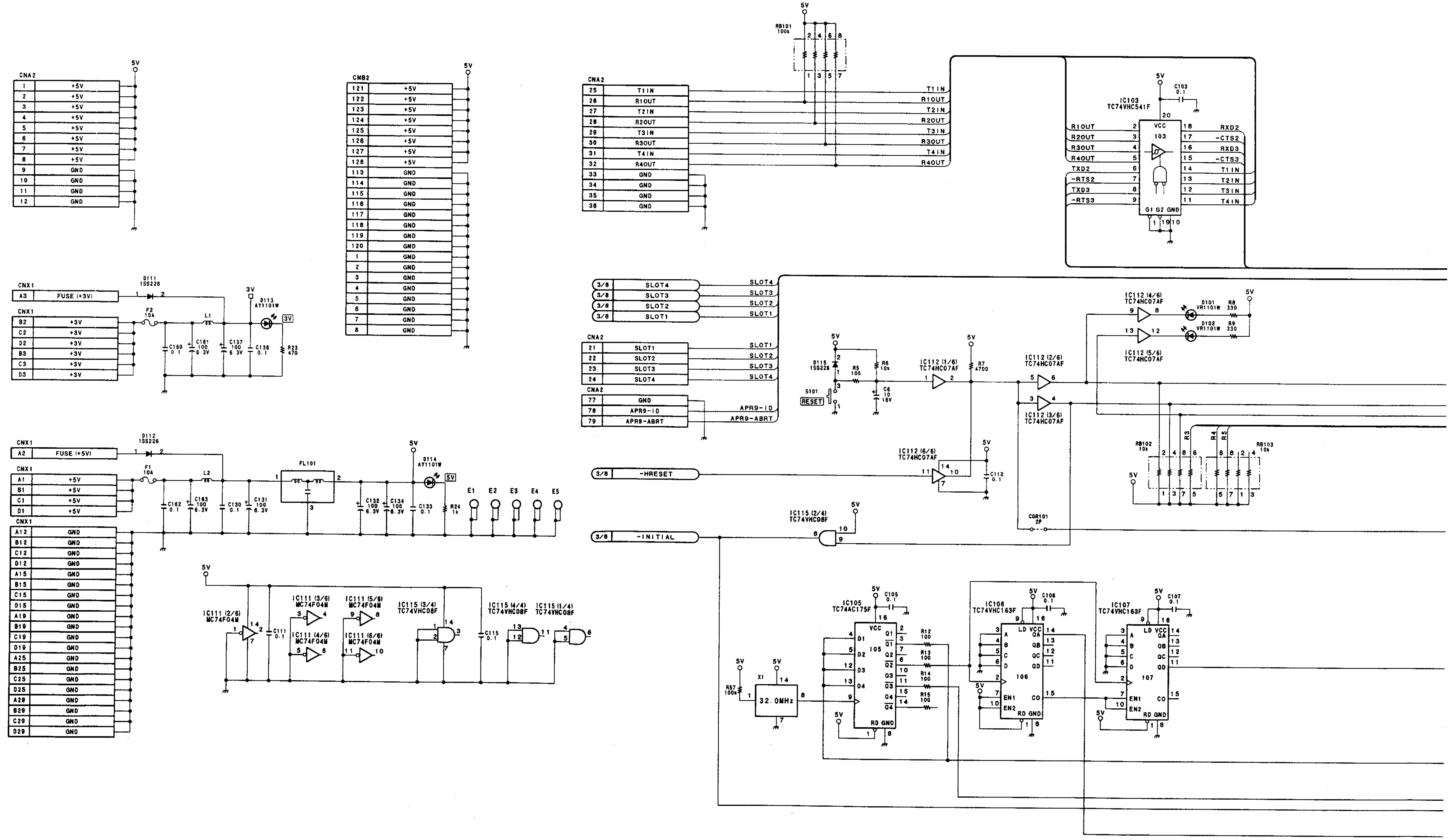

1
2
3
4
5

A B C D E F G H

3-28 (a)

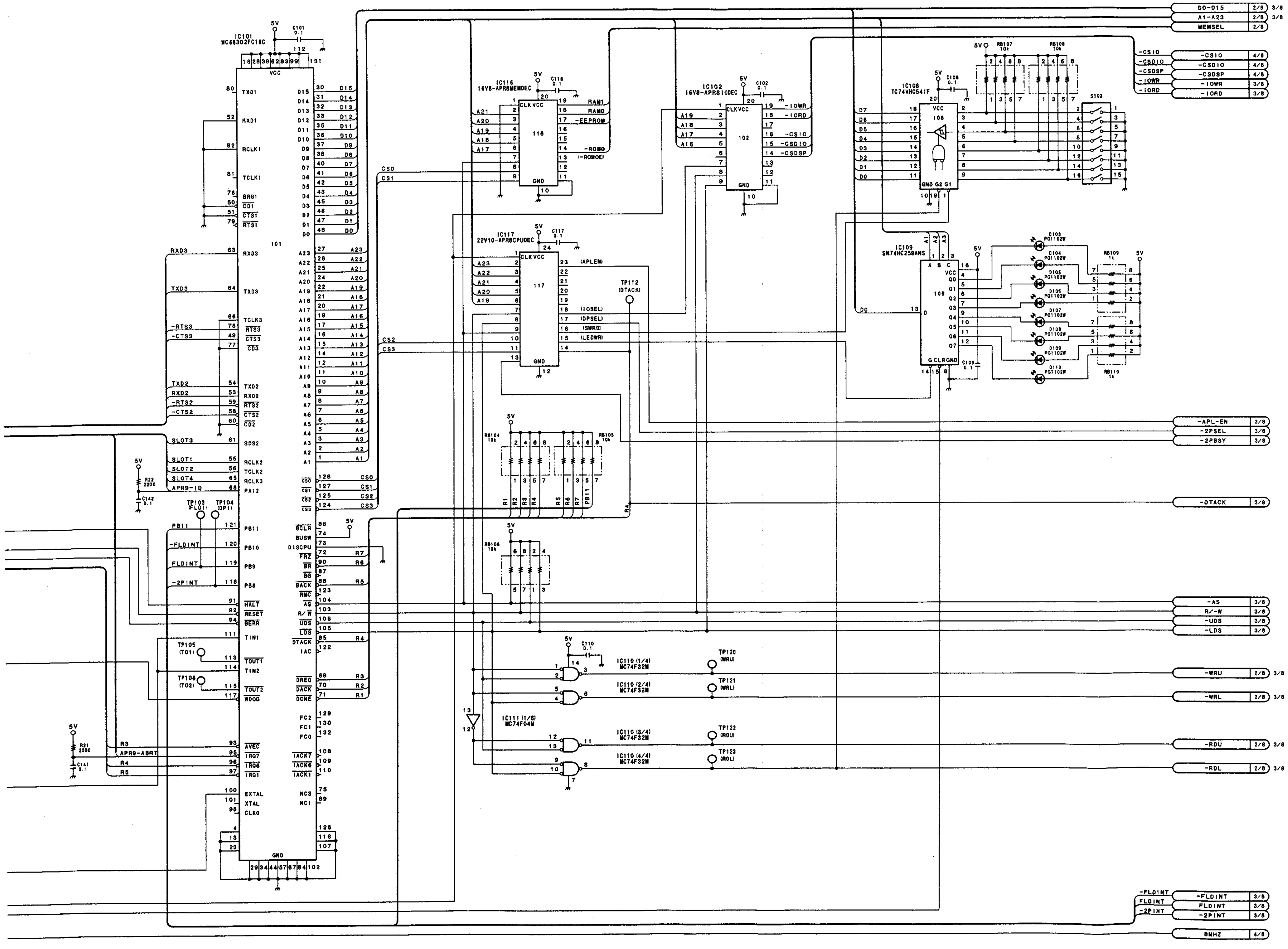

Audio Process Board
APR-8 (1/8)
BKDS-M1810/M1820
BOARD NO. 1-658-385-11
BKDS-M1810 : LOT NO. 506-512
BKDS-M1820 : LOT NO. 511-512
FOR DVS-M1000C
B-¥SJX053-APR8

BKDS-M1810 (SY) : S/N 10001 through 10100
BKDS-M1820 (SY) : S/N 10001 through 10020

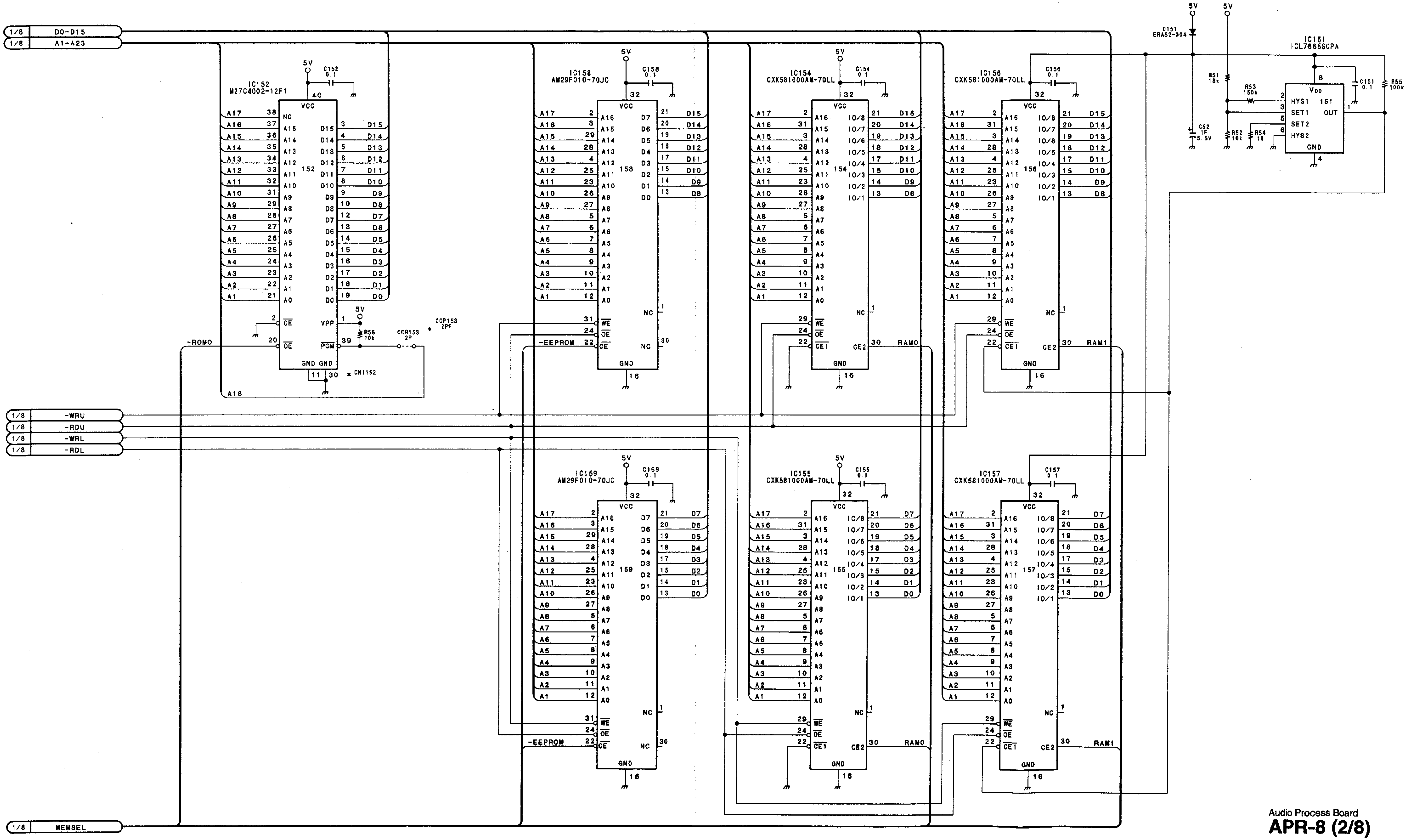

Audio Process Board
APR-8 (2/8)
BKDS-M1810/M1820
BOARD NO. 1-658-385-11
BKDS-M1810 : LOT NO. 506-512
BKDS-M1820 : LOT NO. 511-512
FOR DVS-M1000C
B-¥SJX053-APR8

BKDS-M1810 (SY) : S/N 10001 through 10100
BKDS-M1820 (SY) : S/N 10001 through 10020

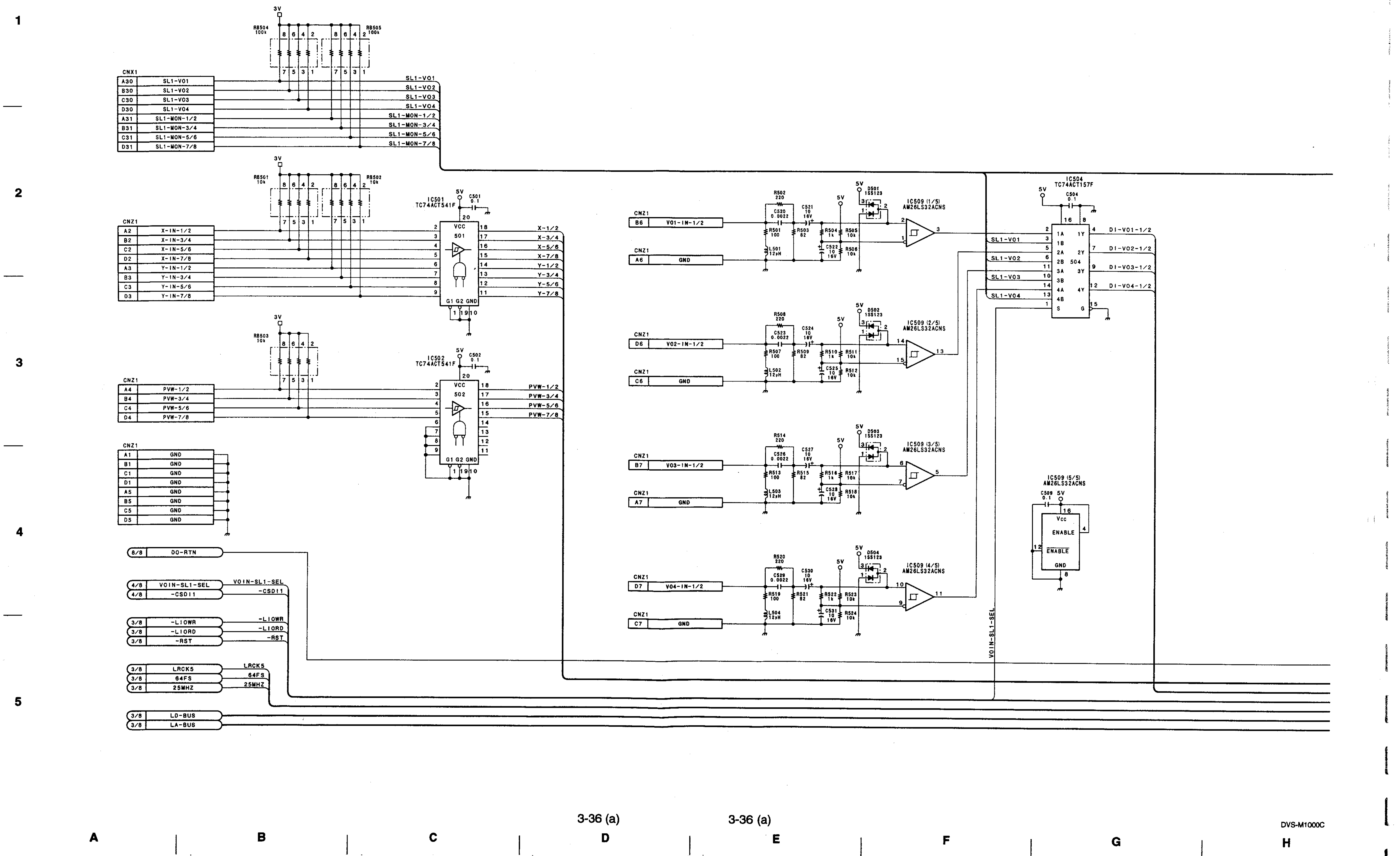

DVS-M1000C

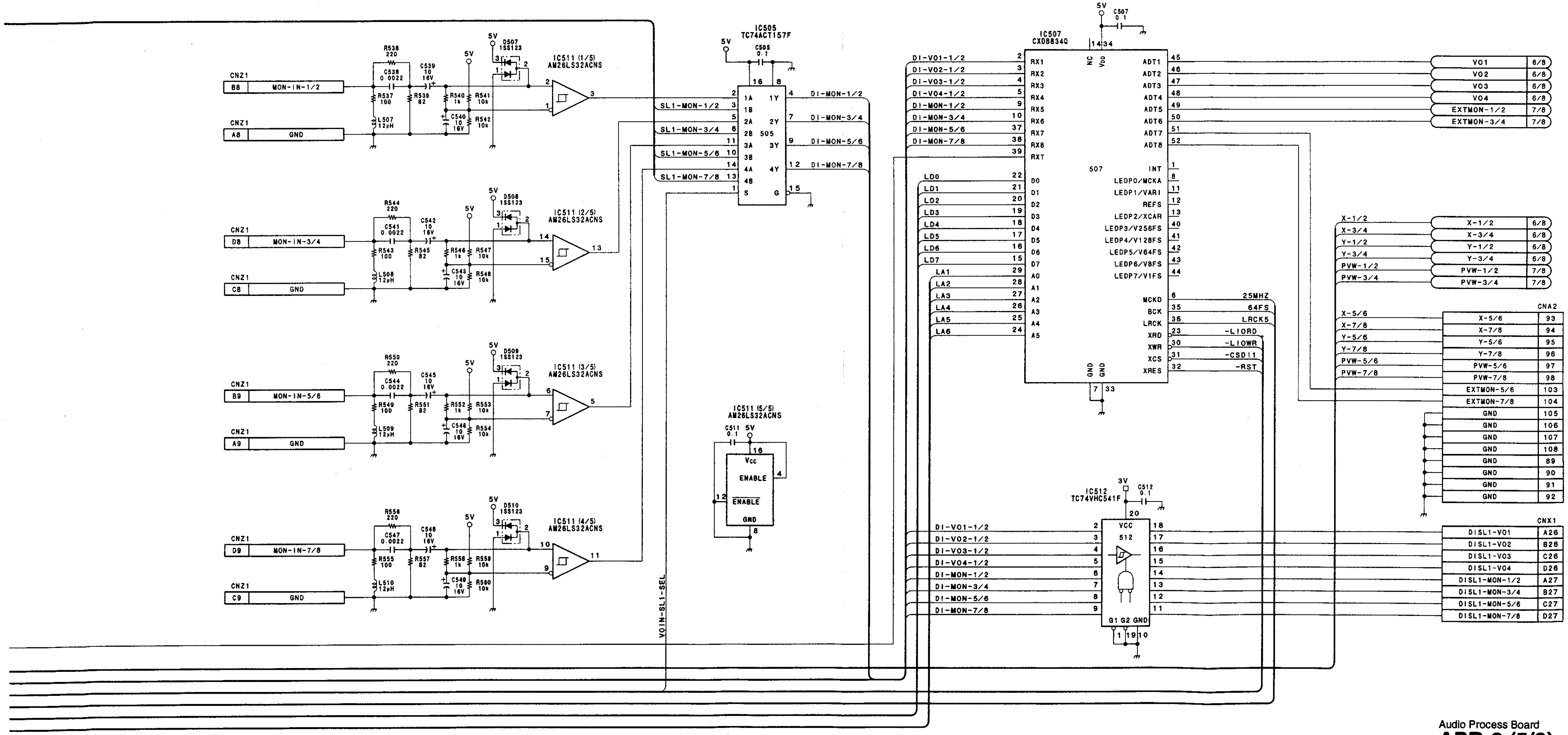

Audio Process Board
APR-8 (5/8)
BKDS-M1810/M1820
BOARD NO. 1-658-385-11
BKDS-M1810 : LOT NO. 506-512
BKDS-M1820 : LOT NO. 511-512
FOR DVS-M1000C
B-¥SJX053-APR8

BKDS-M1810 (SY) : S/N 10001 through 10100
BKDS-M1820 (SY) : S/N 10001 through 10020

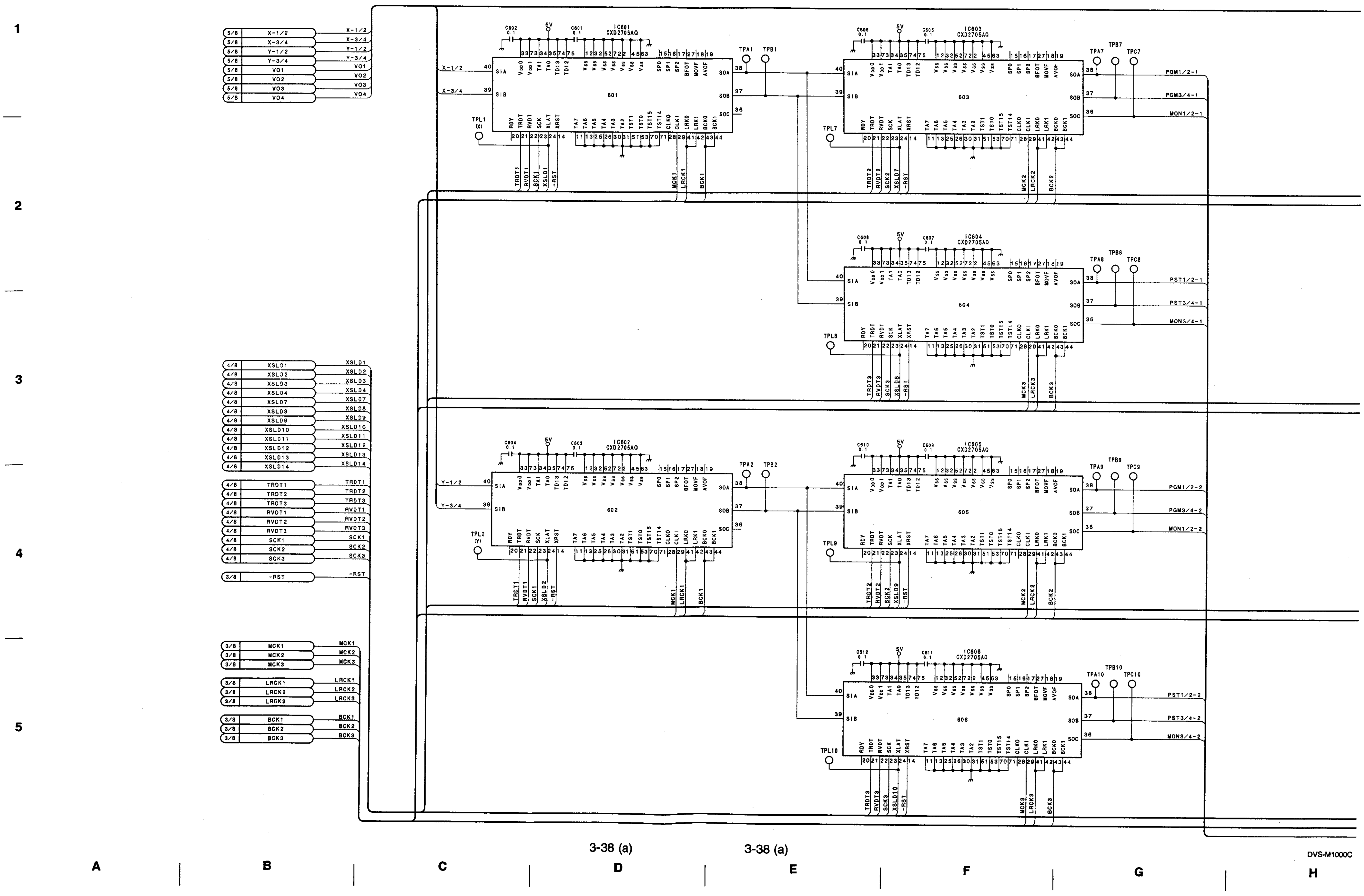

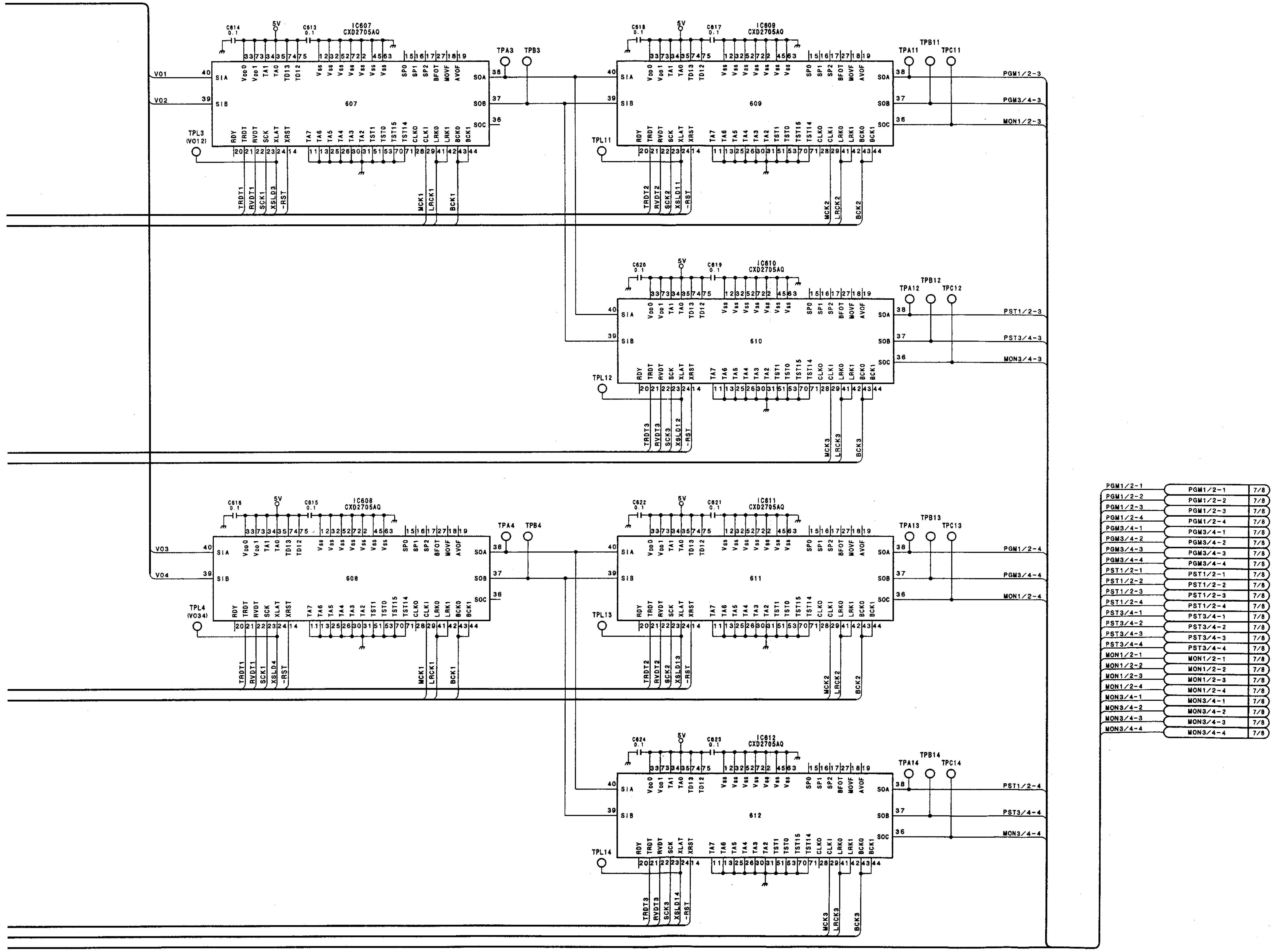

Audio Process Board

APR-8 (6/8)

BKDS-M1810/M1820
BOARD NO. 1-658-385-11
BKDS-M1810 : LOT NO. 506-512
BKDS-M1820 : LOT NO. 511-512
FOR DVS-M1000C
B-¥SJX053-APR8

BKDS-M1810 (SY) : S/N 10001 through 10100
BKDS-M1820 (SY) : S/N 10001 through 10020

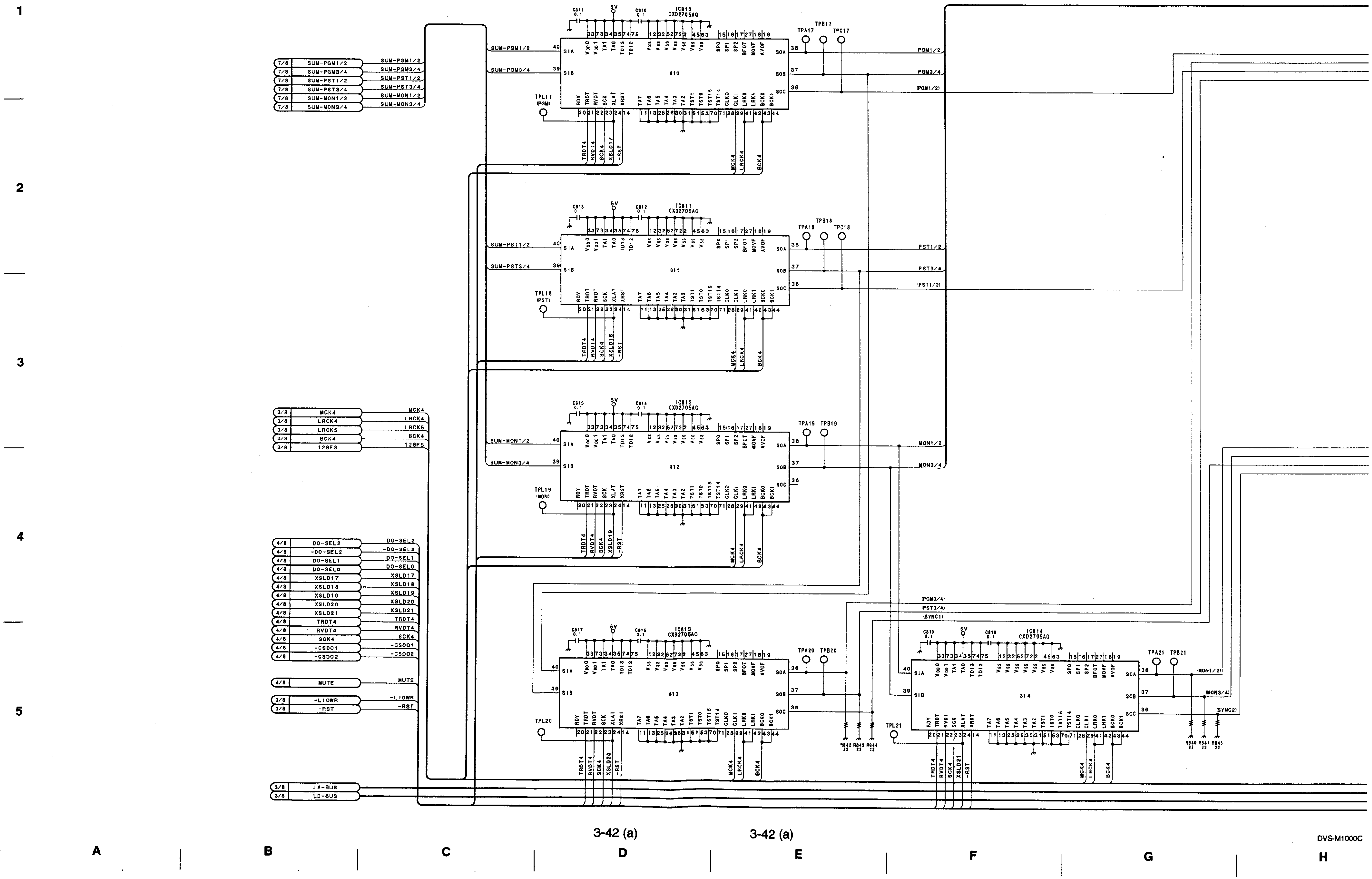

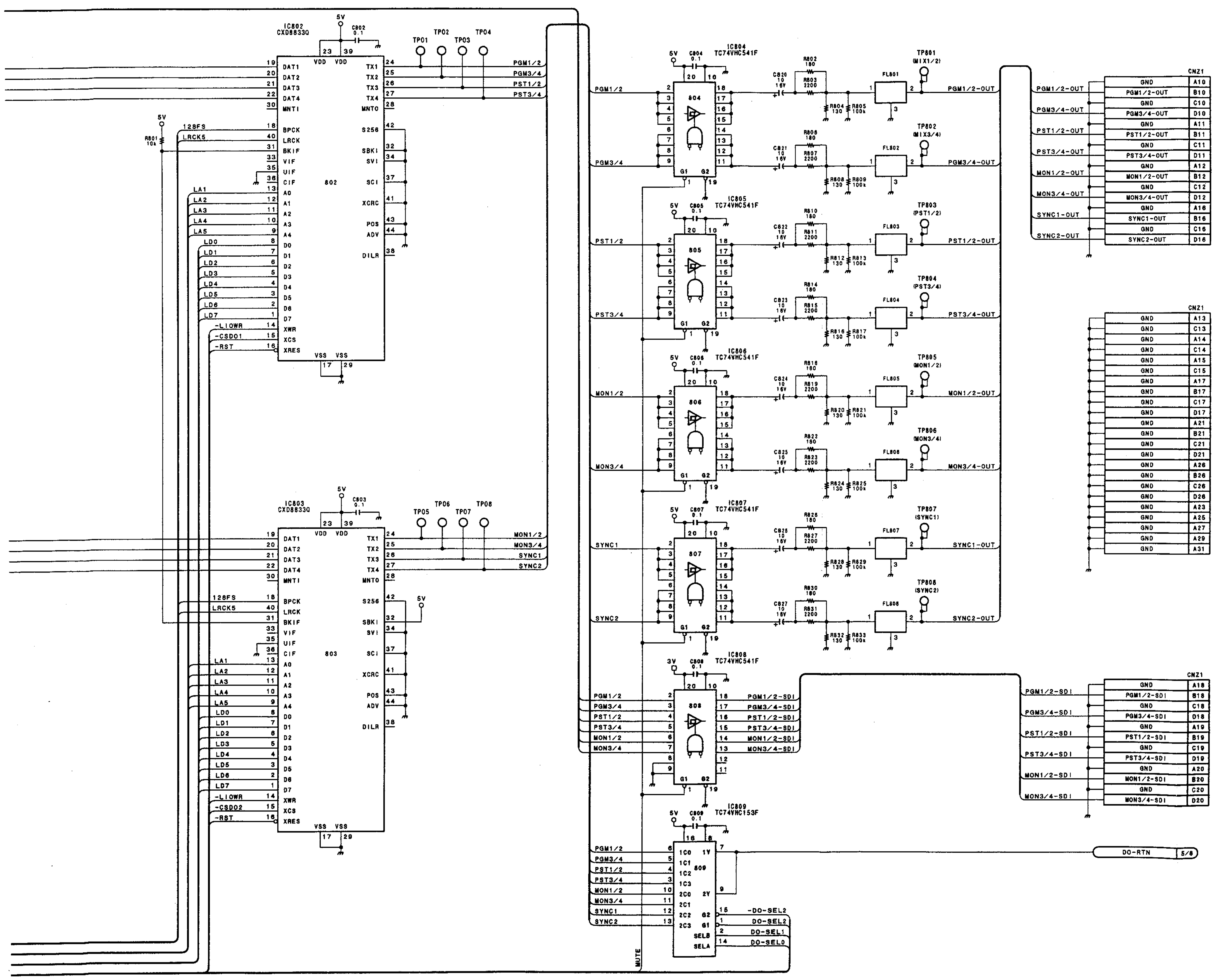

Audio Process Board
APR-8 (8/8)
BKDS-M1810/M1820
BOARD NO. 1-658-385-11
BKDS-M1810 : LOT NO. 506-512
BKDS-M1820 : LOT NO. 511-512
FOR DVS-M1000C
B-¥SJX053-APR8

BKDS-M1820 (SY) : S/N 10001 and Higher

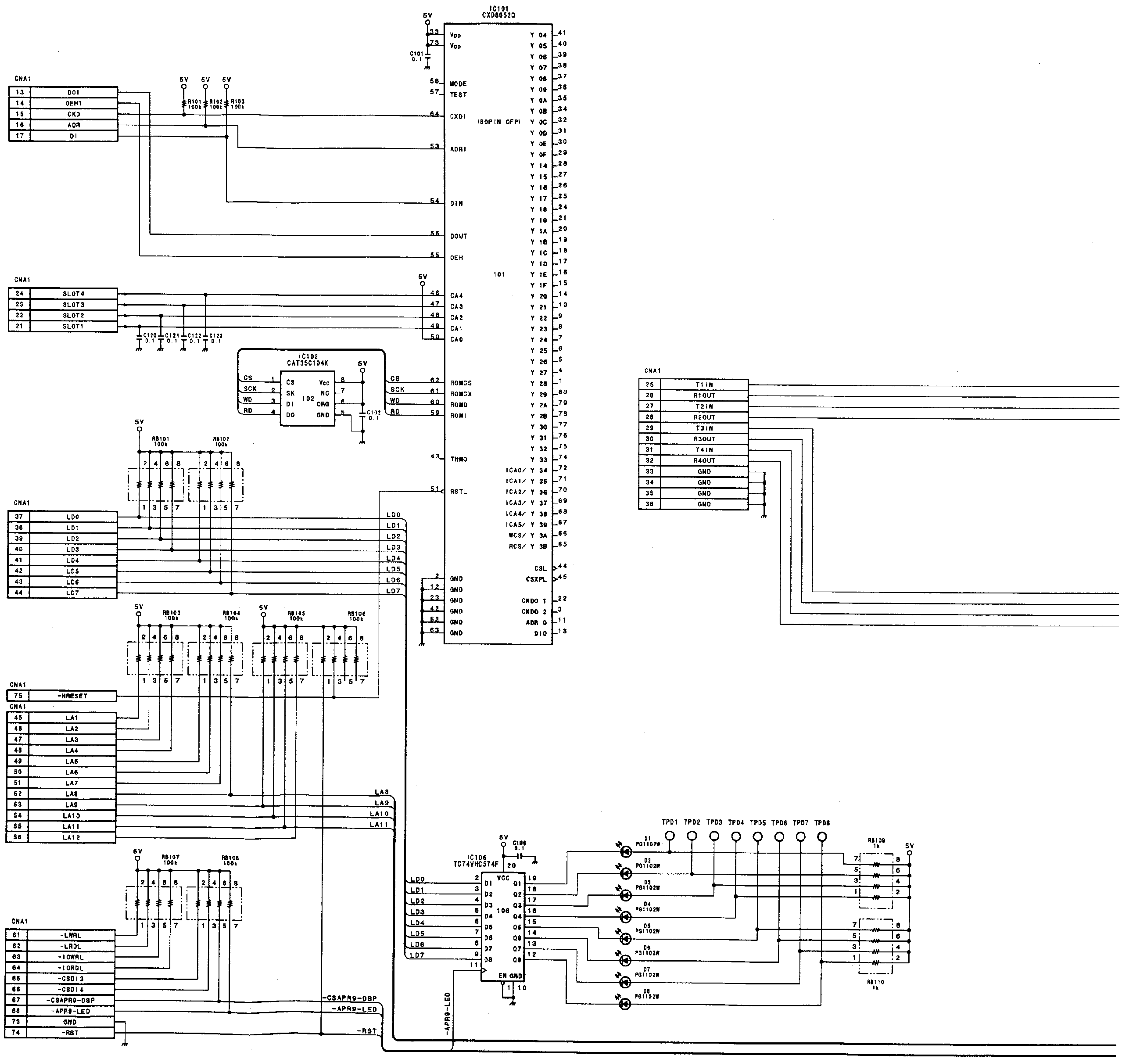

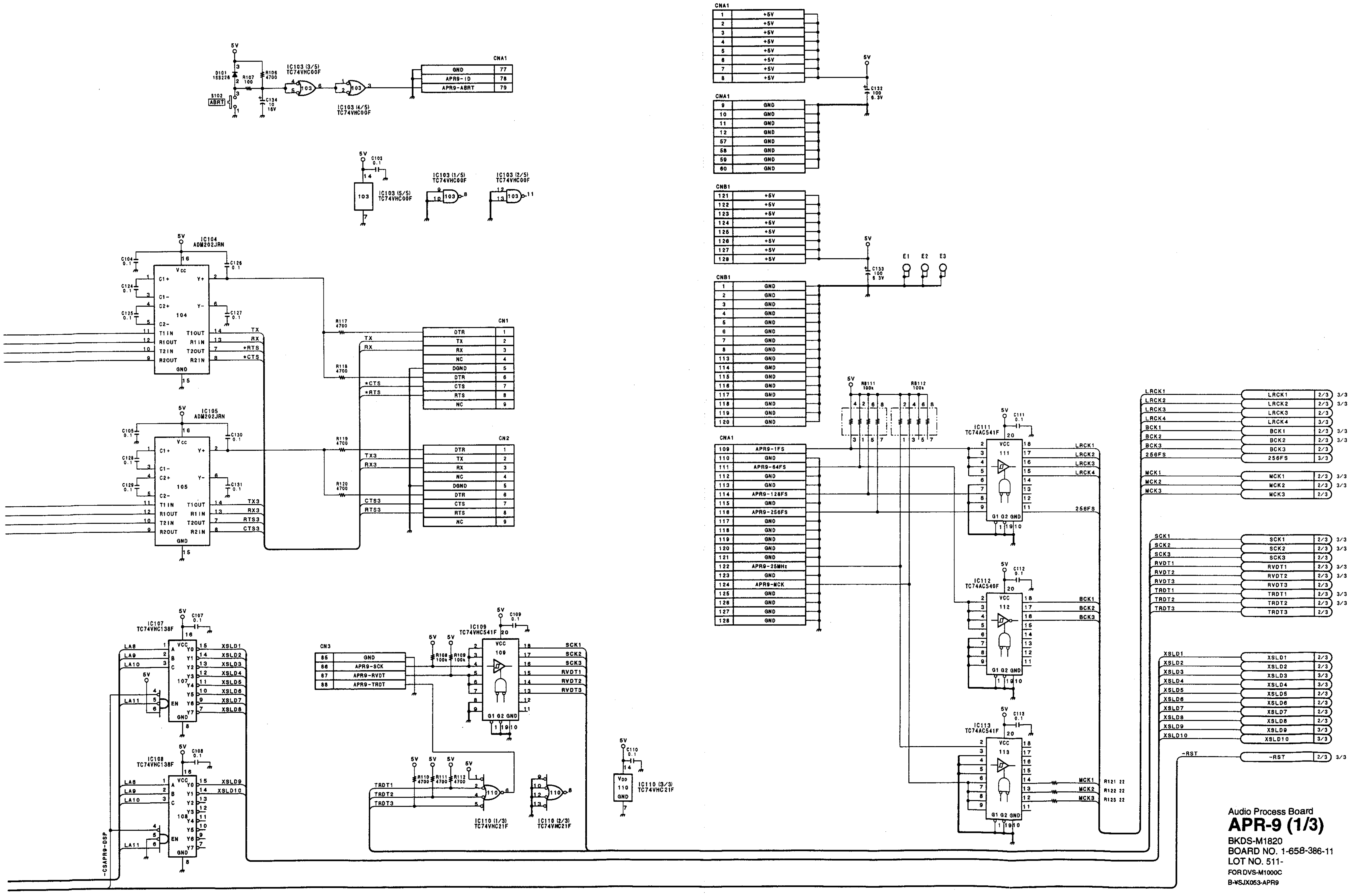

Audio Process Board
APR-9 (1/3)
BKDS-M1820
BOARD NO. 1-658-386-11
LOT NO. 511-
FOR DVS-M1000C
B-WSJX053-APR9

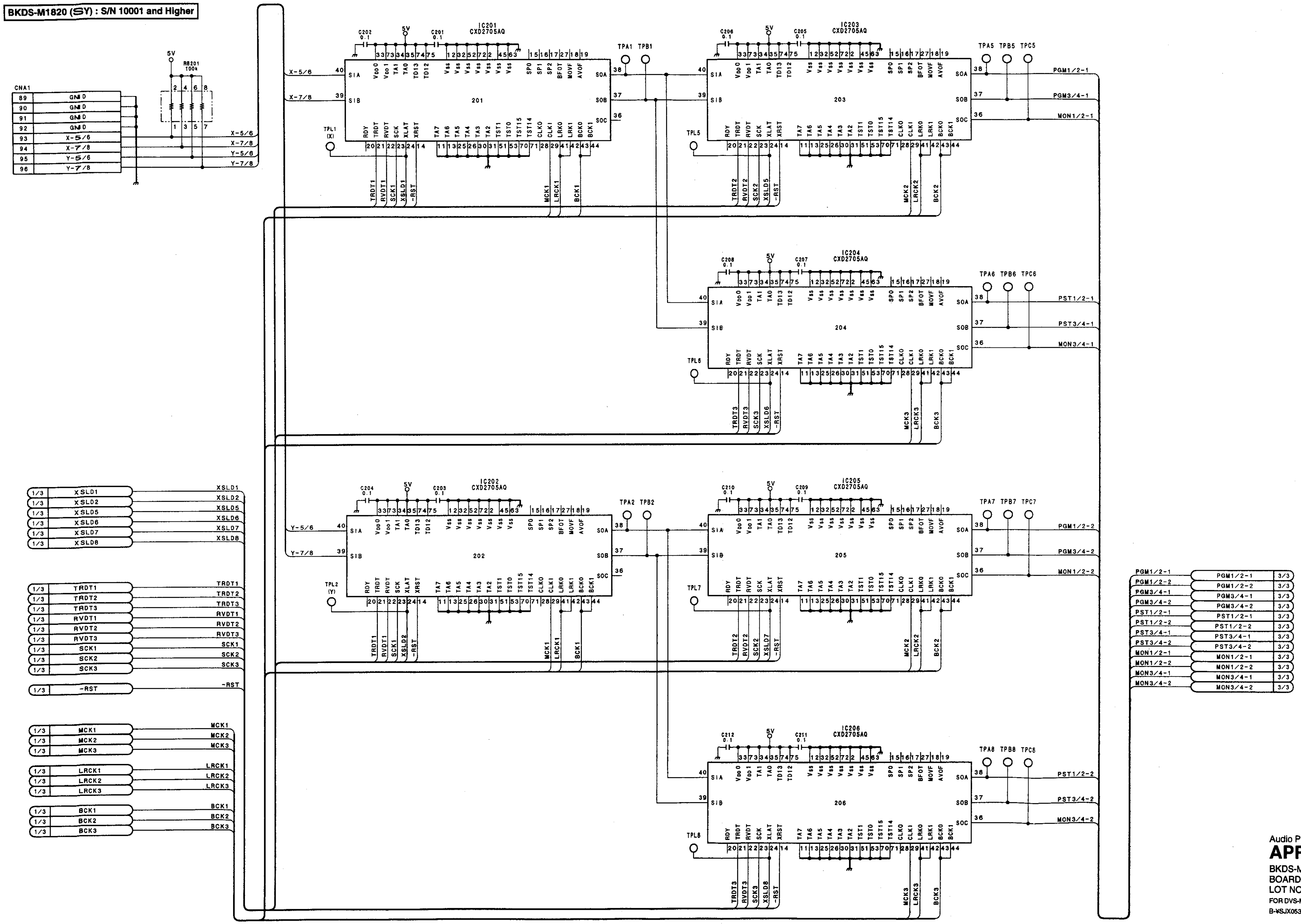

1

2

3

4

5

Audio Process Board
APR-9 (2/3)
BKDS-M1820
BOARD NO. 1-658-386-11
LOT NO. 511-
FOR DVS-M1000C
B-¥SJX053-APR9

BKDS-M1820 (SY) : S/N 10001 and Higher

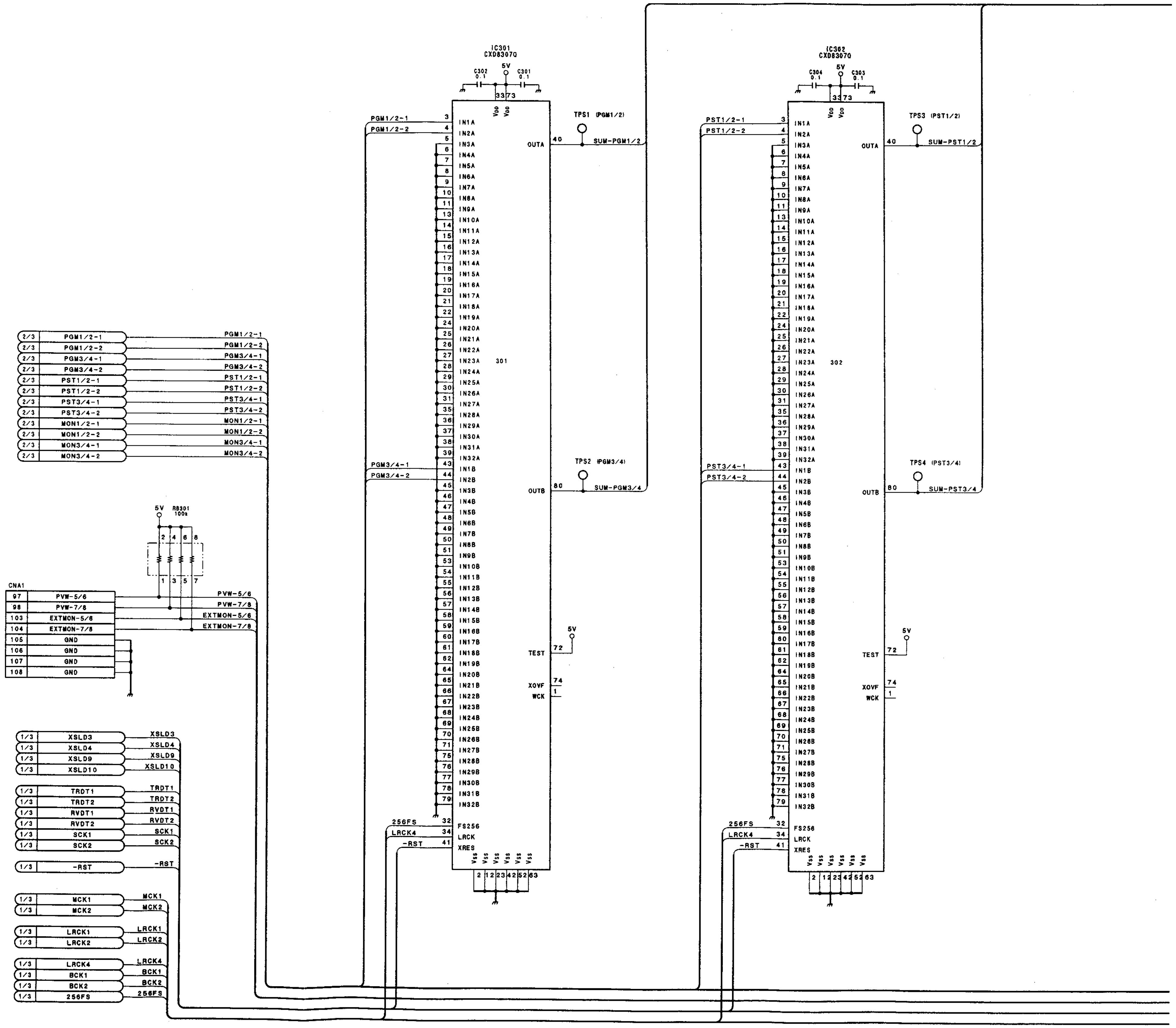

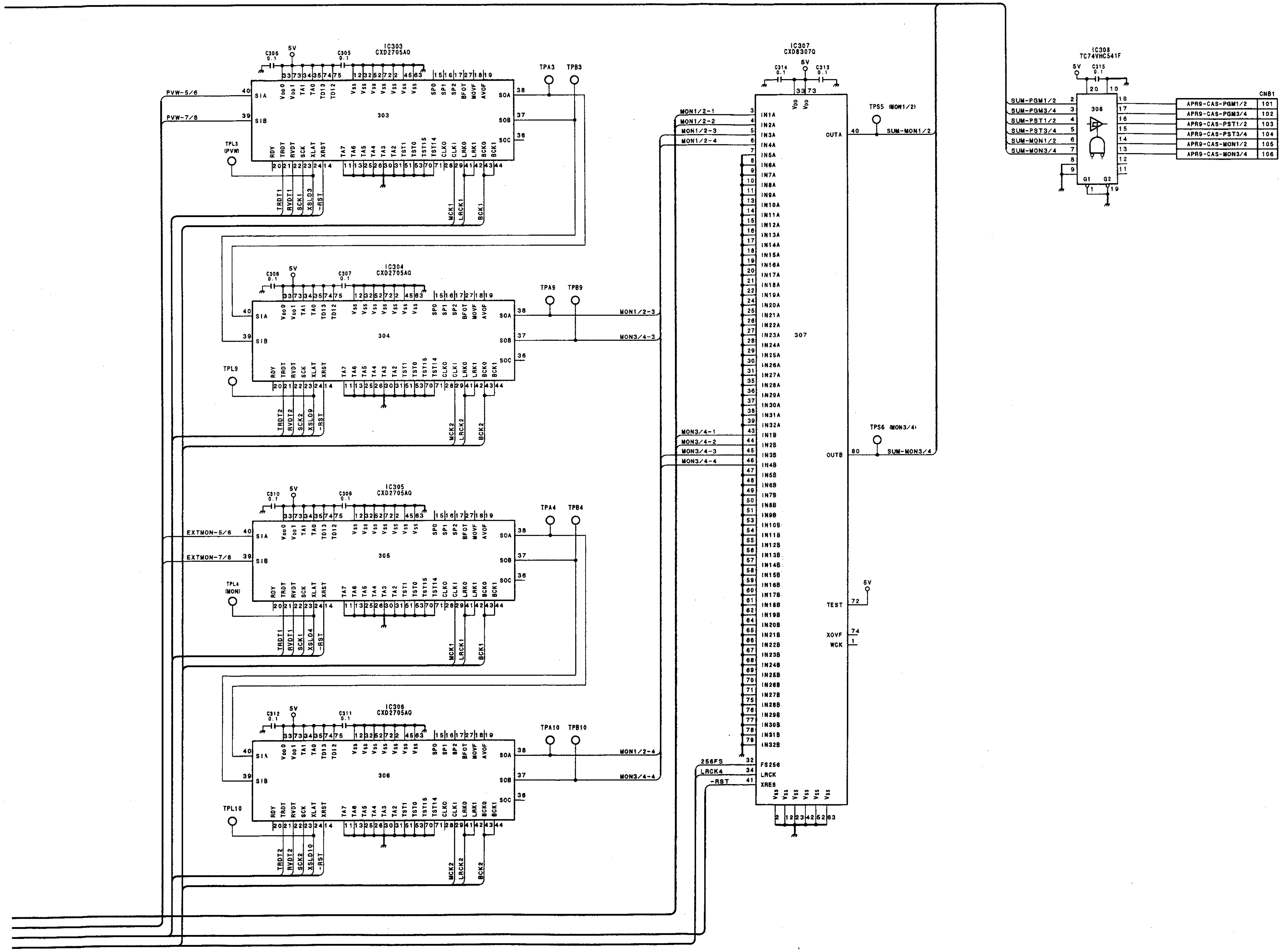

Audio Process Board
APR-9 (3/3)
BKDS-M1820
BOARD NO. 1-658-386-11
LOT NO. 511-
FOR DVS-M1000C
B-¥SJX053-APR9

I J K L M N O P

BKDS-M1810 (SY) : S/N 10001 and Higher

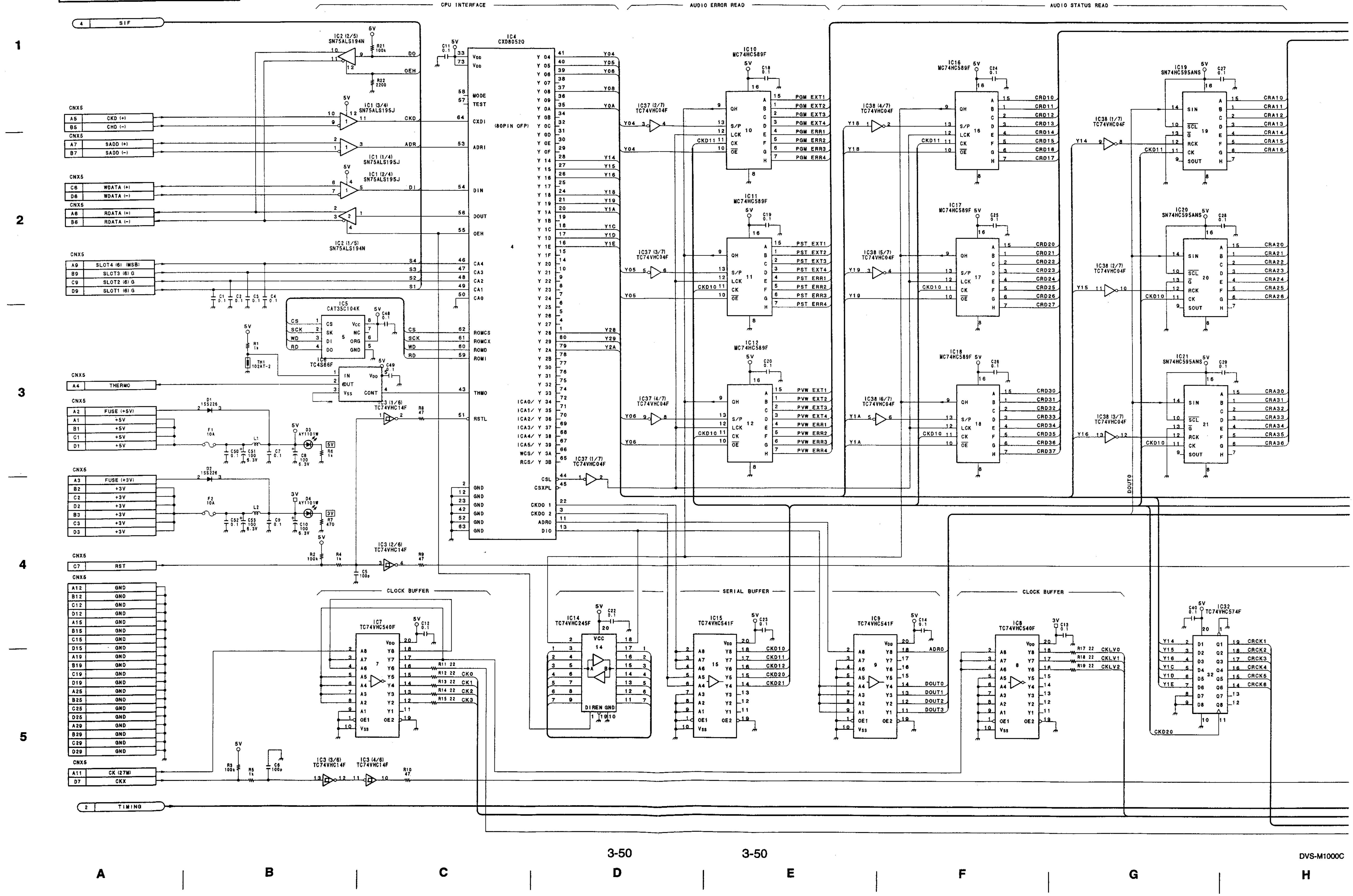

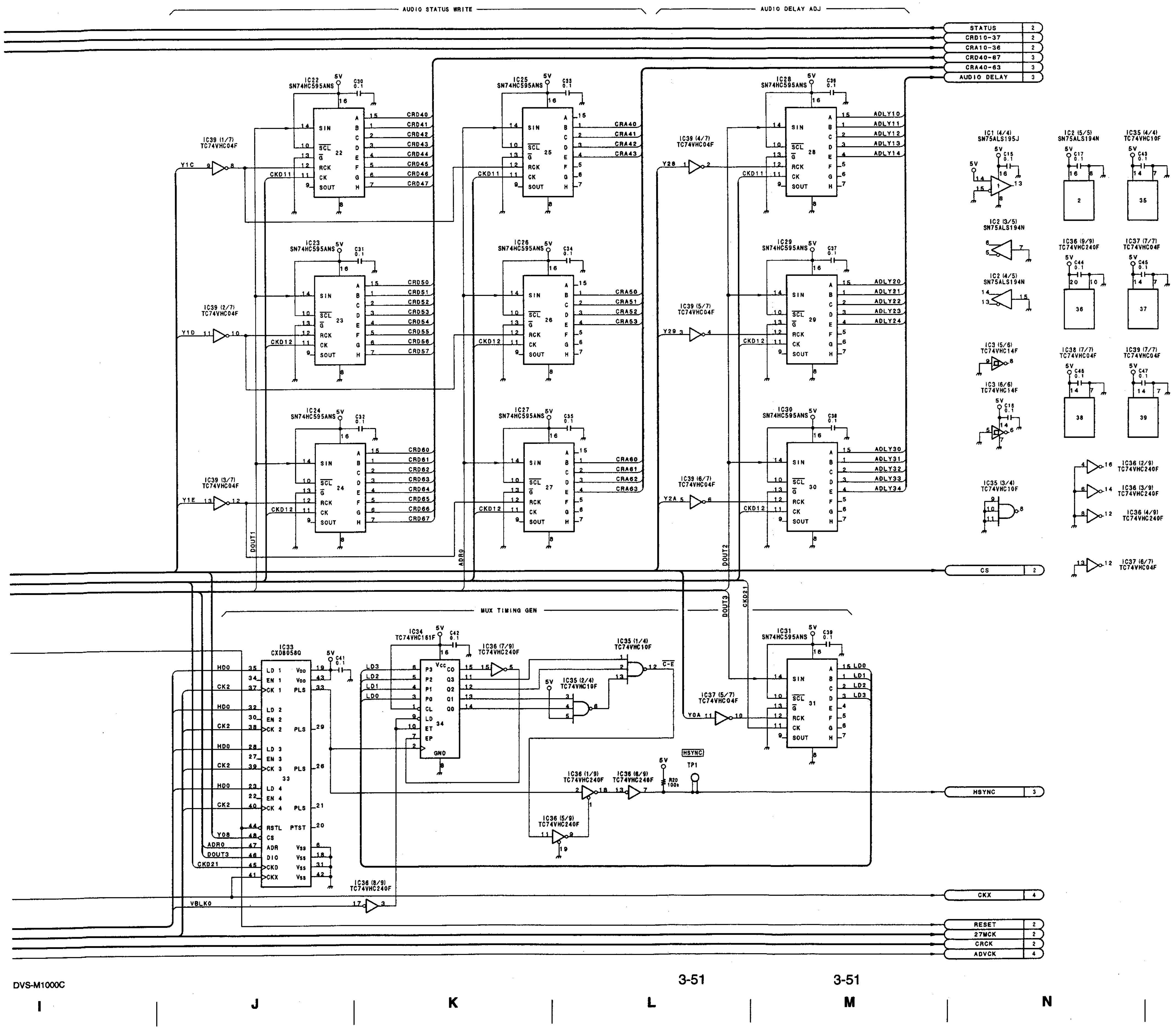

A/V Demultiplex/Multiplex Board
AVD-3 (1/4)
BKDS-M1810
BOARD NO. 1-658-384-11/12
LOT NO. 506-
FOR DVS-M1000C
B-¥SJX053-AVD3

AVD-3 (2/4) A/V Demultiplex/Multiplex Board

BKDS-M1810 (SY) : S/N 10001 and Higher

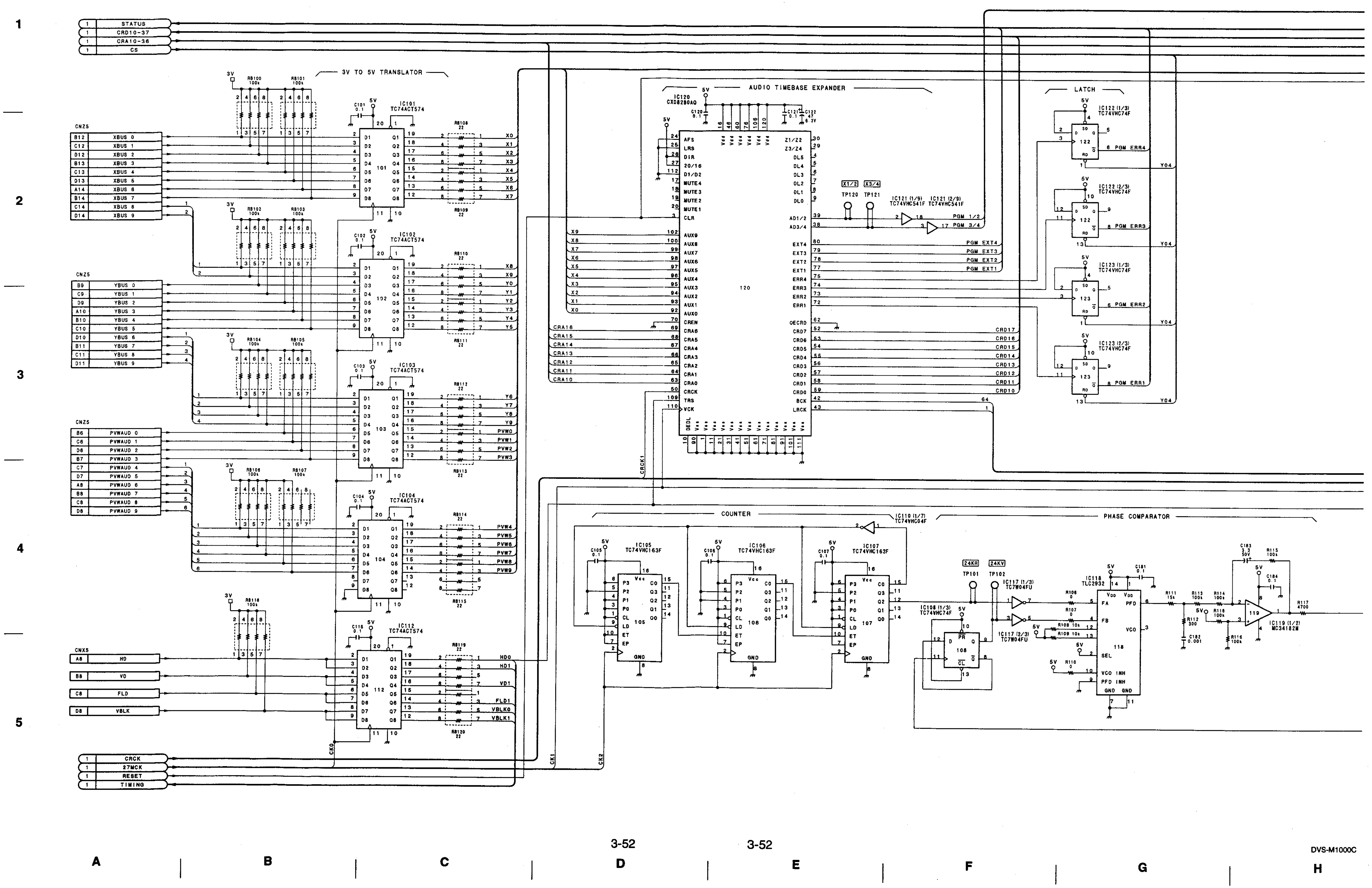

3-52

 AVD-3 (2/4) A/V Demultiplex/Multiplex Board

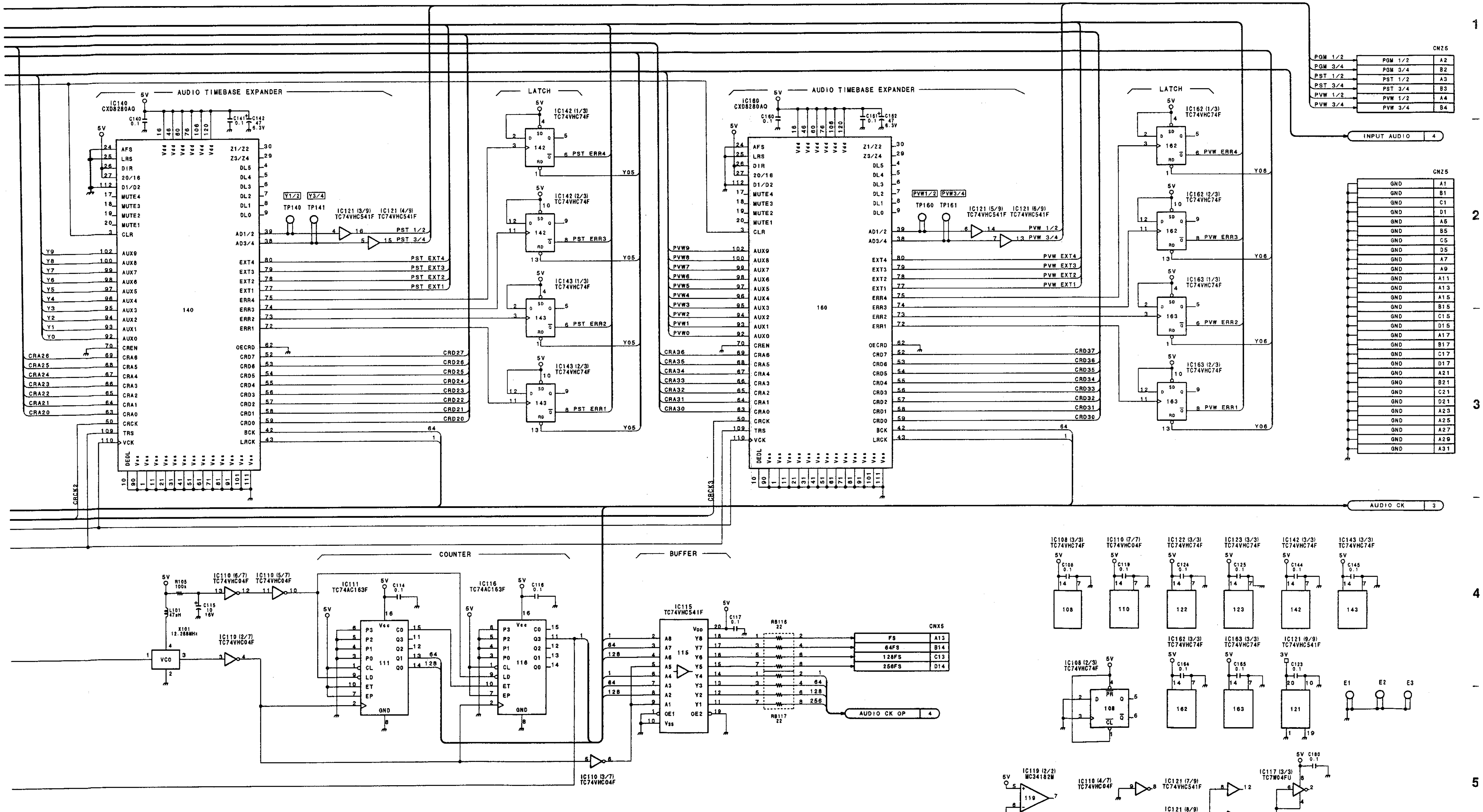

A/V Demultiplex/Multiplex Board
AVD-3 (2/4)
BKDS-M1810
BOARD NO. 1-658-384-11/12
LOT NO. 506-
FOR DVS-M1000C
B-¥SJX053-AVD3

BKDS-M1810 (SY) : S/N 10001 and Higher

1

2

3

4

5

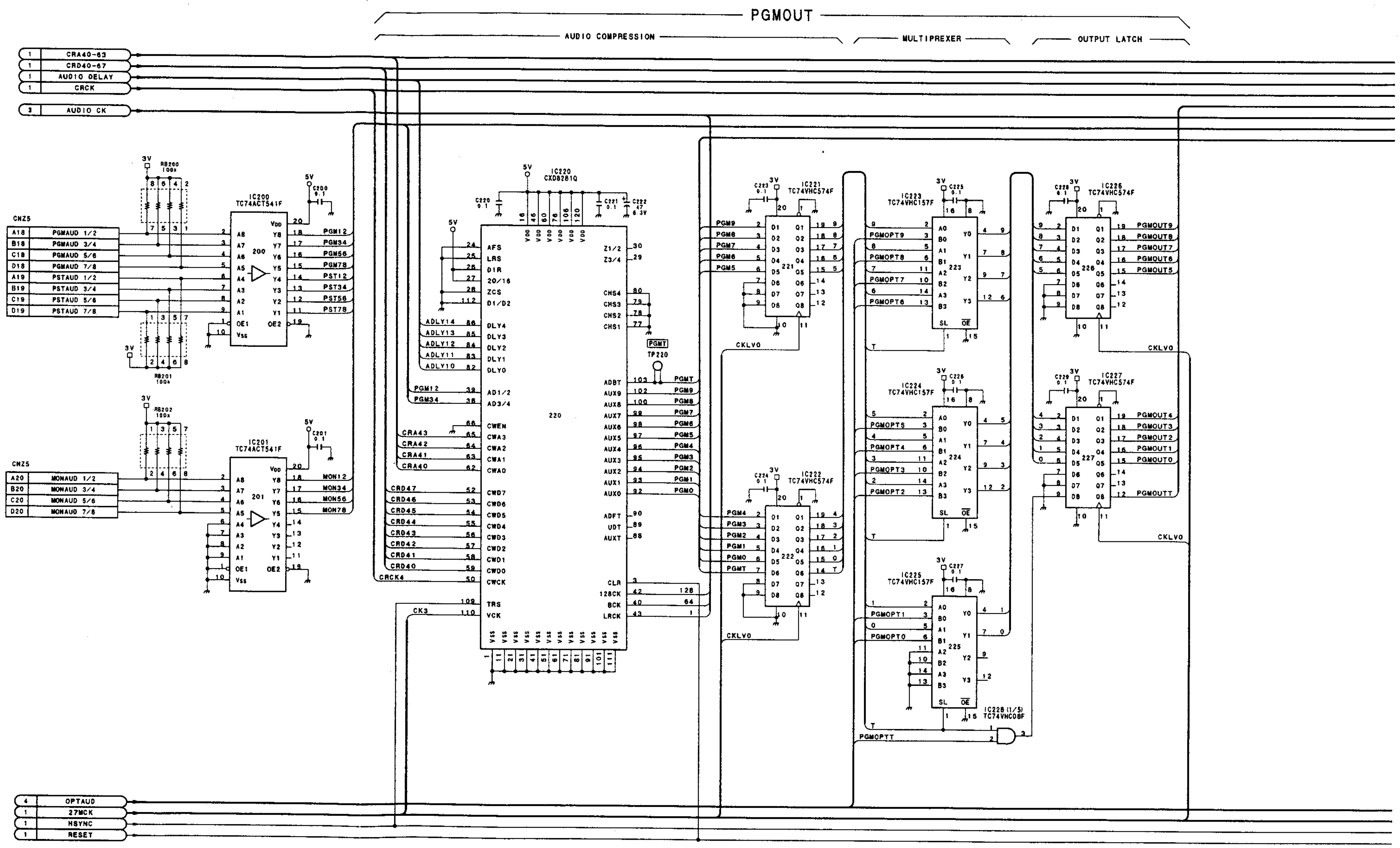

A B C D E F G H

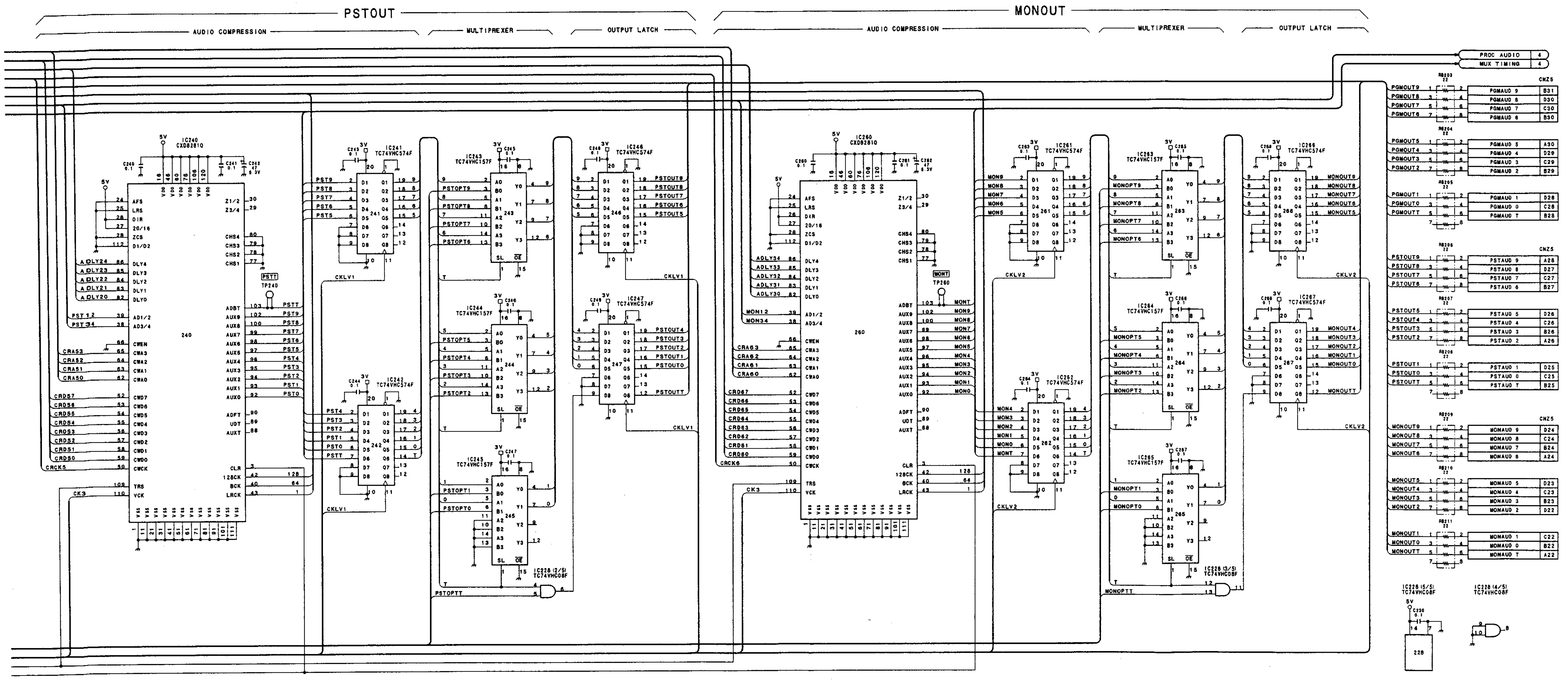

A/V Demultiplex/Multiplex Board
AVD-3 (3/4)
BKDS-M1810
BOARD NO. 1-658-384-11/12
LOT NO. 506-
FOR DVS-M1000C
B-¥SJX053-AVD3

BKDS-M1810 (SY) : S/N 10001 and Higher

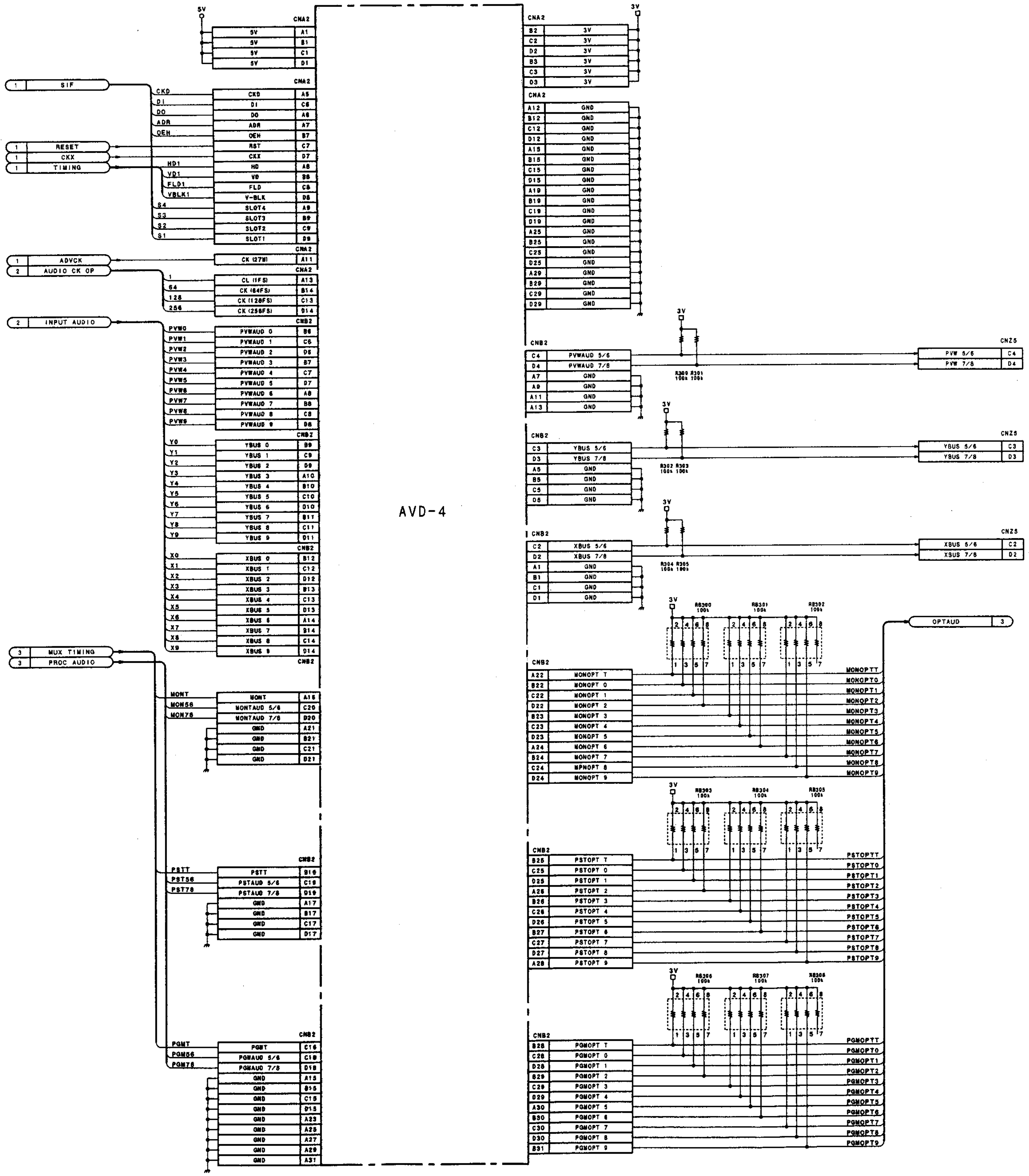

A/V Demultiplex/Multiplex Board
AVD-3 (4/4)
BKDS-M1810
BOARD NO. 1-658-384-11/12
LOT NO. 506-
FOR DVS-M1000C
B-¥SJX053-AVD3

BKDS-M1820 (SY) : S/N 10001 and Higher

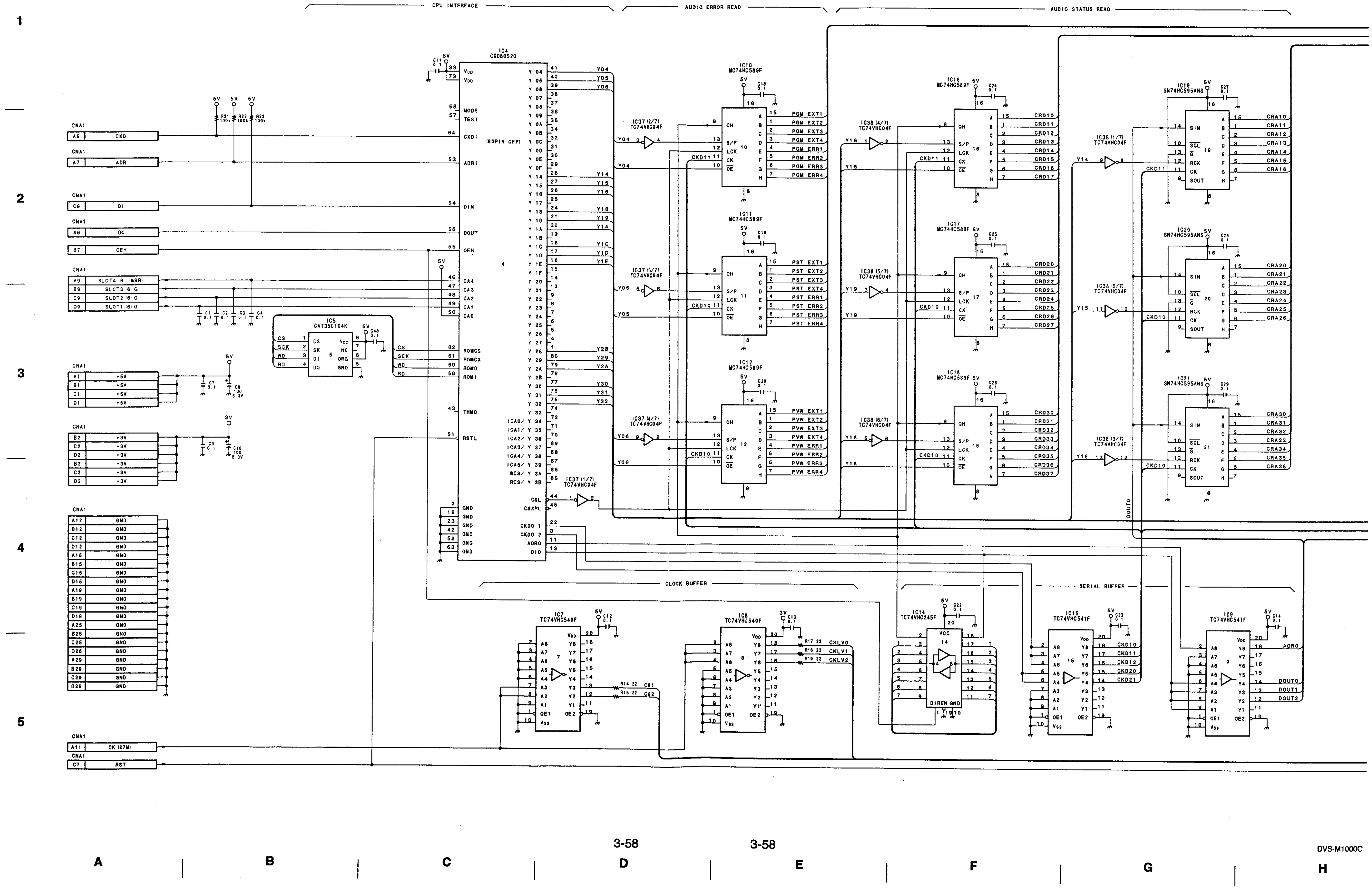

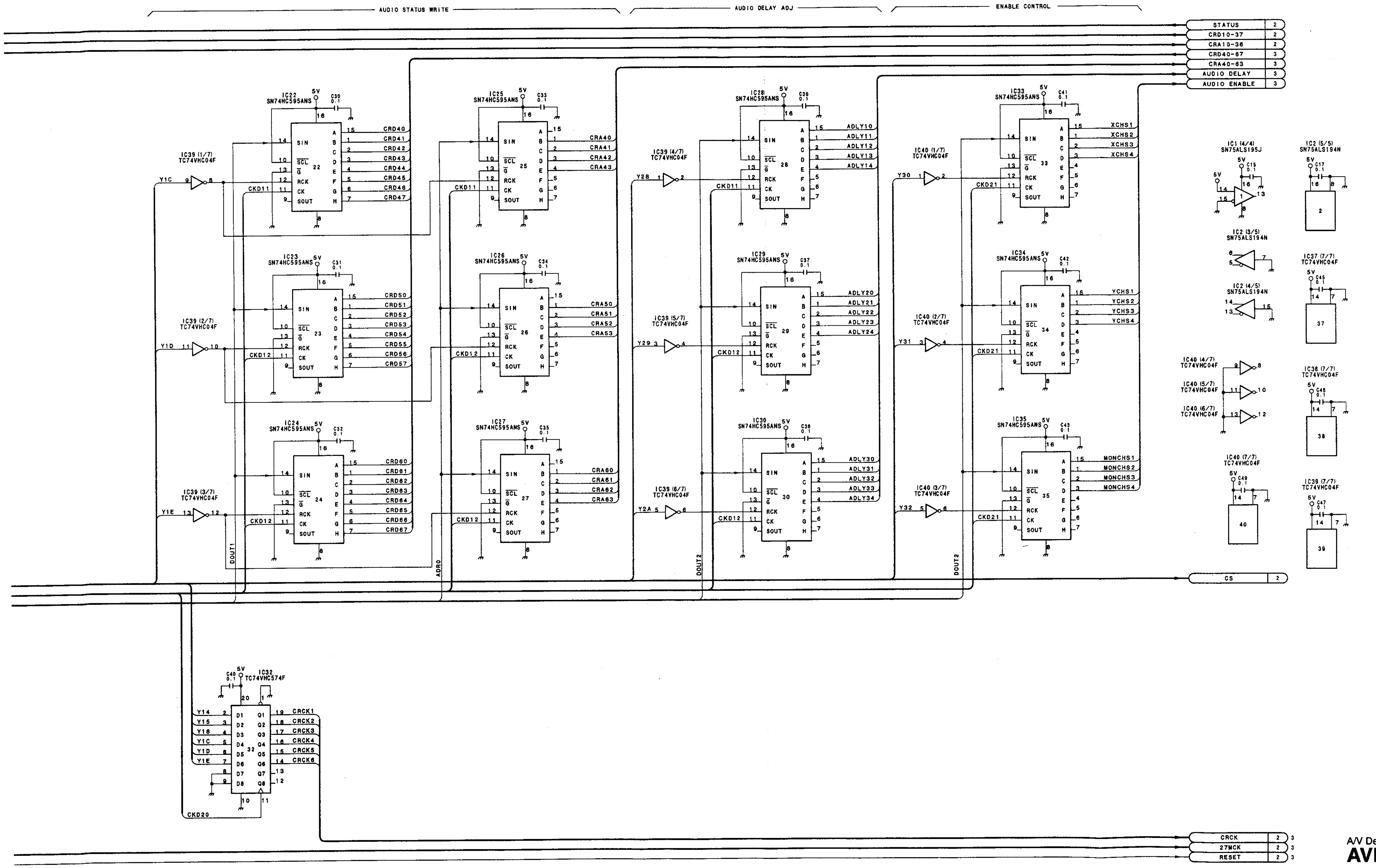

1
2
3
4
5

A/V Demultiplex/Multiplex Board
AVD-4 (1/3)
BKDS-M1820
BOARD NO. 1-658-394-11
LOT NO. 511-
FOR DVS-M1000C
B-¥SJX053-AVD4

BKDS-M1820 (SY) : S/N 10001 and Higher

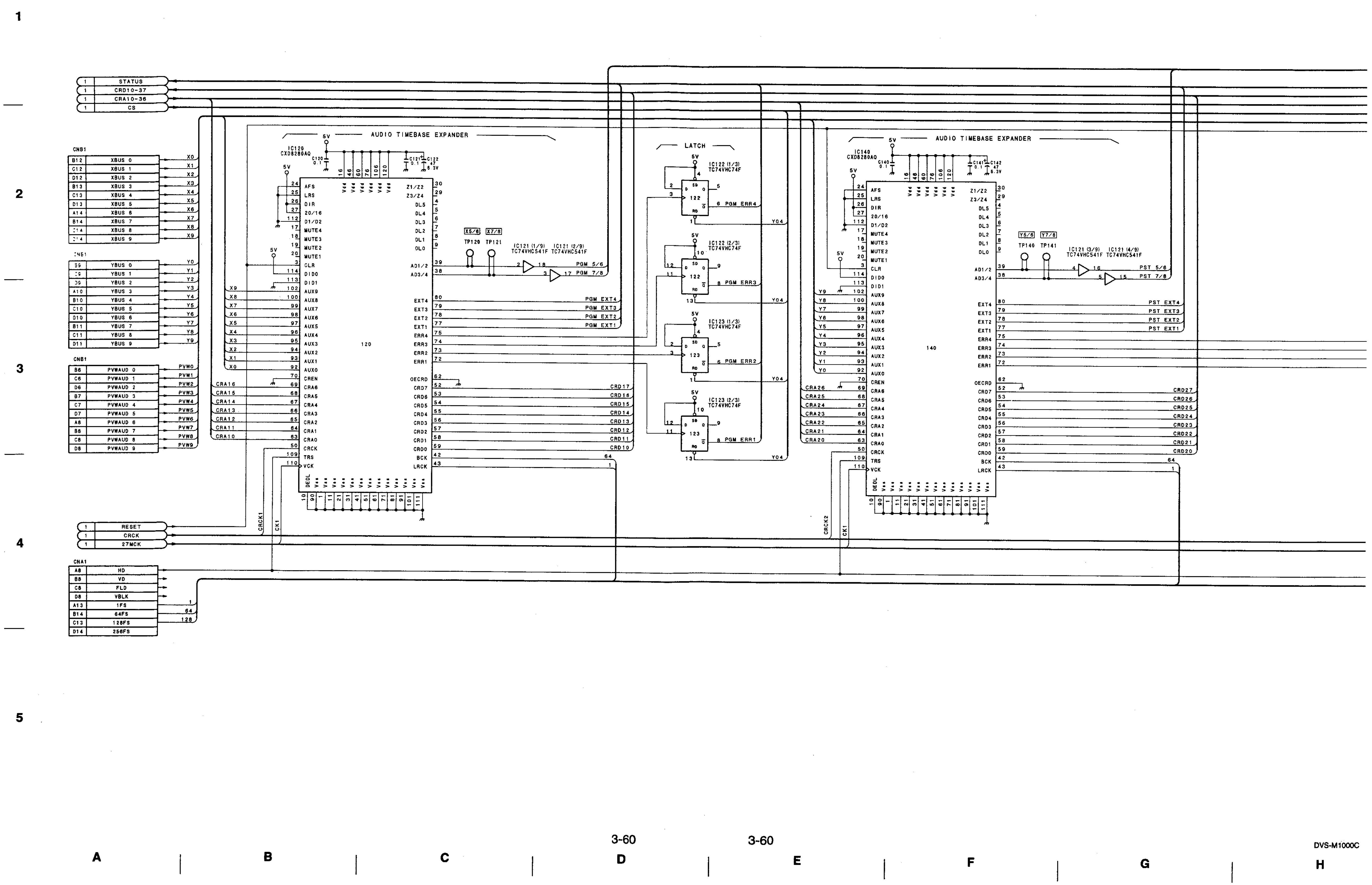

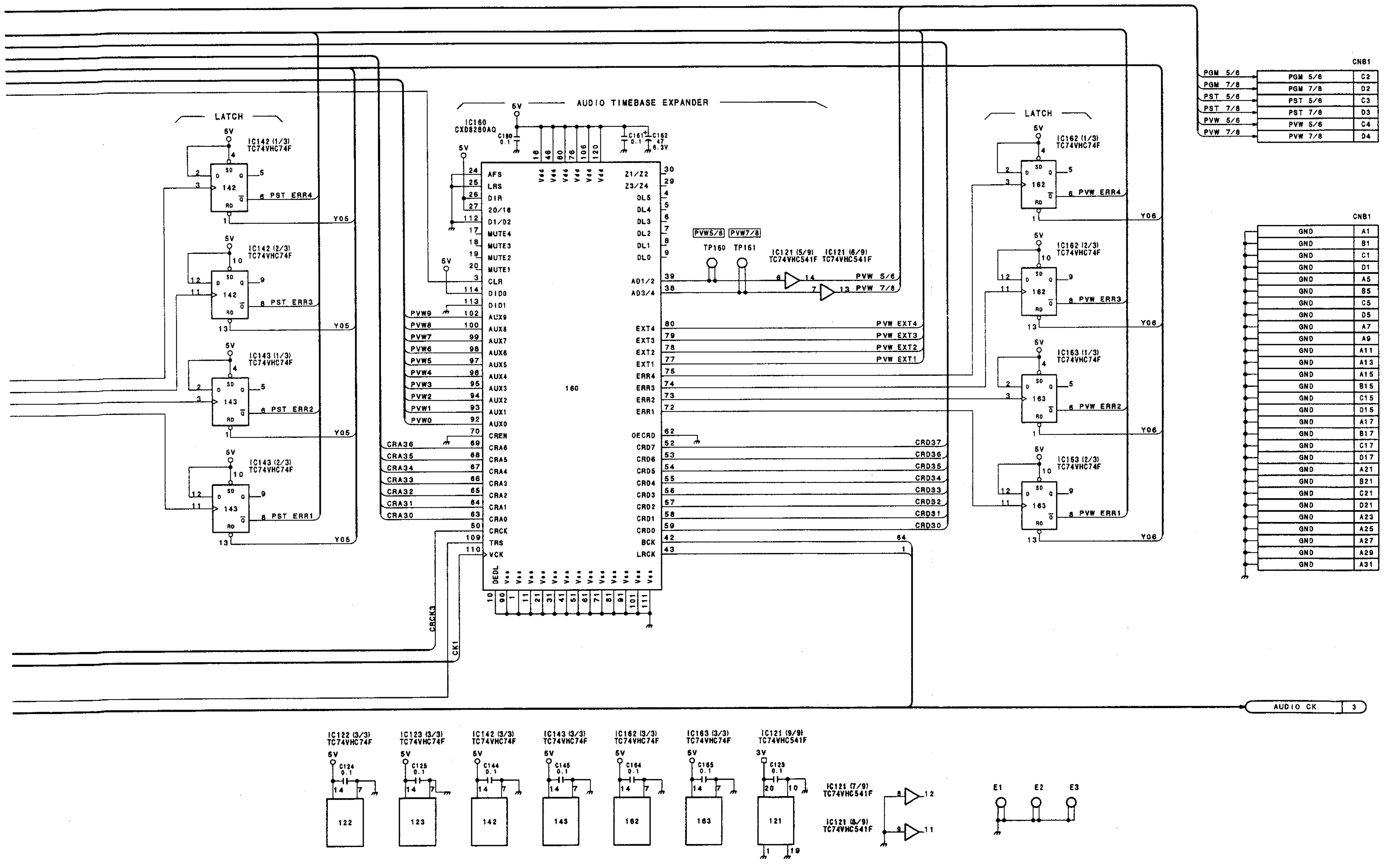

A/V Demultiplex/Multiplex Board
AVD-4 (2/3)
BKDS-M1820
BOARD NO. 1-658-394-11
LOT NO. 511-
FOR DVS-M1000C
B-¥SJX053-AVD4

BKDS-M1820 (SY) : S/N 10001 and Higher

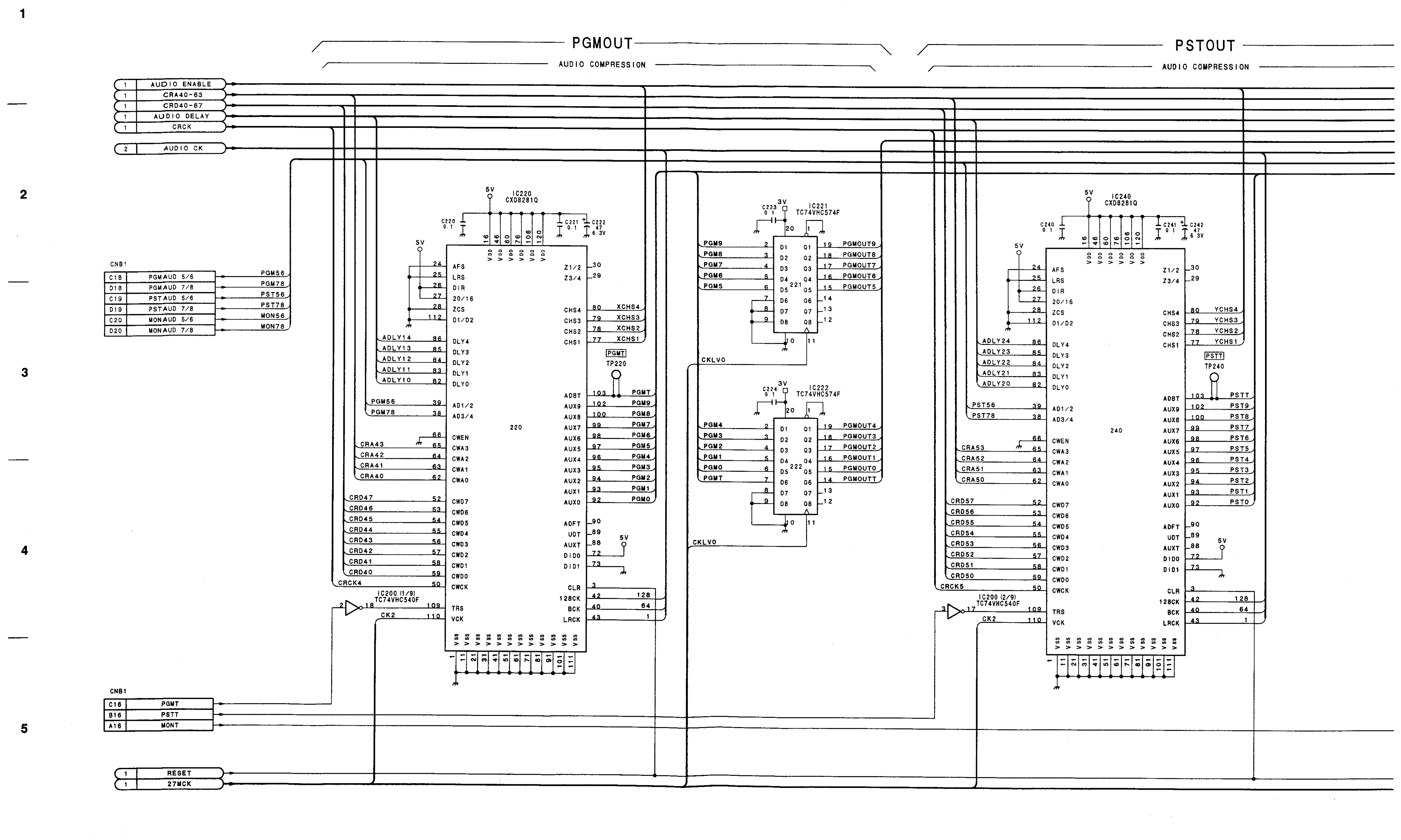

A | B | C | D | E | F | G | H
DVS-M1000C

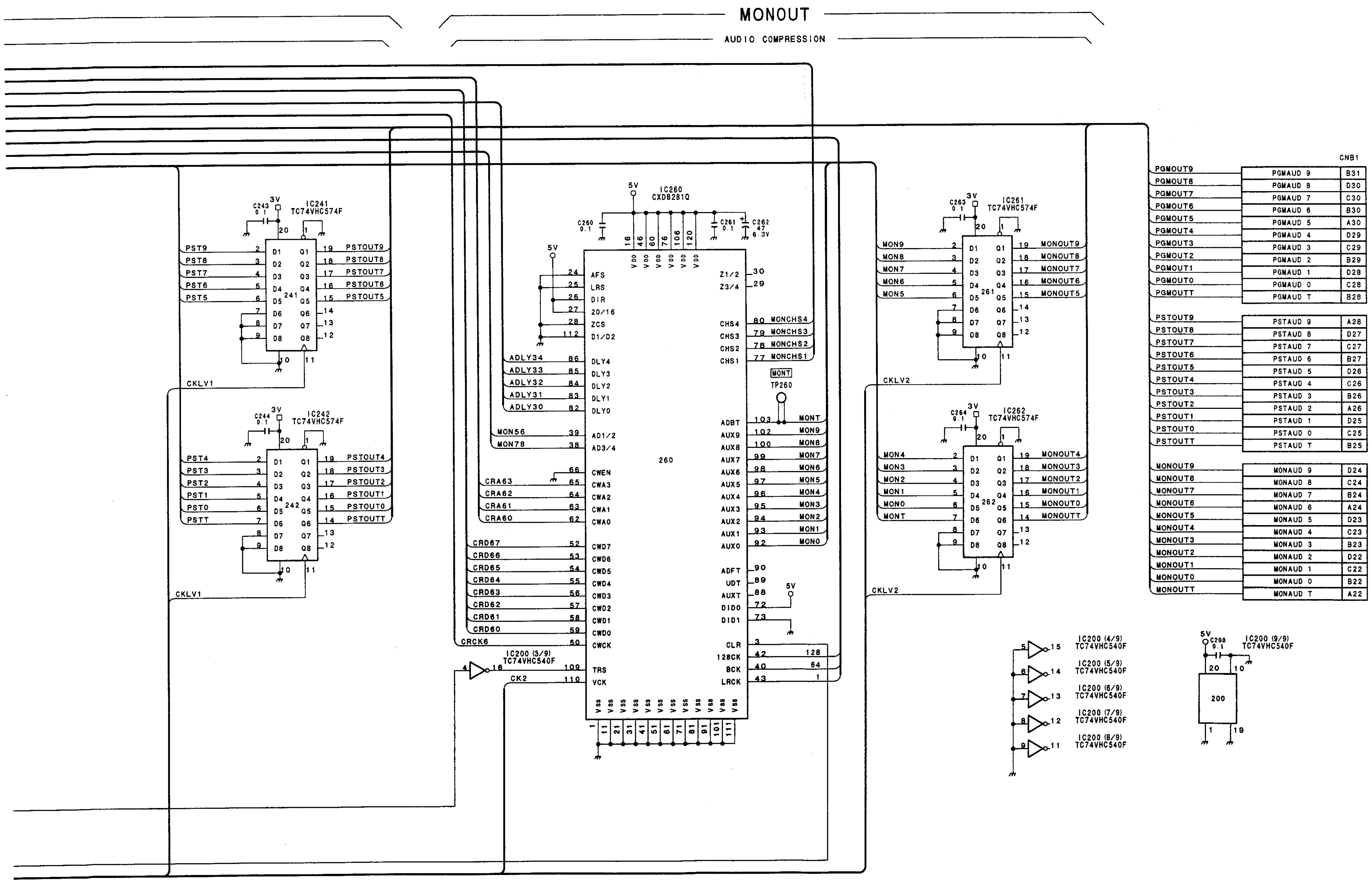

PGMAUD 9	B31
PGMAUD 8	D30
PGMAUD 7	C30
PGMAUD 6	B30
PGMAUD 5	A30
PGMAUD 4	D29
PGMAUD 3	C29
PGMAUD 2	B29
PGMAUD 1	D28
PGMAUD 0	C28
PGMAUD T	B28
PSTAUD 9	A28
PSTAUD 8	D27
PSTAUD 7	C27
PSTAUD 6	B27
PSTAUD 5	D26
PSTAUD 4	C26
PSTAUD 3	B26
PSTAUD 2	A26
PSTAUD 1	D25
PSTAUD 0	C25
PSTAUD T	B25
MONAUD 9	D24
MONAUD 8	C24
MONAUD 7	B24
MONAUD 6	A24
MONAUD 5	D23
MONAUD 4	C23
MONAUD 3	B23
MONAUD 2	D22
MONAUD 1	C22
MONAUD 0	B22
MONAUD T	A22

A/V Demultiplex/Multiplex Board
AVD-4 (3/3)
BKDS-M1820
BOARD NO. 1-658-394-11
LOT NO. 511-
FOR DVS-M1000C
B-¥SJX053-AVD4

BKDS-7270 (SY) : S/N 10001 and Higher

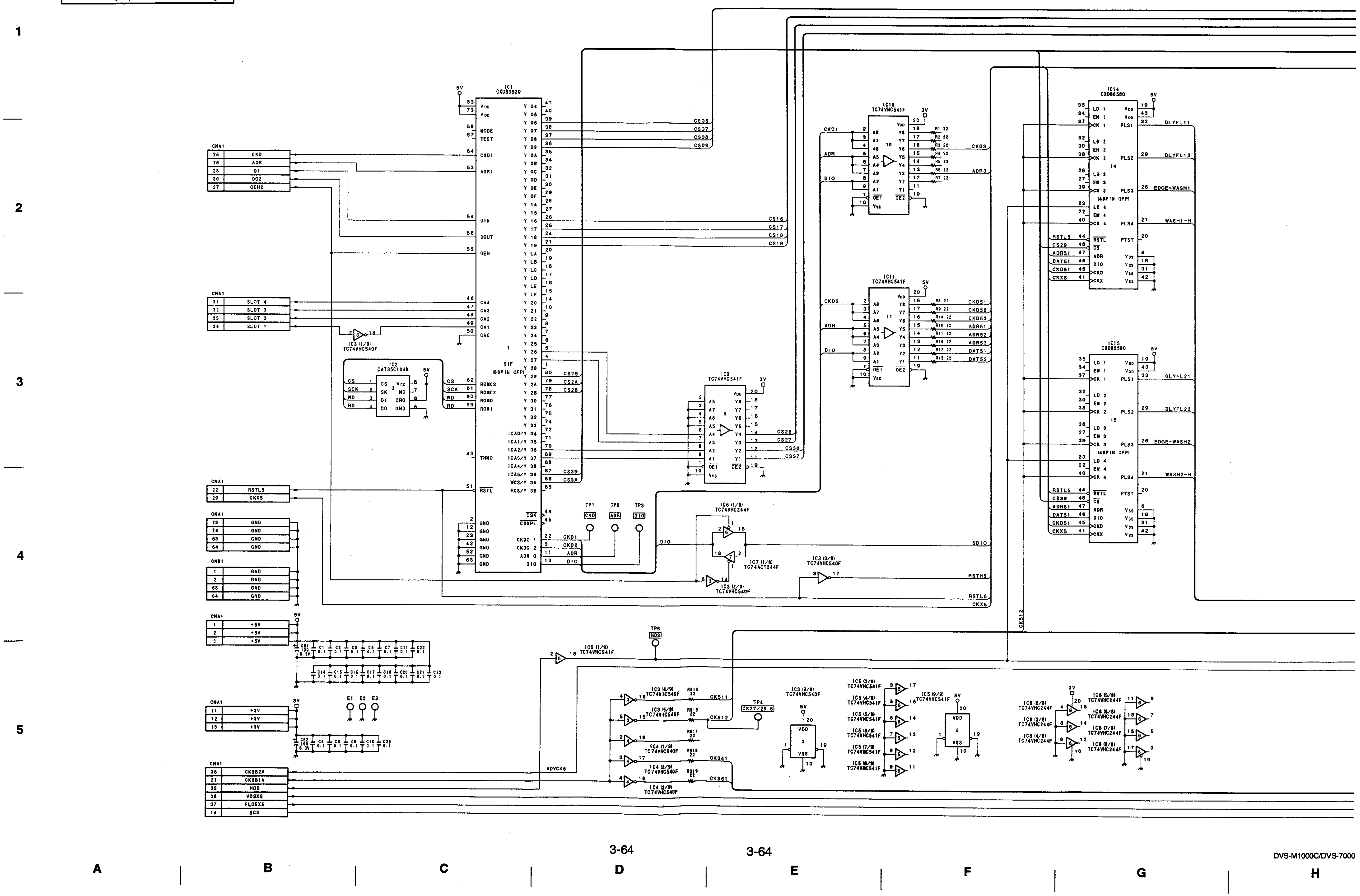

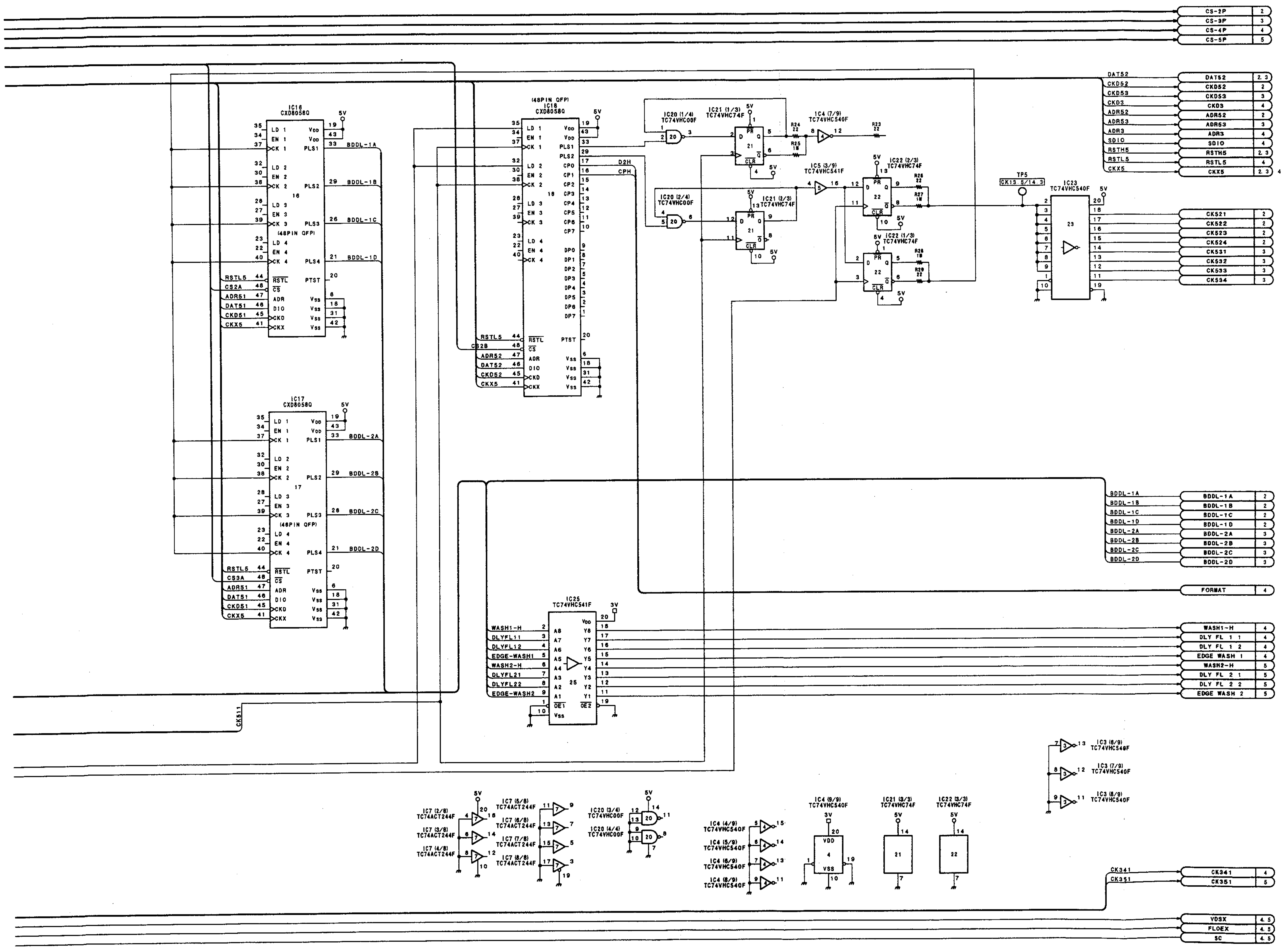

Key Border Board
BD-26 (1/5)
BKDS-7270
BOARD NO. 1-658-398-11
LOT NO. 506-
FOR DVS-M1000C/DVS-7000
B-¥SJX050-BD26

BKDS-7270 (SY) : S/N 10001 and Higher

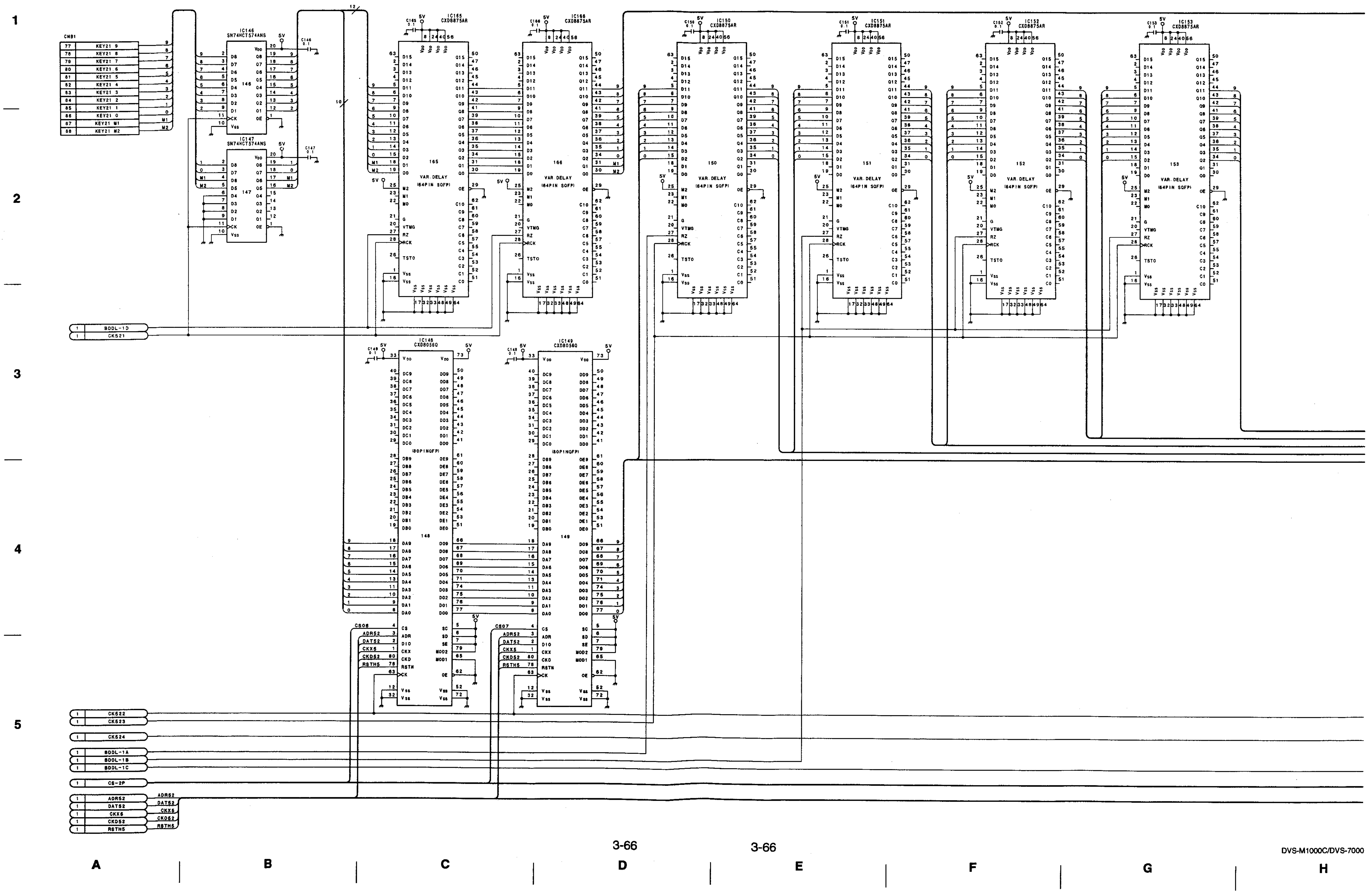

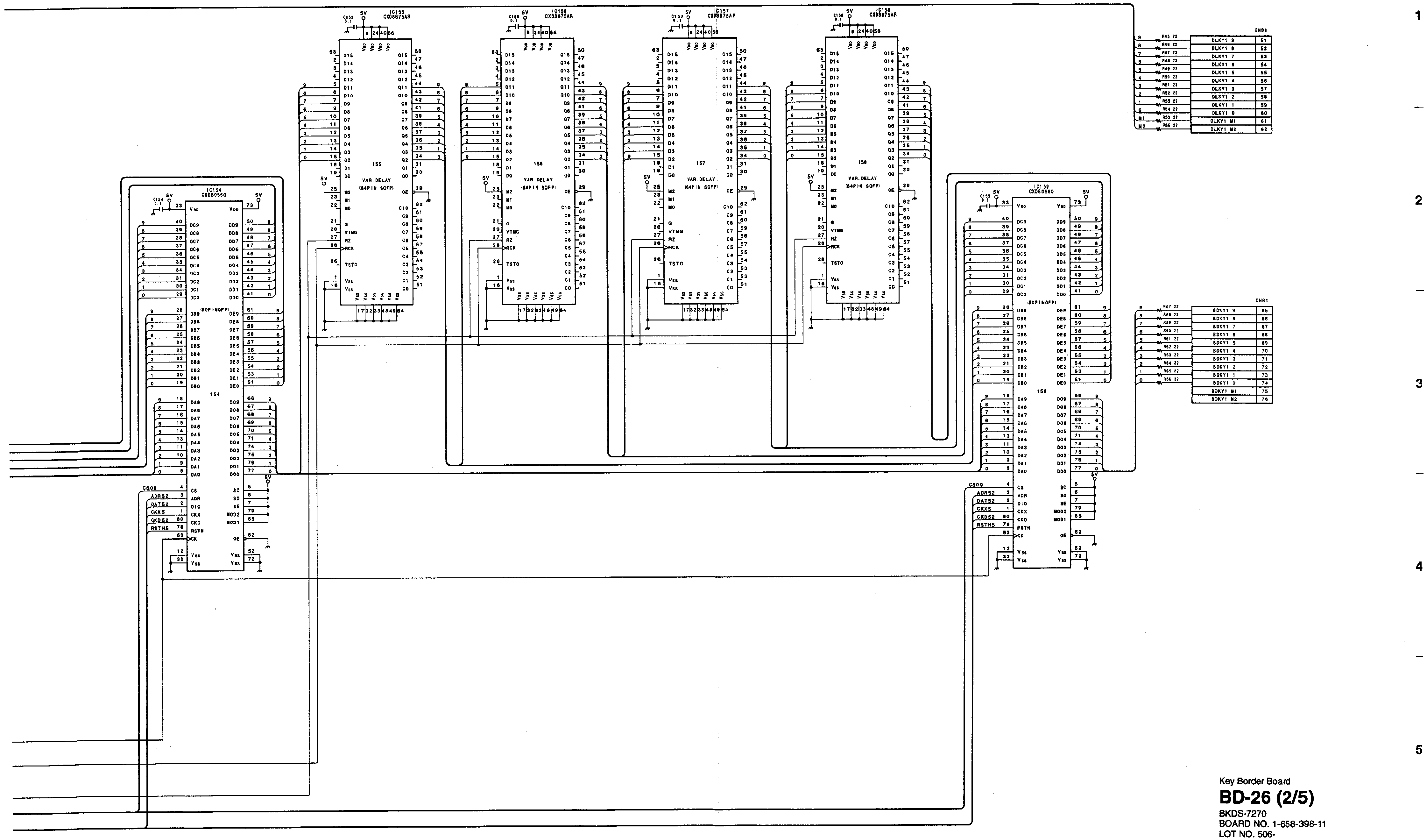

Key Border Board
BD-26 (2/5)
BKDS-7270
BOARD NO. 1-658-398-11
LOT NO. 506-
FOR DVS-M1000C/DVS-7000
B-¥SJX050-BD26

BD-26 (3/5) Key Border Board

BKDS-7270 (SY) : S/N 10001 and Higher

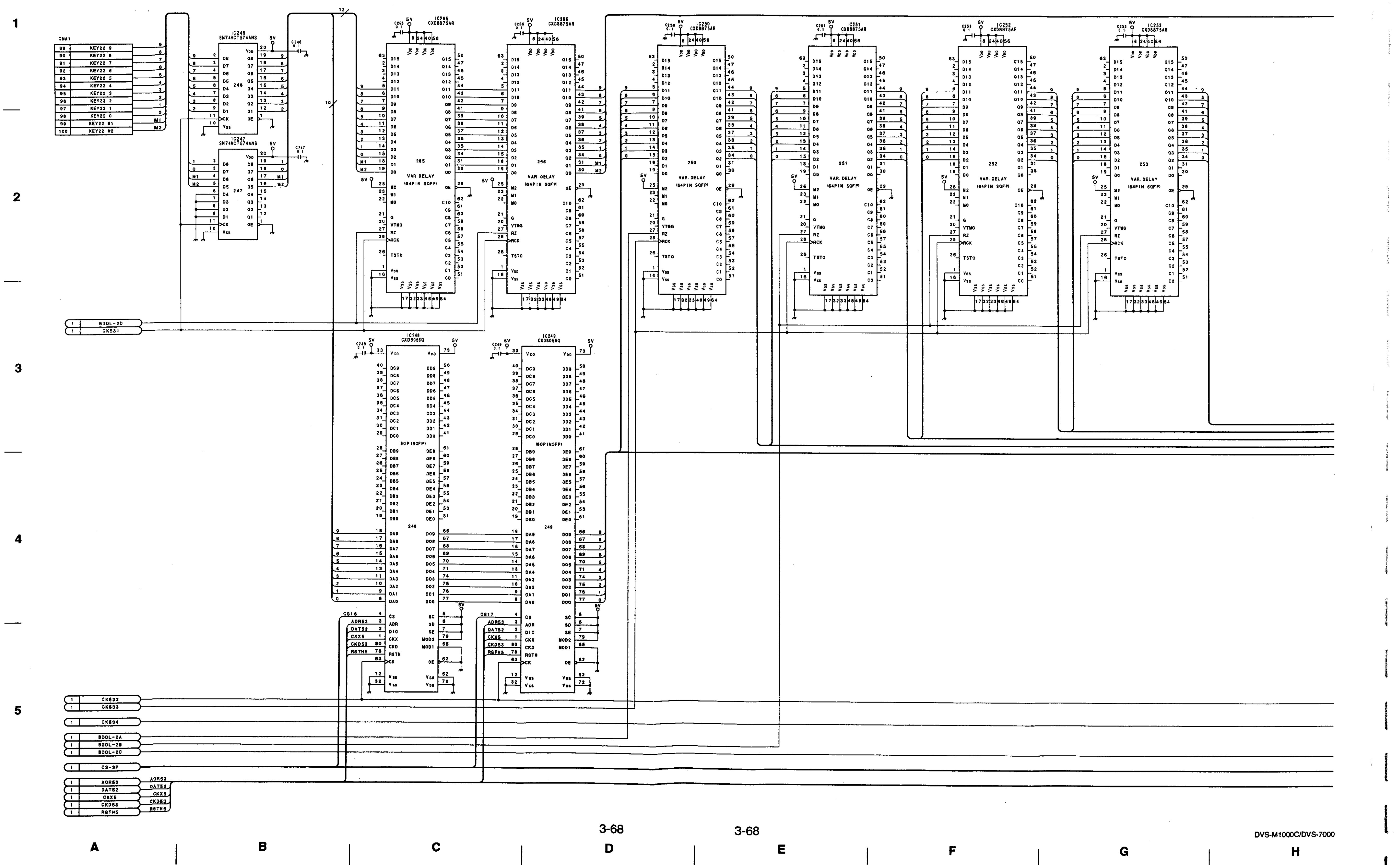

3-68

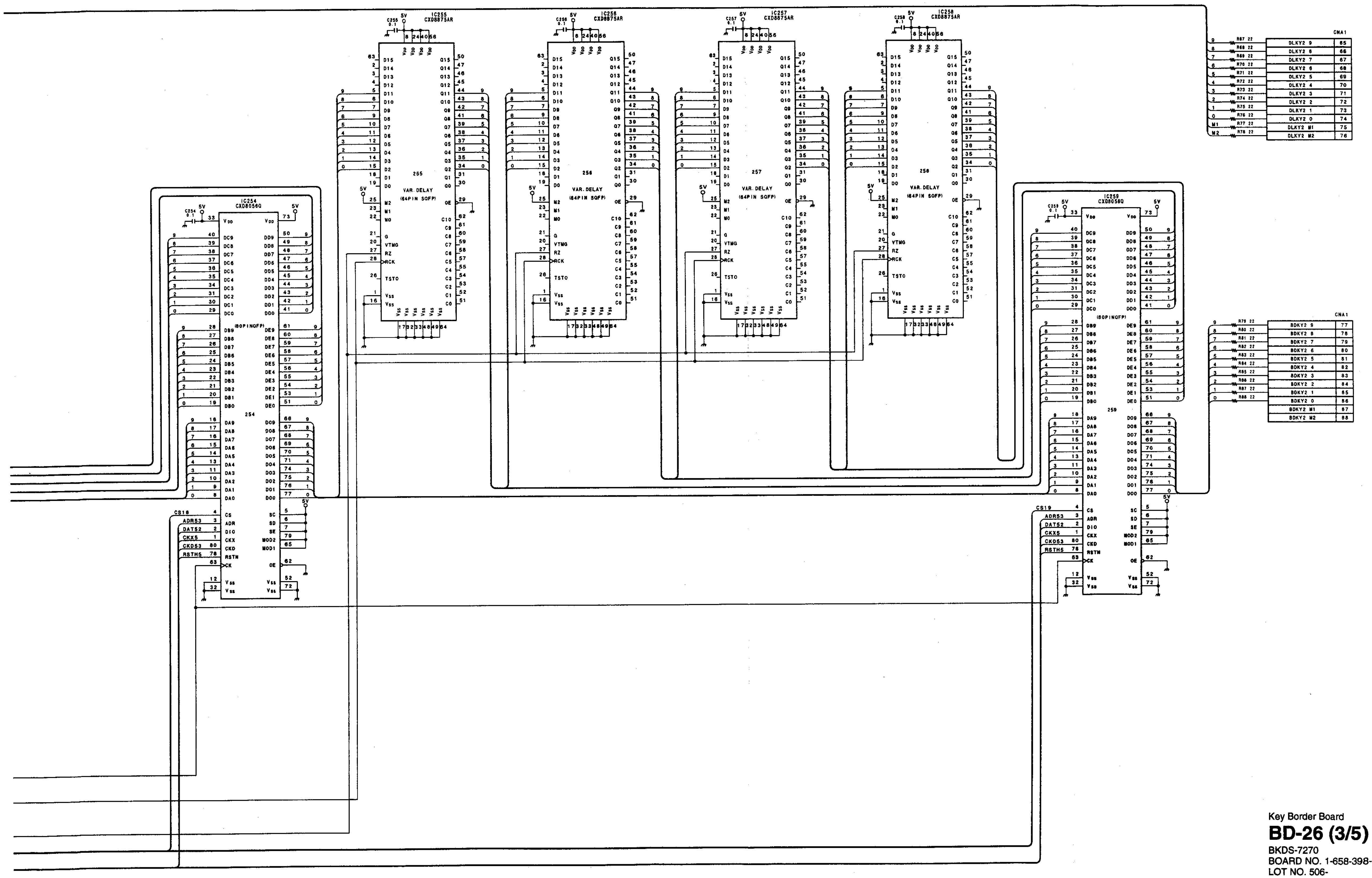

Key Border Board
BD-26 (3/5)
BKDS-7270
BOARD NO. 1-658-398-11
LOT NO. 506-
FOR DVS-M1000C/DVS-7000
B-¥SJX050-BD26

I J K L M N O P

BKDS-7270 (SY) : S/N 10001 and Higher

1

2

3

4

5

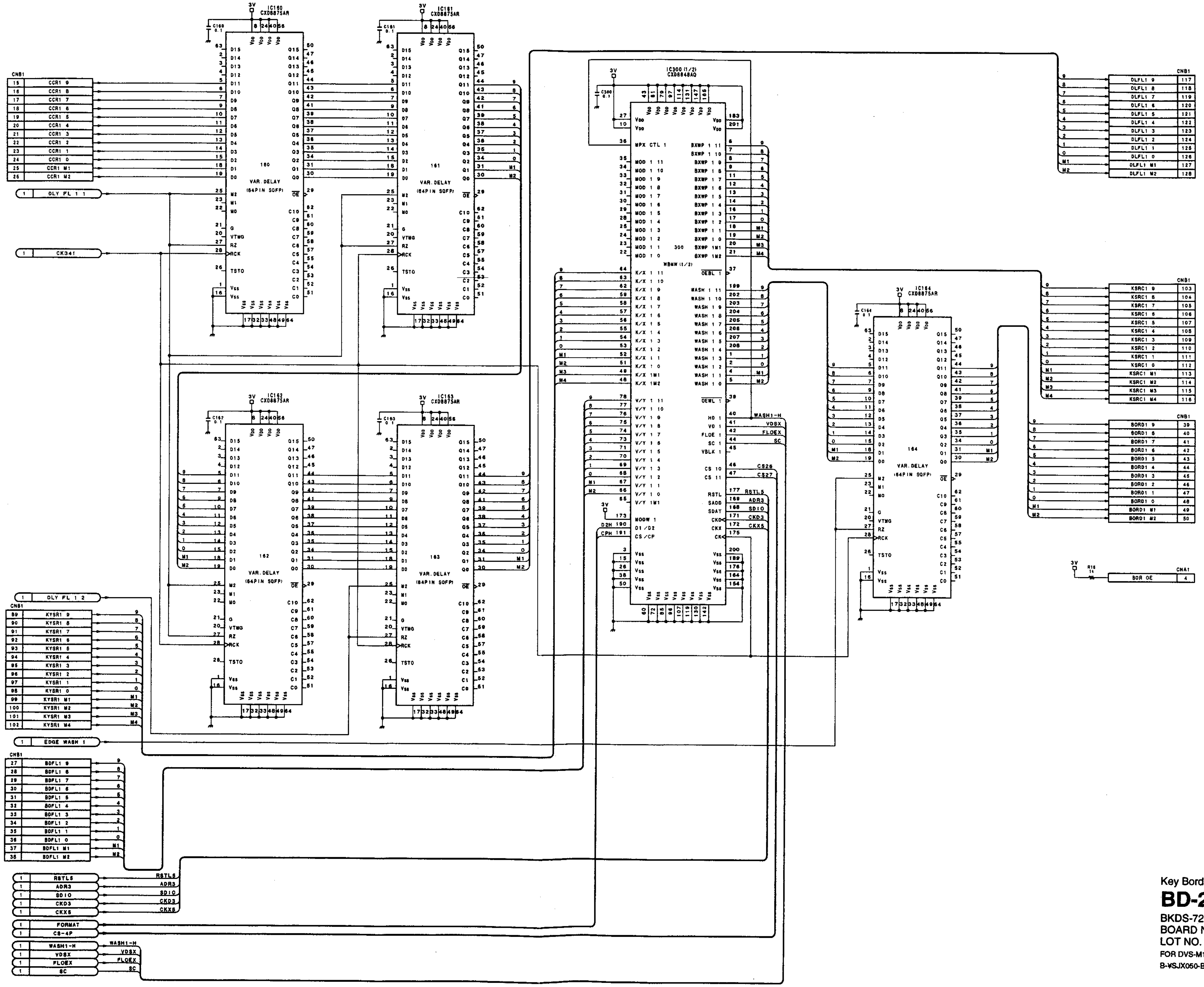

Key Border Board
BD-26 (4/5)
BKDS-7270
BOARD NO. 1-658-398-11
LOT NO. 506-
FOR DVS-M1000C/DVS-7000
B-¥SJX050-BD26

A B C D E F G H

BKDS-7270 (SY) : S/N 10001 and Higher

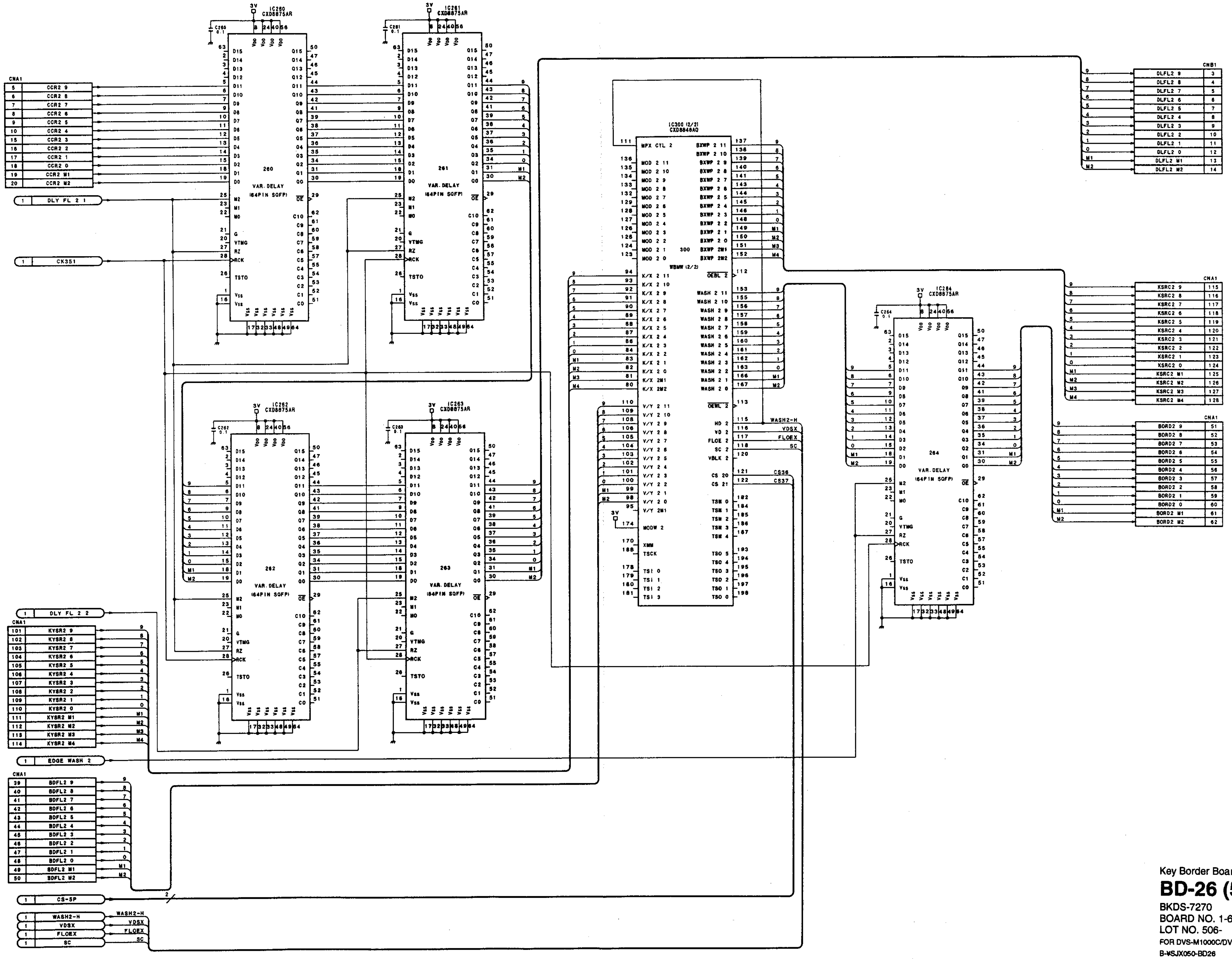

Key Border Board
BD-26 (5/5)
BKDS-7270
BOARD NO. 1-658-398-11
LOT NO. 506-
FOR DVS-M1000C/DVS-7000
B-¥SJX050-BD26

A B C D E F G H

Connector Board **CN-1140**

CN-1140 Connector Board

DVS-M1000C (SY) : S/N 10001 and Higher

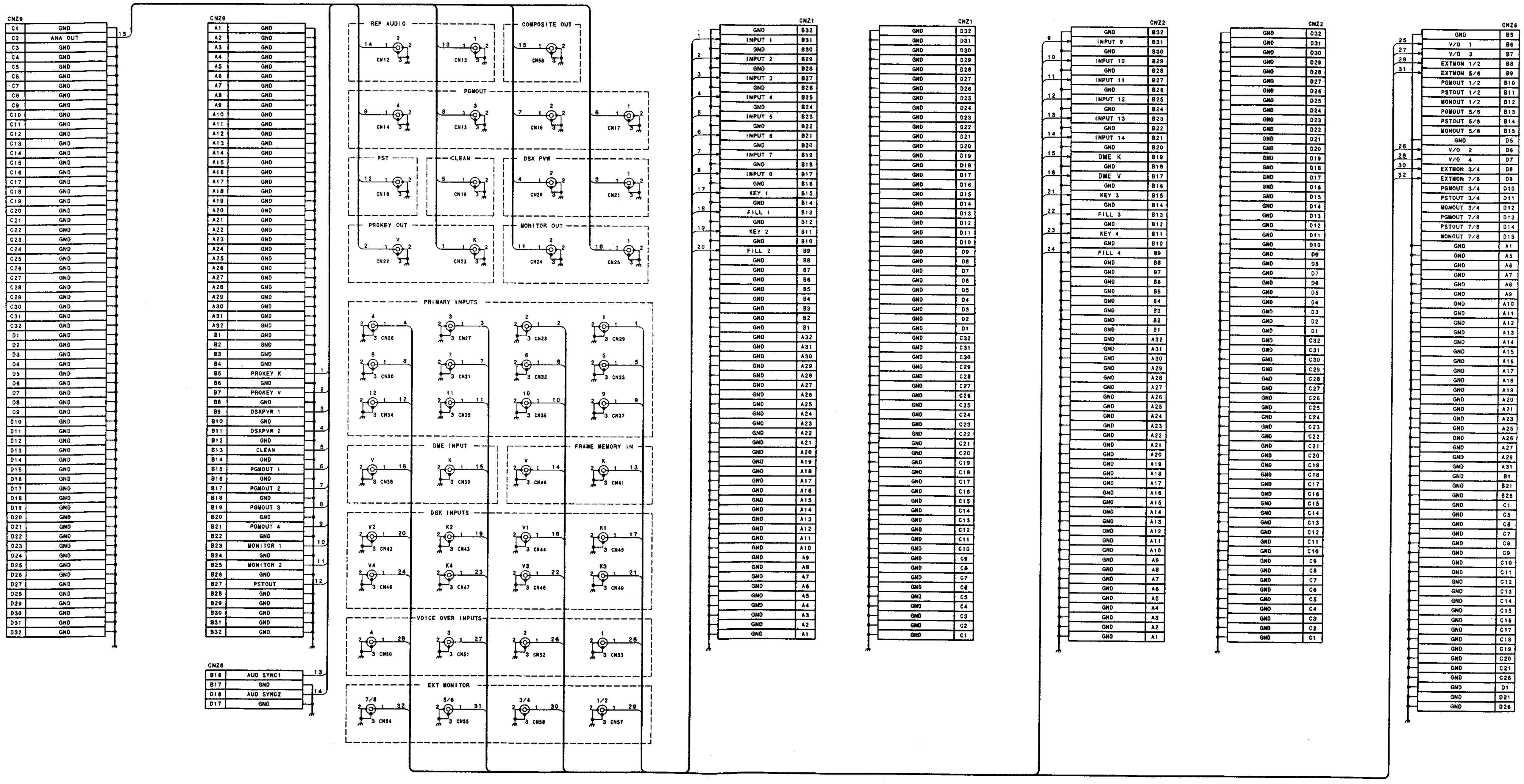

1 2 3 4 5

A B C D E F G H

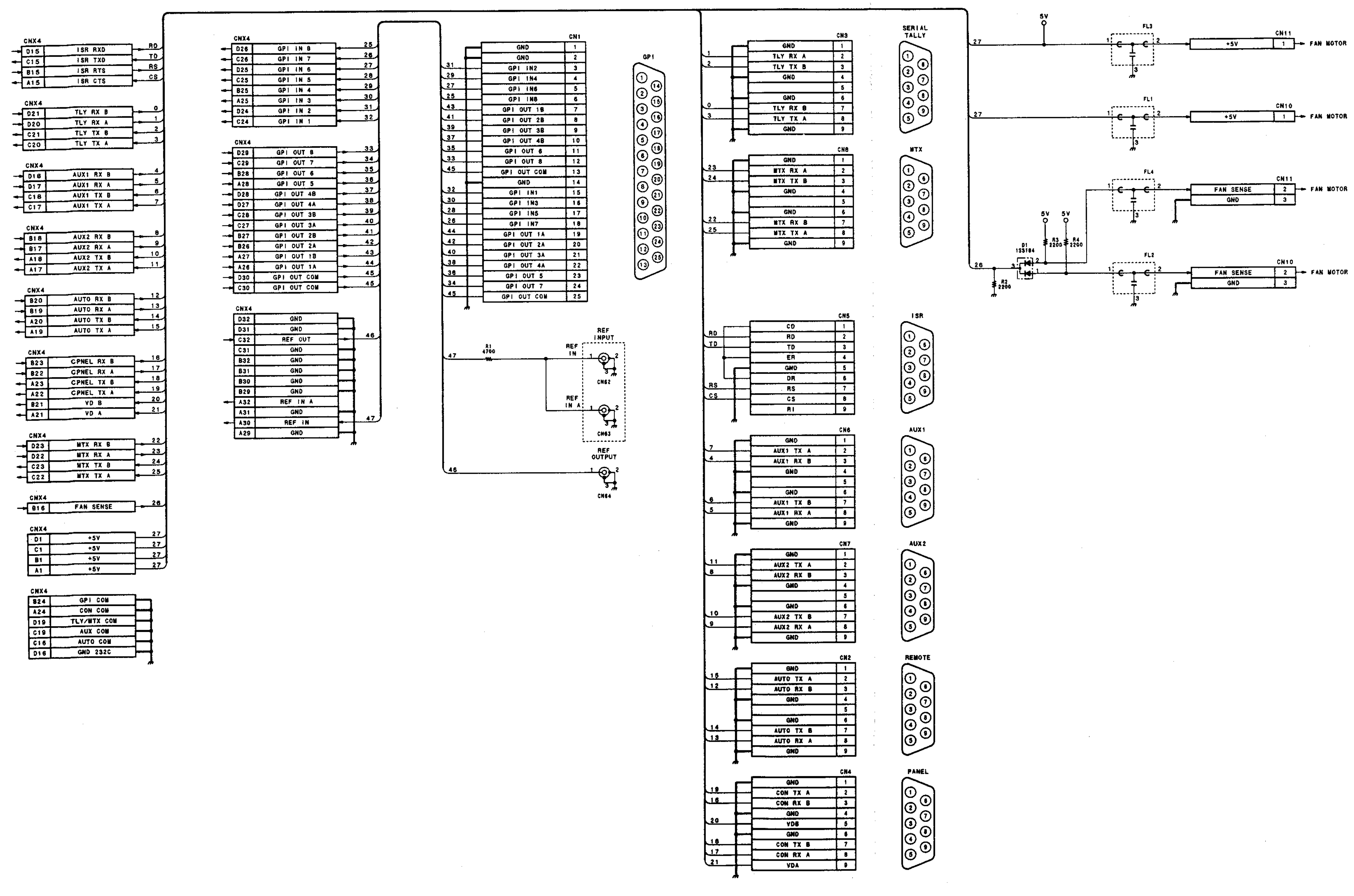

Connector Board
CN-1140
DVS-M1000C
BOARD NO. 1-658-389-11
LOT NO 506-
B-¥SJX053-CN1140

BKDS-7011/7012/7021/7022/7023	(SY) : S/N 10001 and Higher
BKDS-7011R/7012R/7021R/7022R/7023R	(SY) : S/N 10001 and Higher
BKDS-7011LR/7012LR/7021LR/7022LR/7023LR	(SY) : S/N 10001 and Higher

1

2

3

4

5

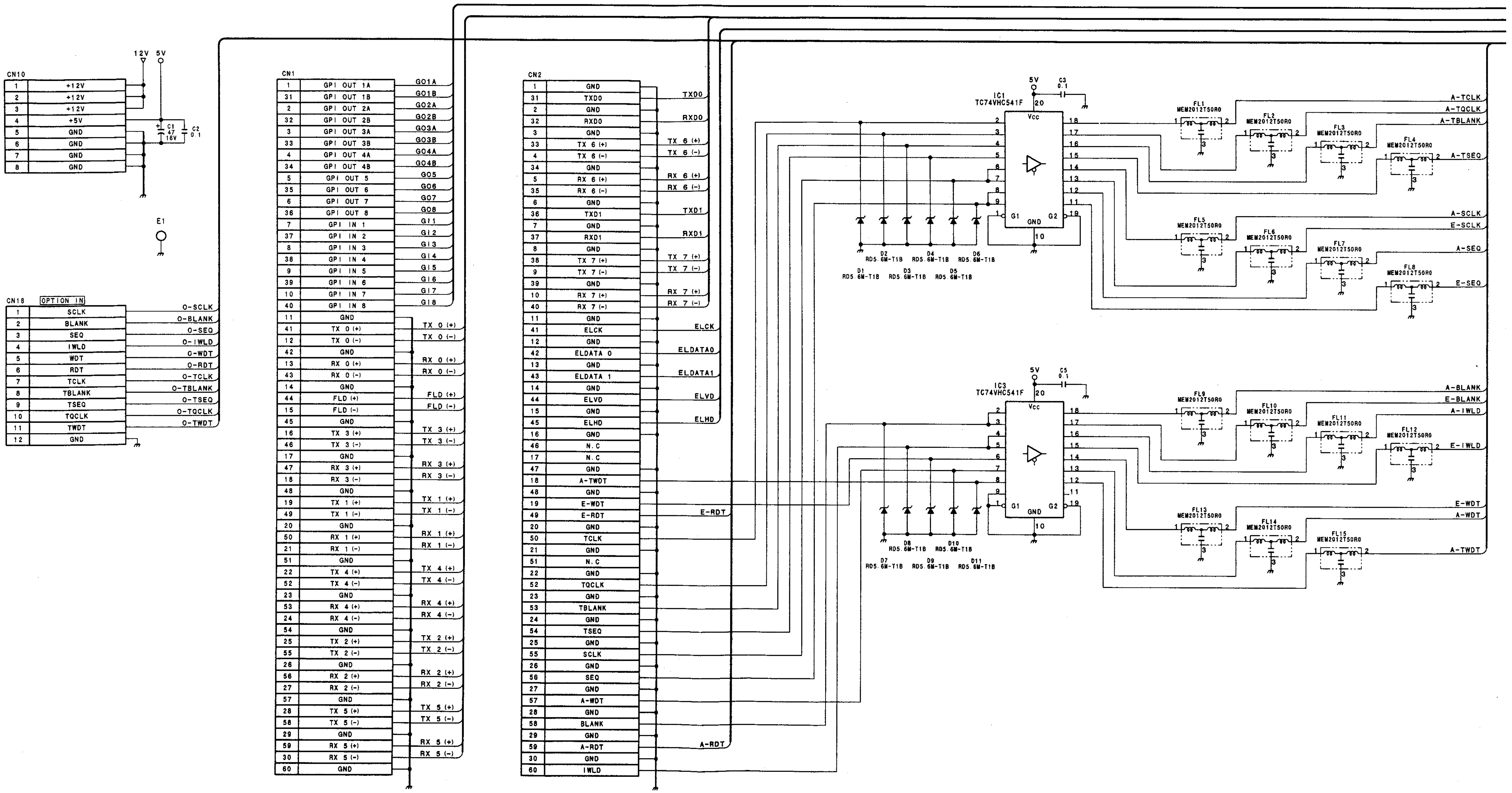

A | B | C | D | E | F | G | H

1

2

3

4

5

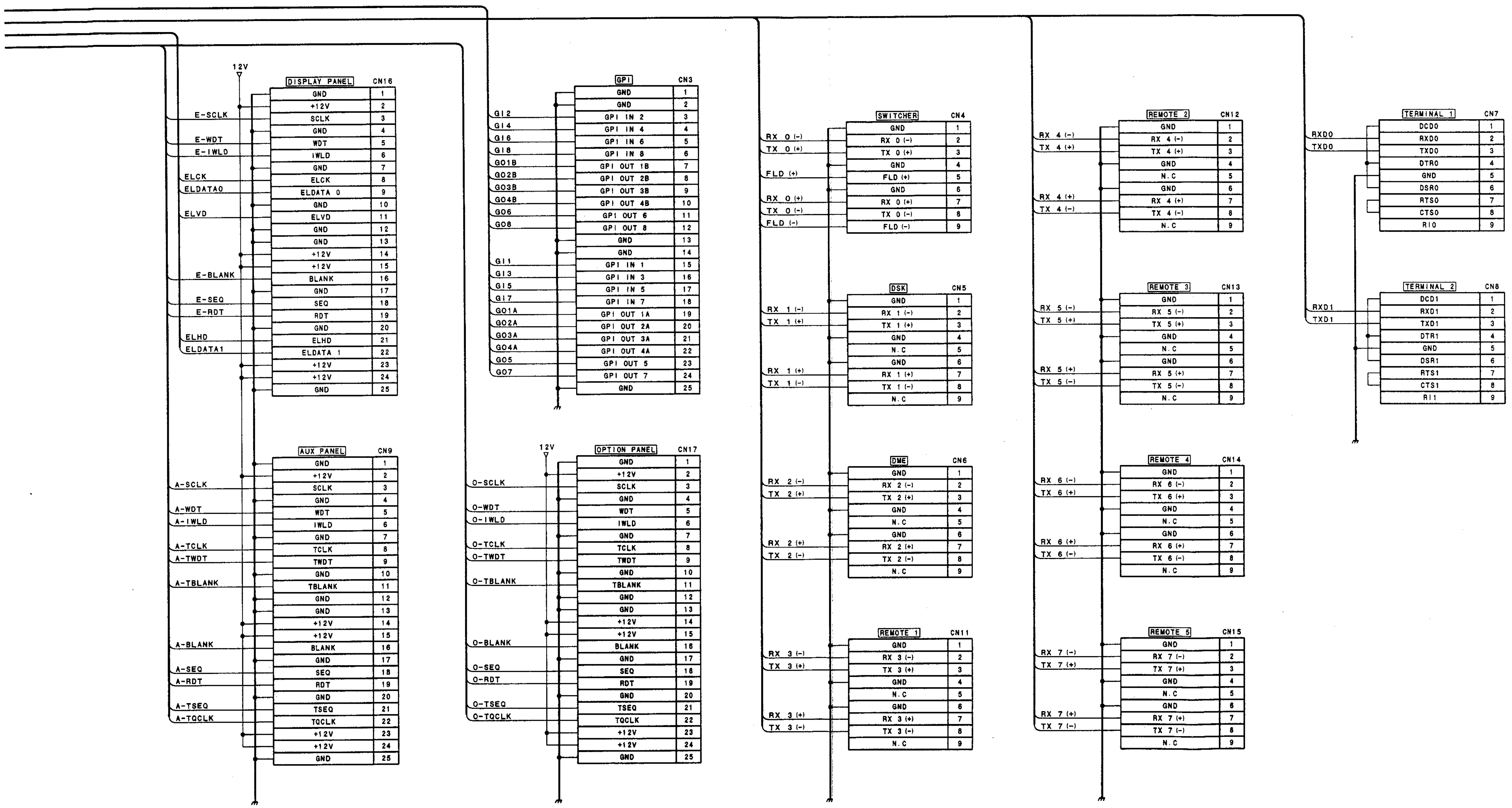

Connector Board
CN-1143
BKDS-7011/7012/7021/7022/7023
BKDS-70xxR/70xxLR
BOARD NO. 1-658-283-11
BKDS-7011/7021/7022 : LOT NO. 505-
BKDS-7012 : LOT NO. 511-
BKDS-7023 : LOT NO. 509-
BKDS-70xxR/70xxLR : LOT NO. 601-
B-¥SJXA076-CN1143

DVS-7000 (SY) : S/N 10001 and Higher

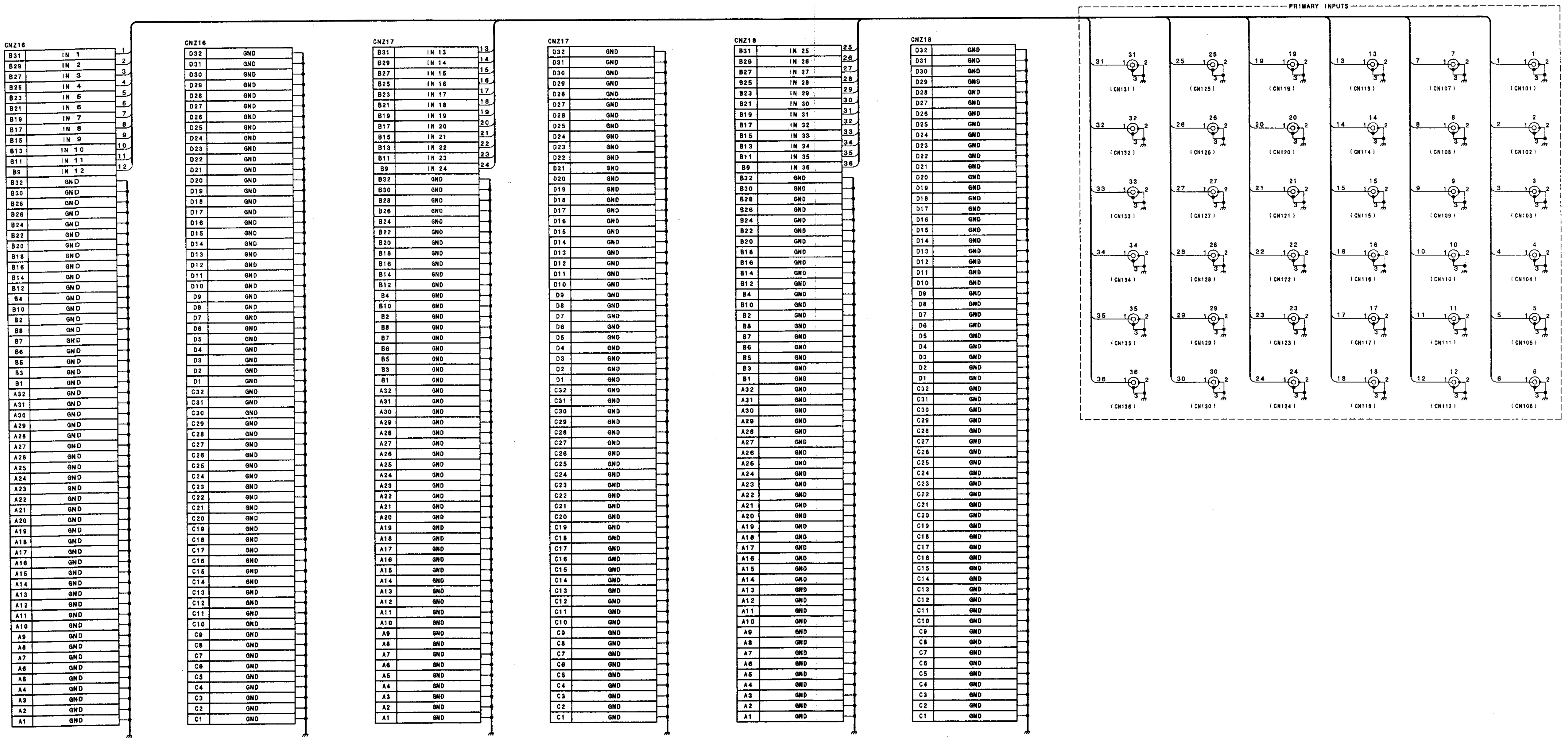

Connector Board
CN-1145 (1/2)
DVS-7000
BOARD NO. 1-658-400-11/12
LOT NO. 507-
B-¥SJX050-CN1145

A B C D E F G H

1 2 3 4 5

CN-1145 (2/2) Connector Board

DVS-7000 (SY) : S/N 10001 and Higher

1

2

3

4

5

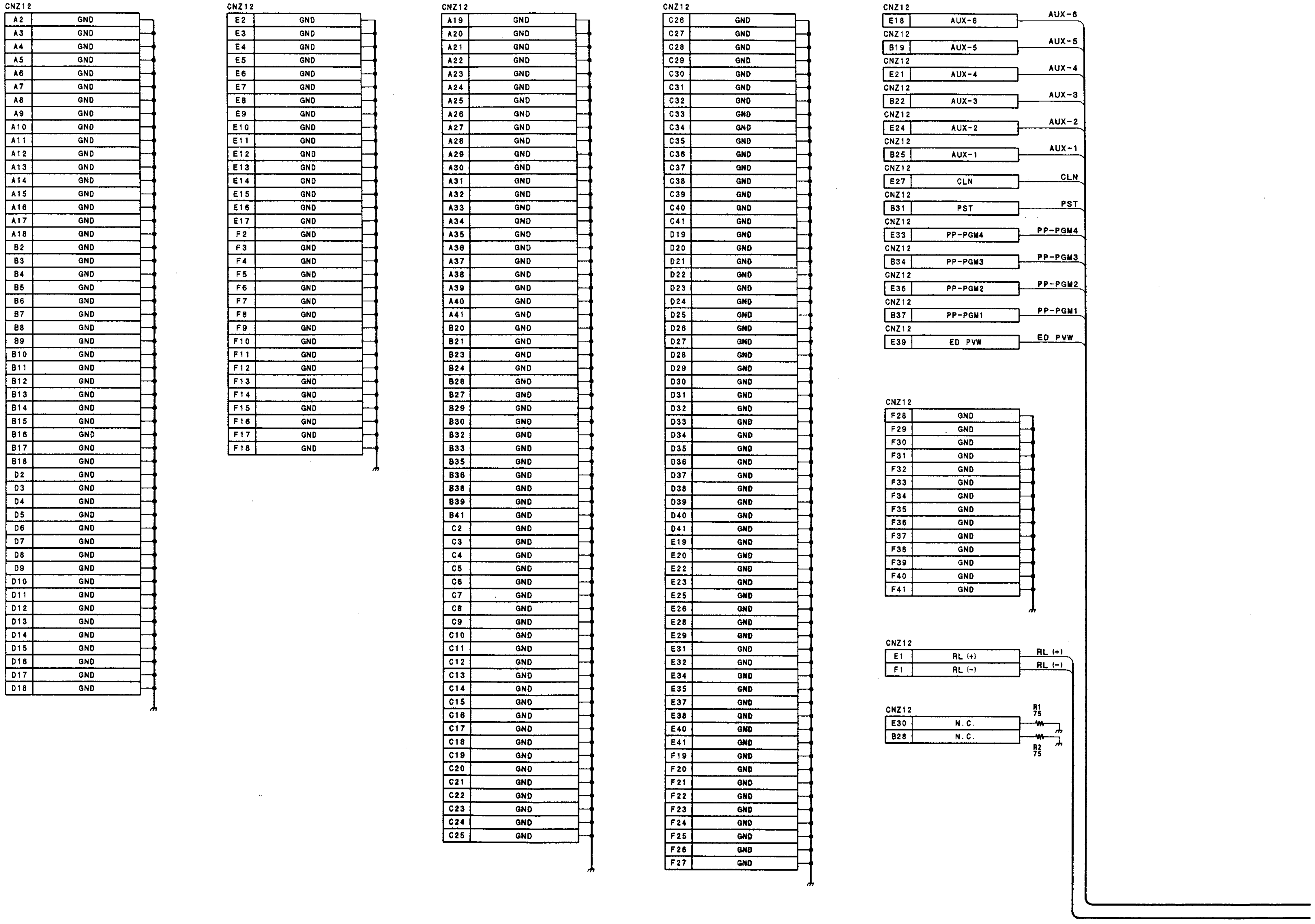

3-78

A | B | C | D | E | F | G | H

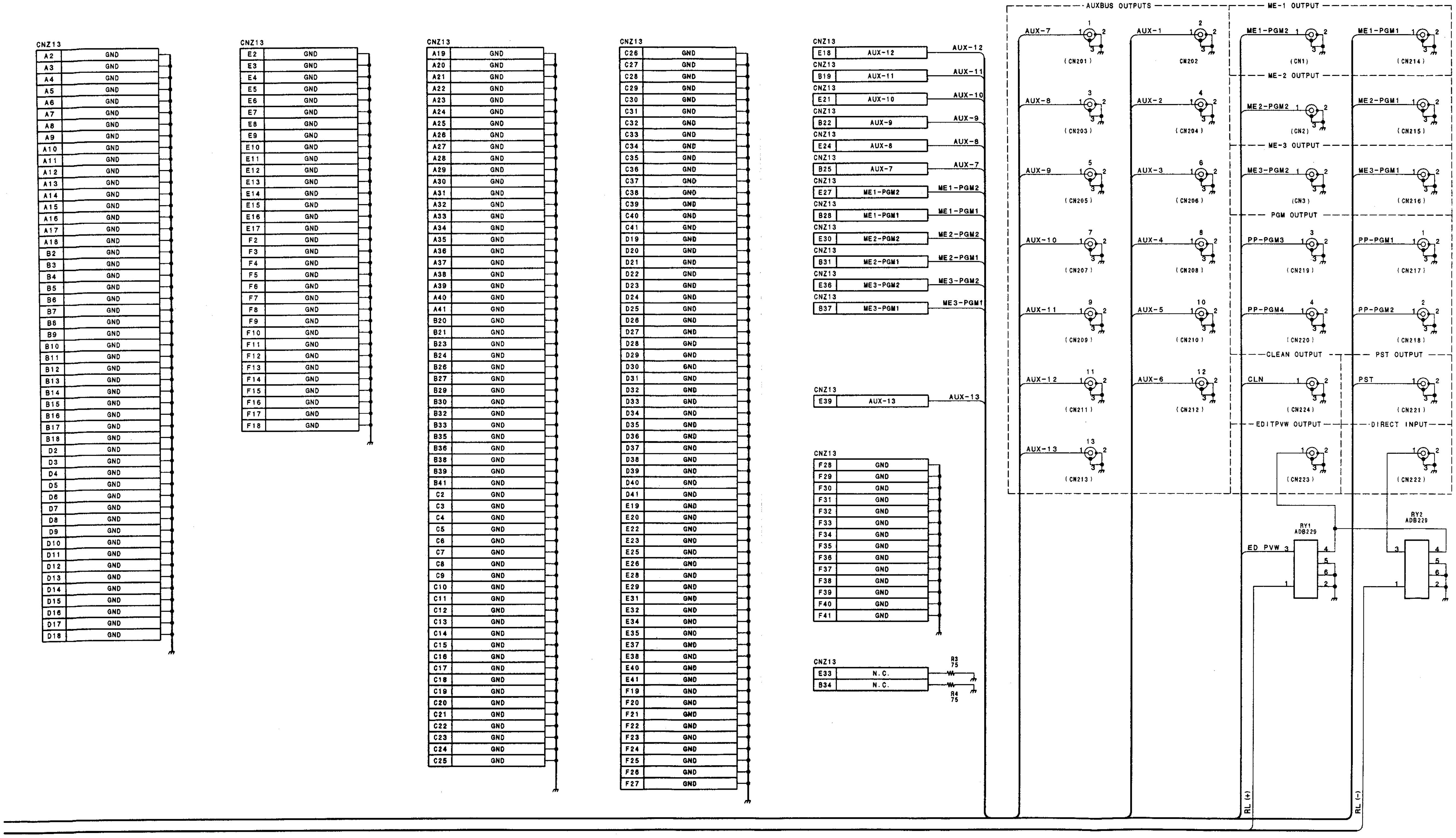

Connector Board
CN-1145 (2/2)
DVS-7000
BOARD NO. 1-658-400-11/12
LOT NO. 507-
B-¥SJX050-CN1145

DVS-7000 (SY) : S/N 10001 and Higher

1

2

3

4

5

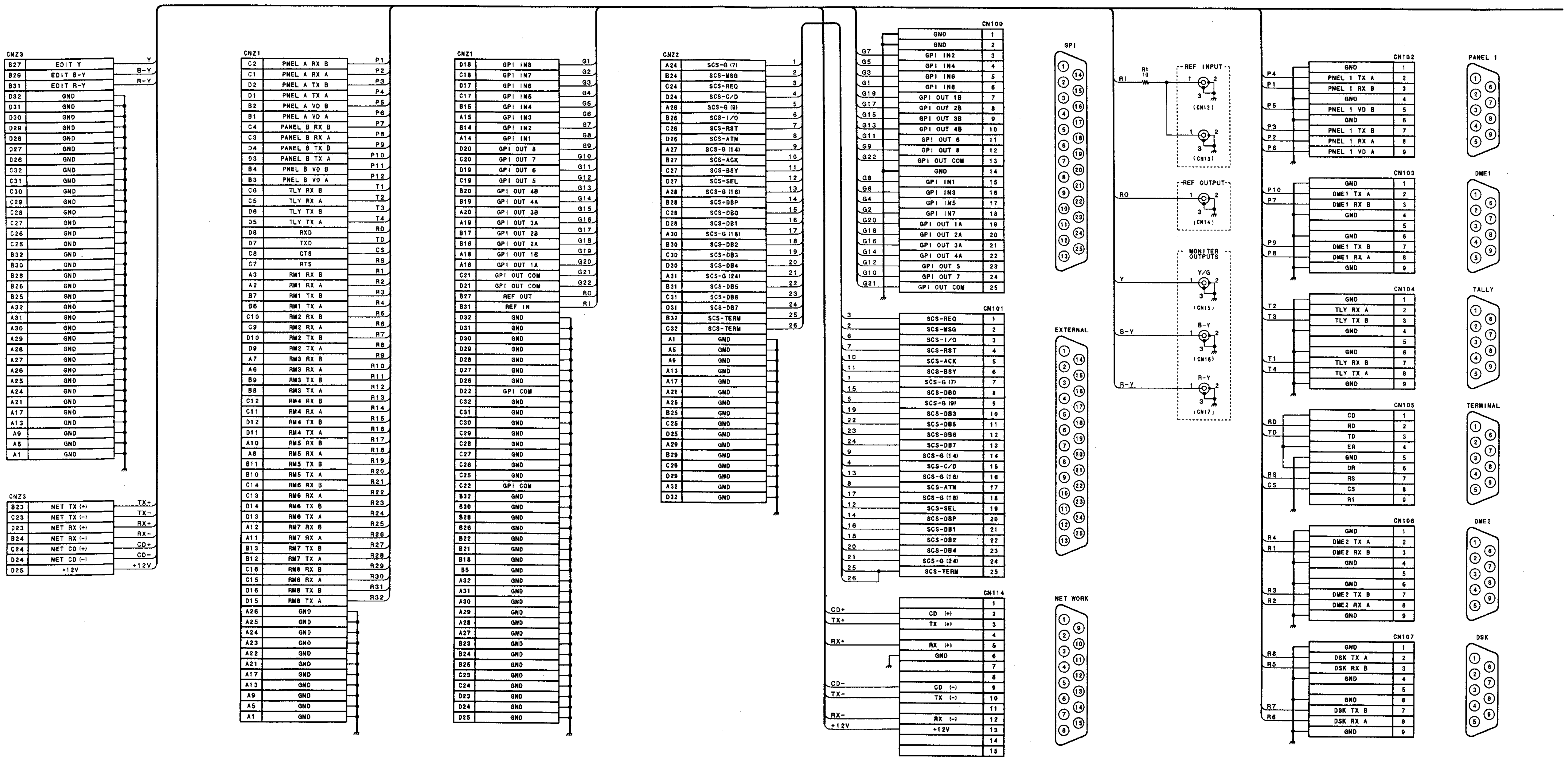

A | B | C | D | E | F | G | H

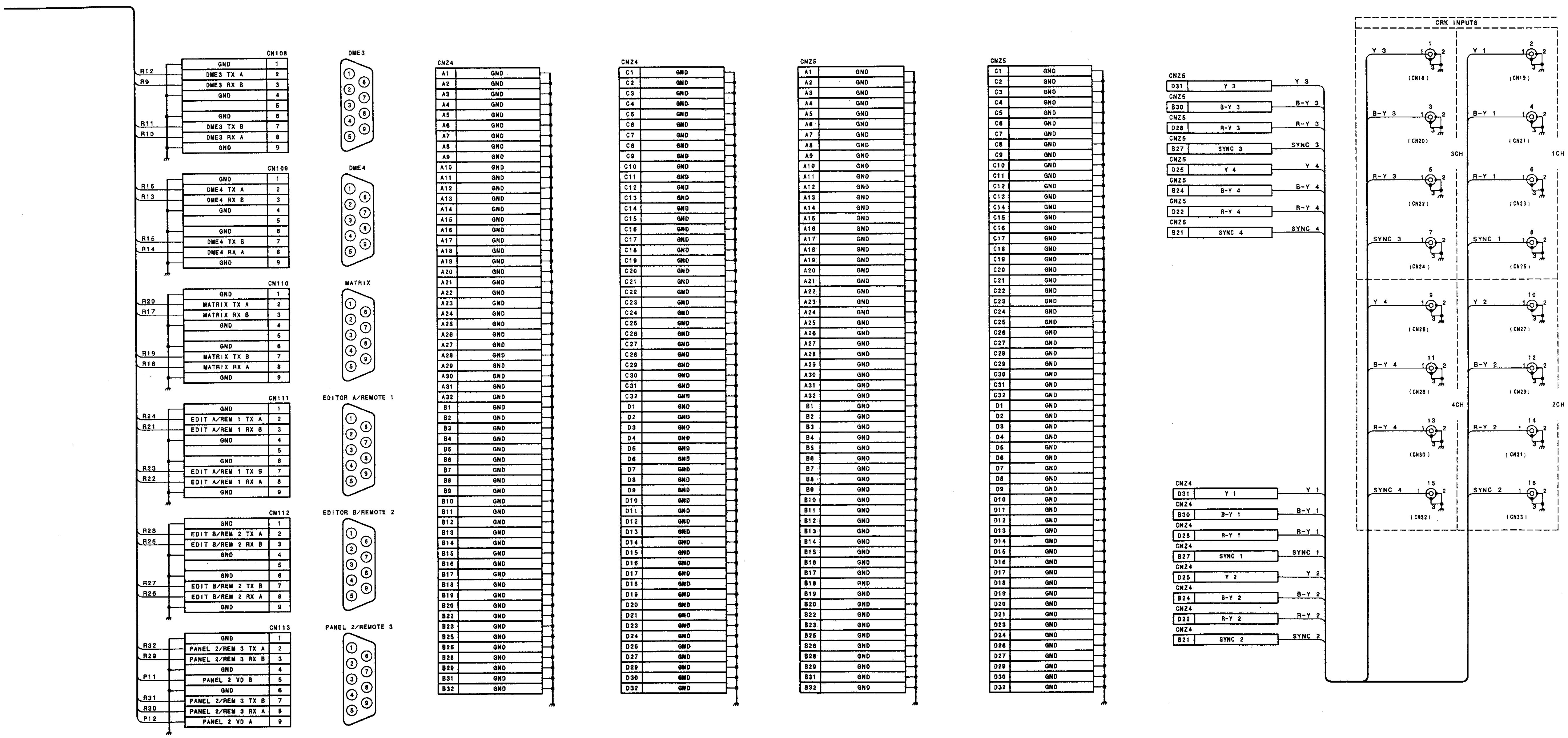

Connector Board
CN-1146
DVS-7000
BOARD NO. 1-658-400-11/12
LOT NO. 507-
B-¥SJX050-CN1146

BKDS-7011/7012/7021/7022/7023	(SY) : S/N 10001 and Higher
BKDS-7011R/7012R/7021R/7022R/7023R	(SY) : S/N 10001 and Higher
BKDS-7011LR/7012LR/7021LR/7022LR/7023LR	(SY) : S/N 10001 and Higher

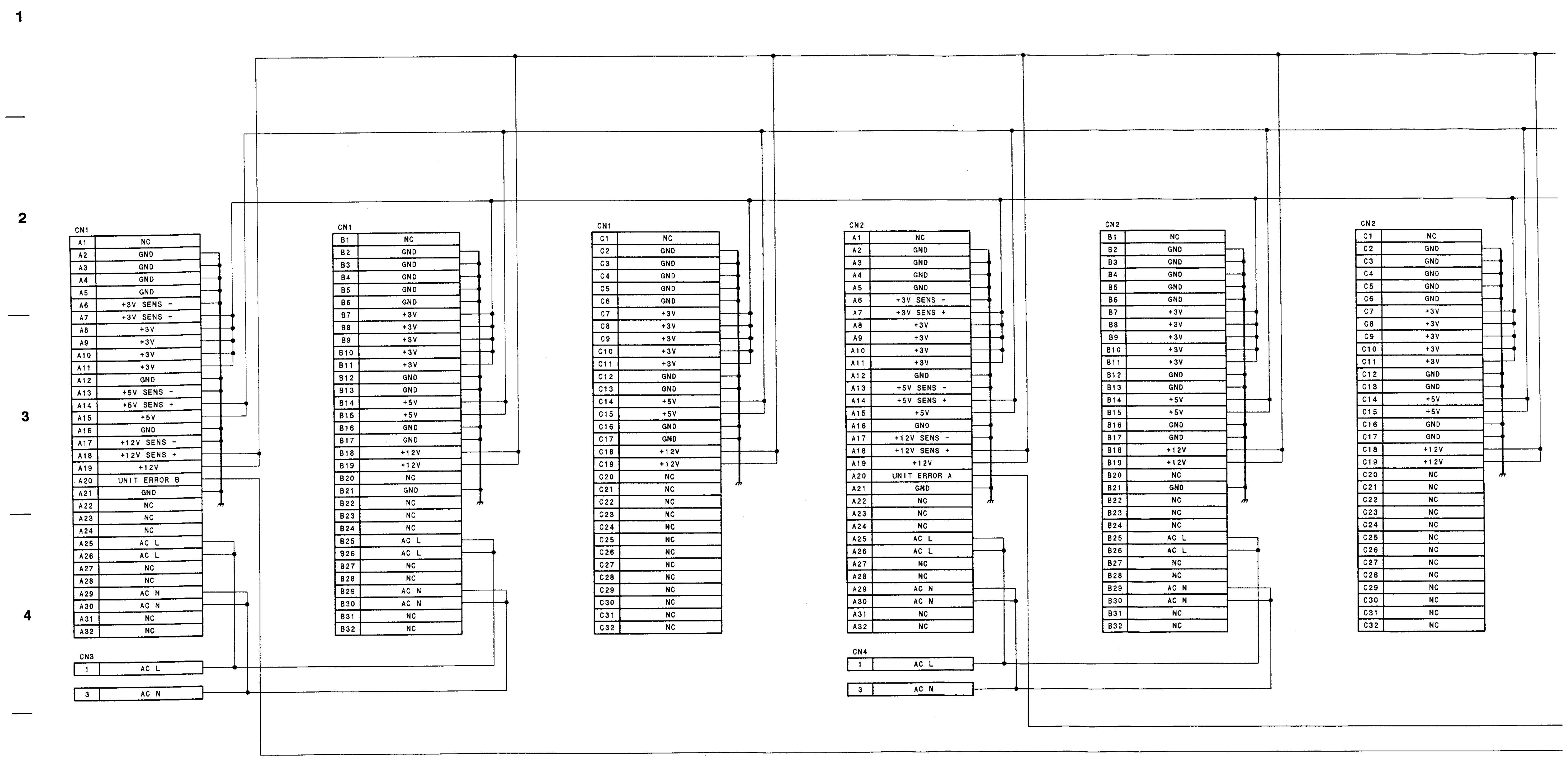

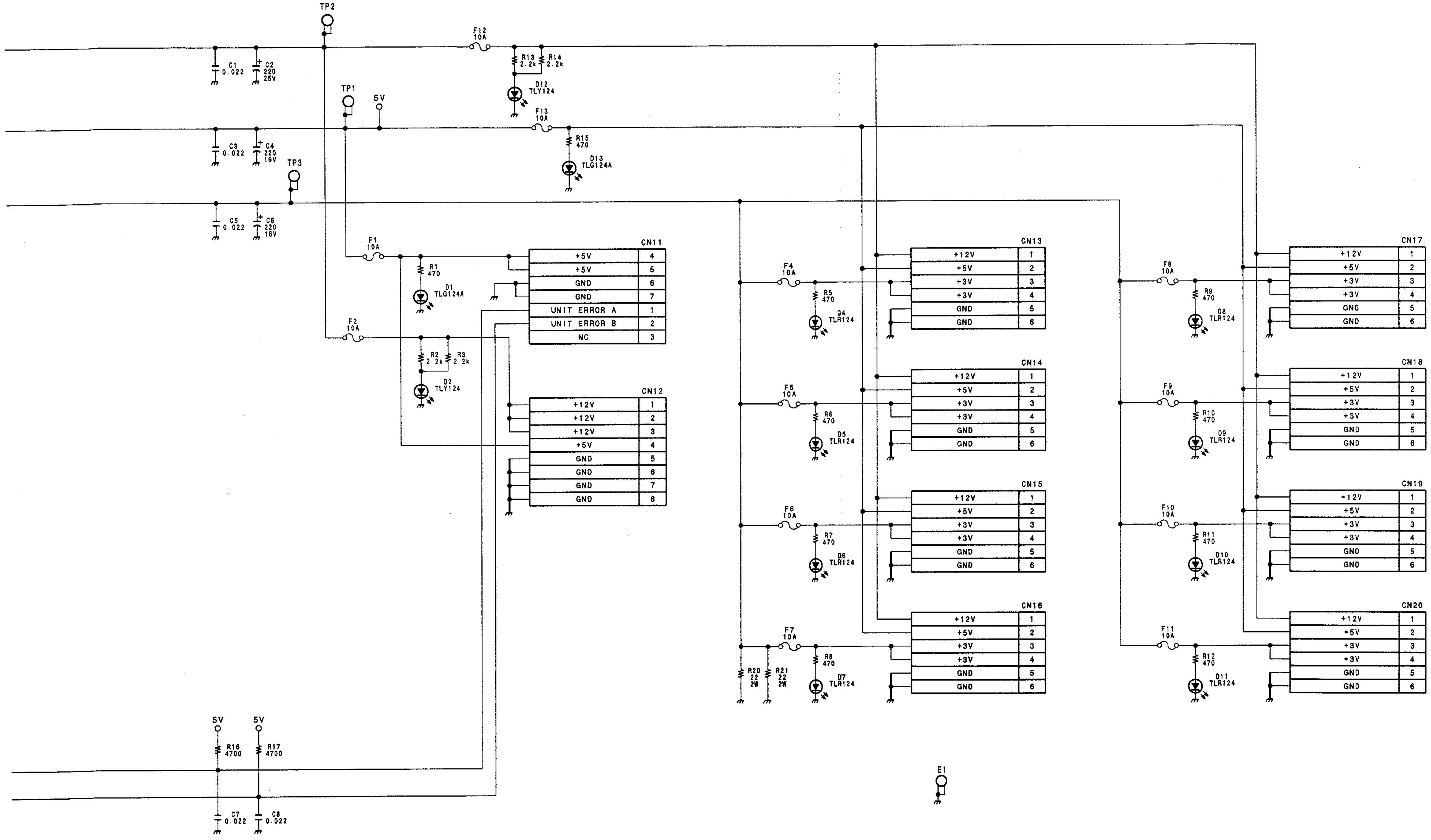

1
2
3
4
5

Connector Board
CN-1148
BKDS-7011/7012/7021/7022/7023
BKDS-70xxR/70xxLR
BOARD NO. 1-658-292-11/12
BKDS-7011/7021/7022 : LOT NO. 505-
BKDS-7012 : LOT NO. 511-
BKDS-7023 : LOT NO. 509-
BKDS-70xxR/70xxLR : LOT NO. 601-
B-¥SJXA076-CN1148

BKDS-7011/7012/7021/7022/7023
BKDS-7011R/7012R/7021R/7022R/7023R
BKDS-7011LR/7012LR/7021LR/7022LR/7023LR

I J K L M N O P

DMK-7000 (SY) : S/N 10001 and Higher

1

2

3

4

5

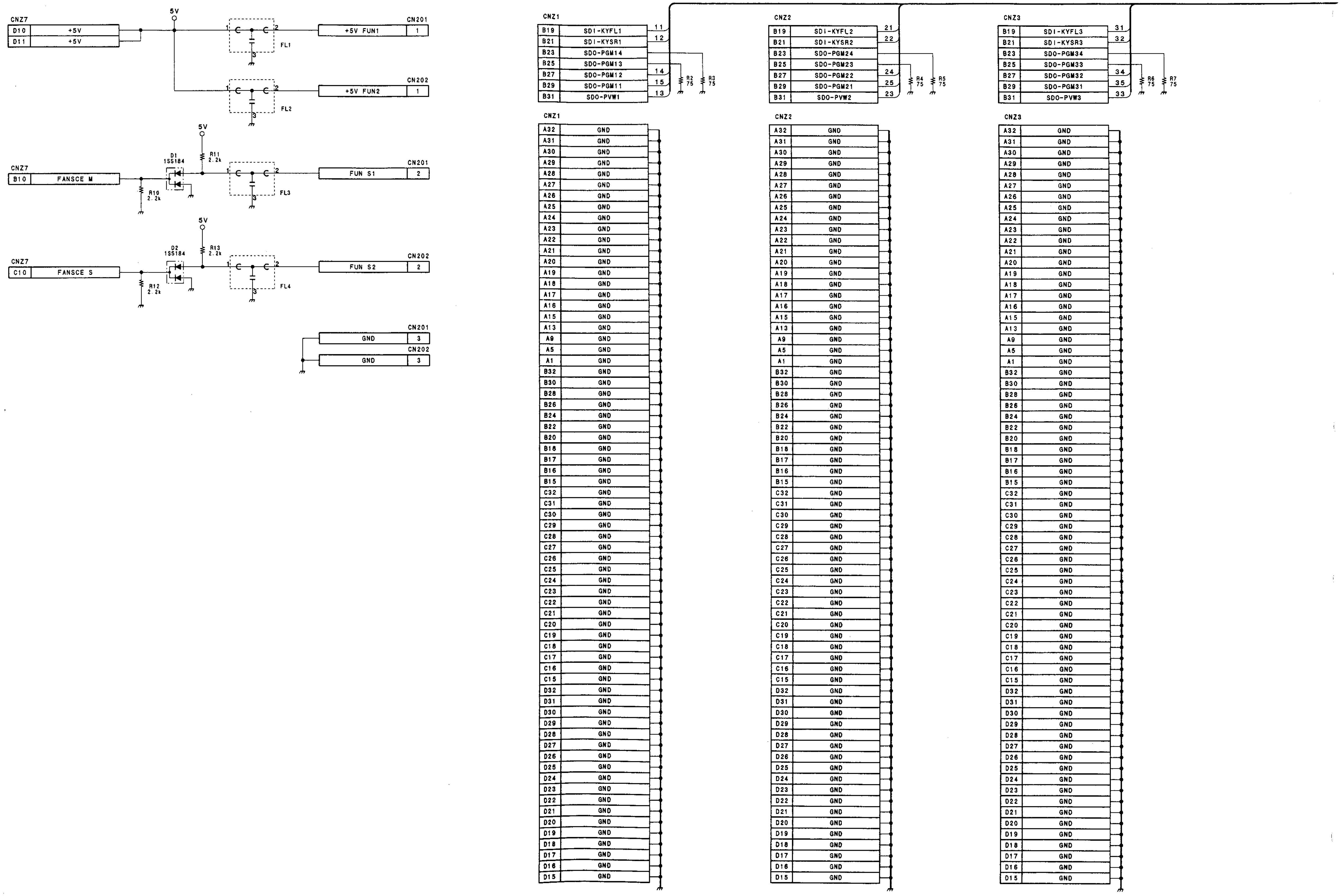

3-84

A B C D E F G H

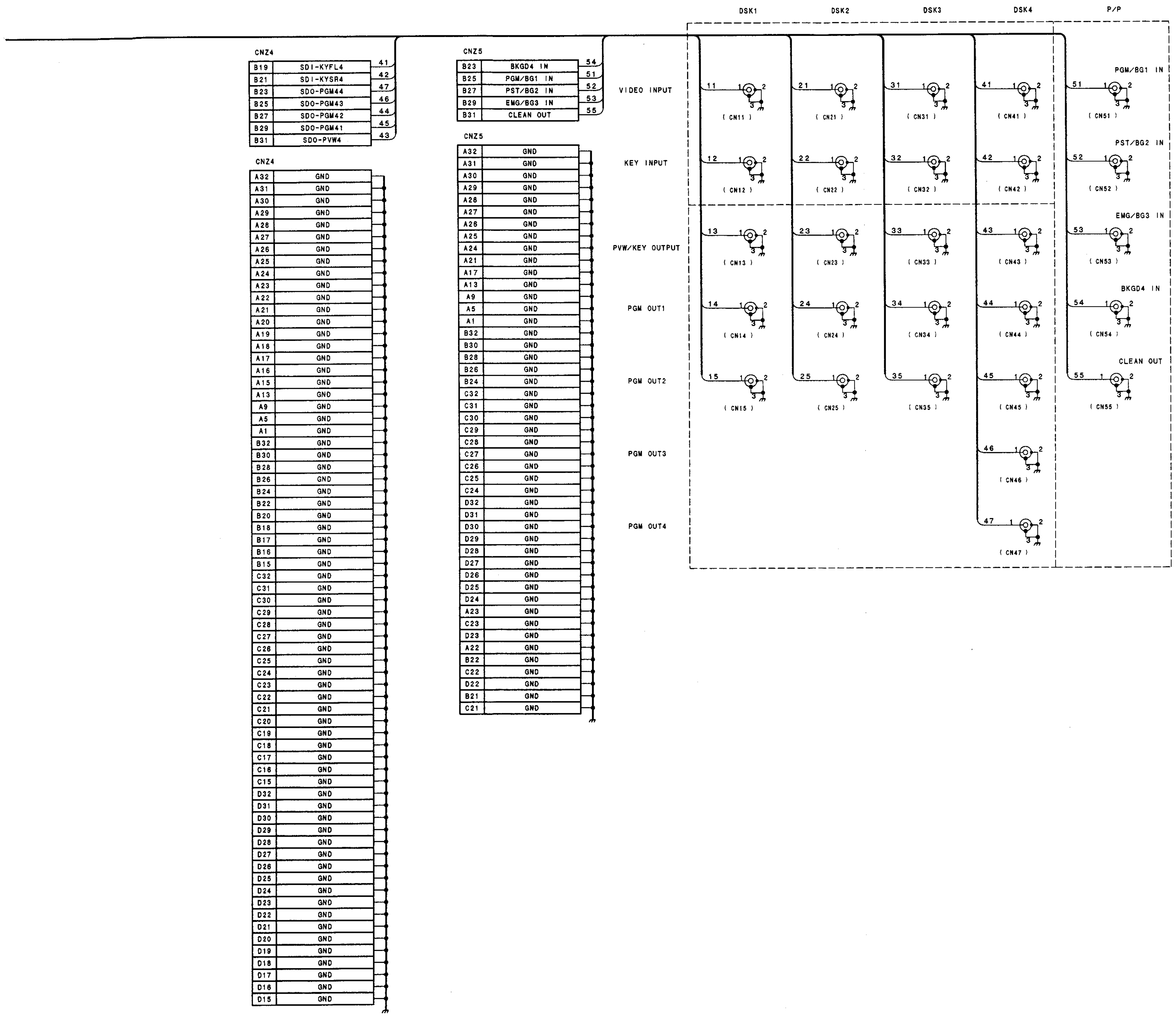

Connector Board
CN-1171 (1/2)
DMK-7000
BOARD NO. 1-658-591-11
LOT NO. 506-
B-¥SJX054-CN1171

DMK-7000 (SY) : S/N 10001 and Higher

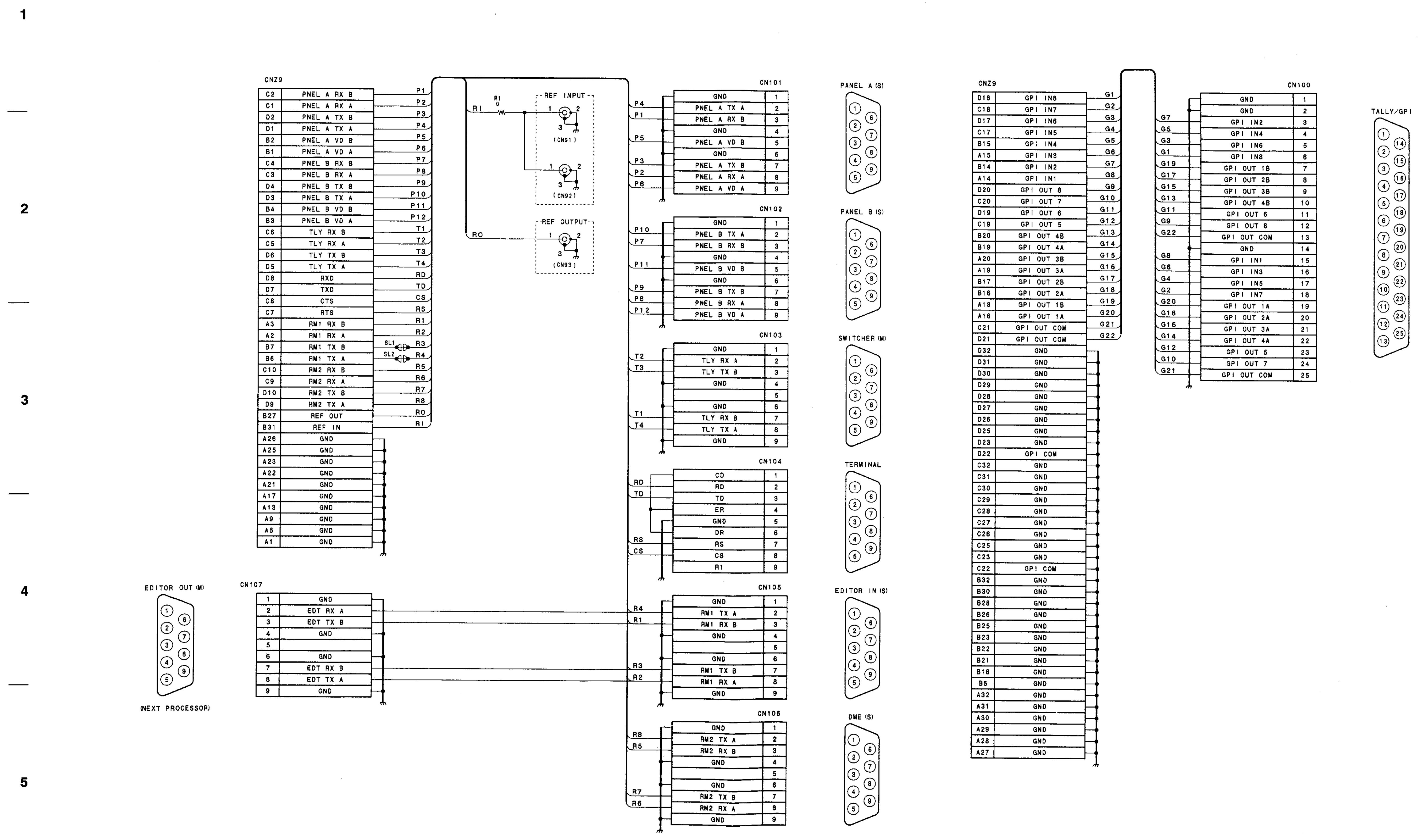

A | B | C | D | E | F | G | H

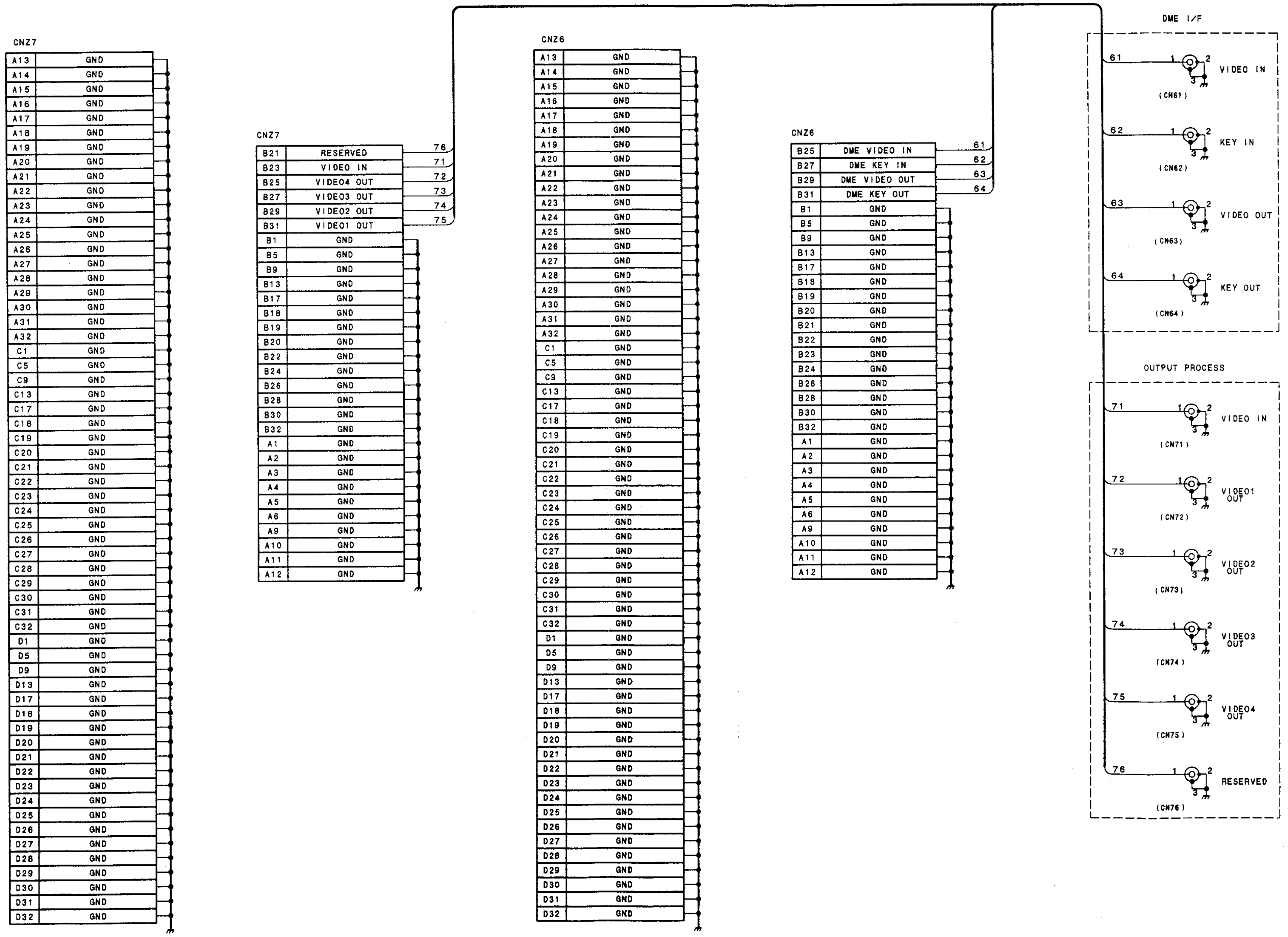

Connector Board
CN-1171 (2/2)
DMK-7000
BOARD NO. 1-658-591-11
LOT NO. 506-
B-¥SJX054-CN1171

BKDS-M1010 (SY) : S/N 10001 and Higher

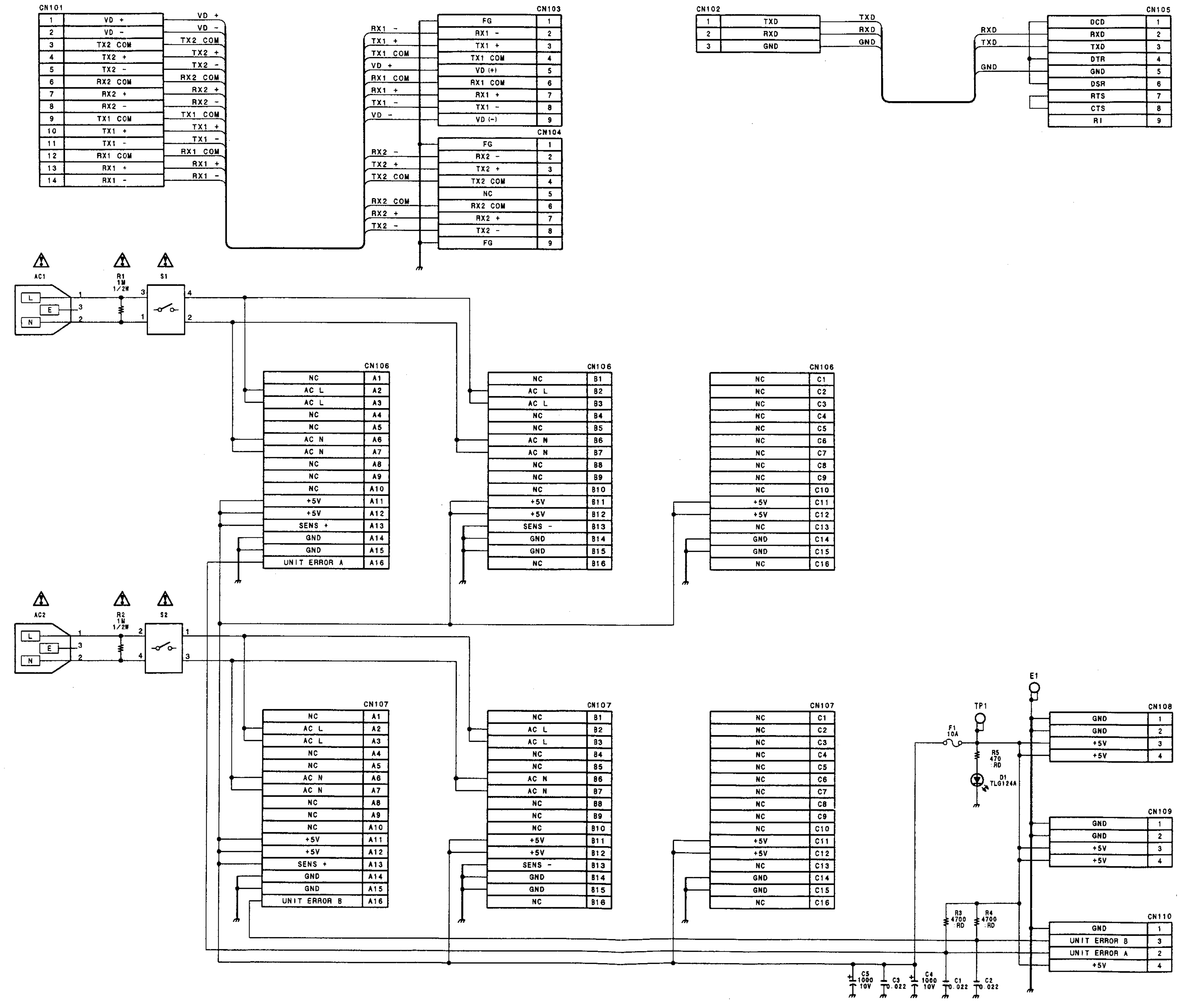

Connector Board
CN-1197
BKDS-M1010
BOARD NO. 1-658-382-11
LOT NO. 506-
B-¥SJXA079-CN1197

BKDS-7060 (SY) : S/N 10001 and Higher

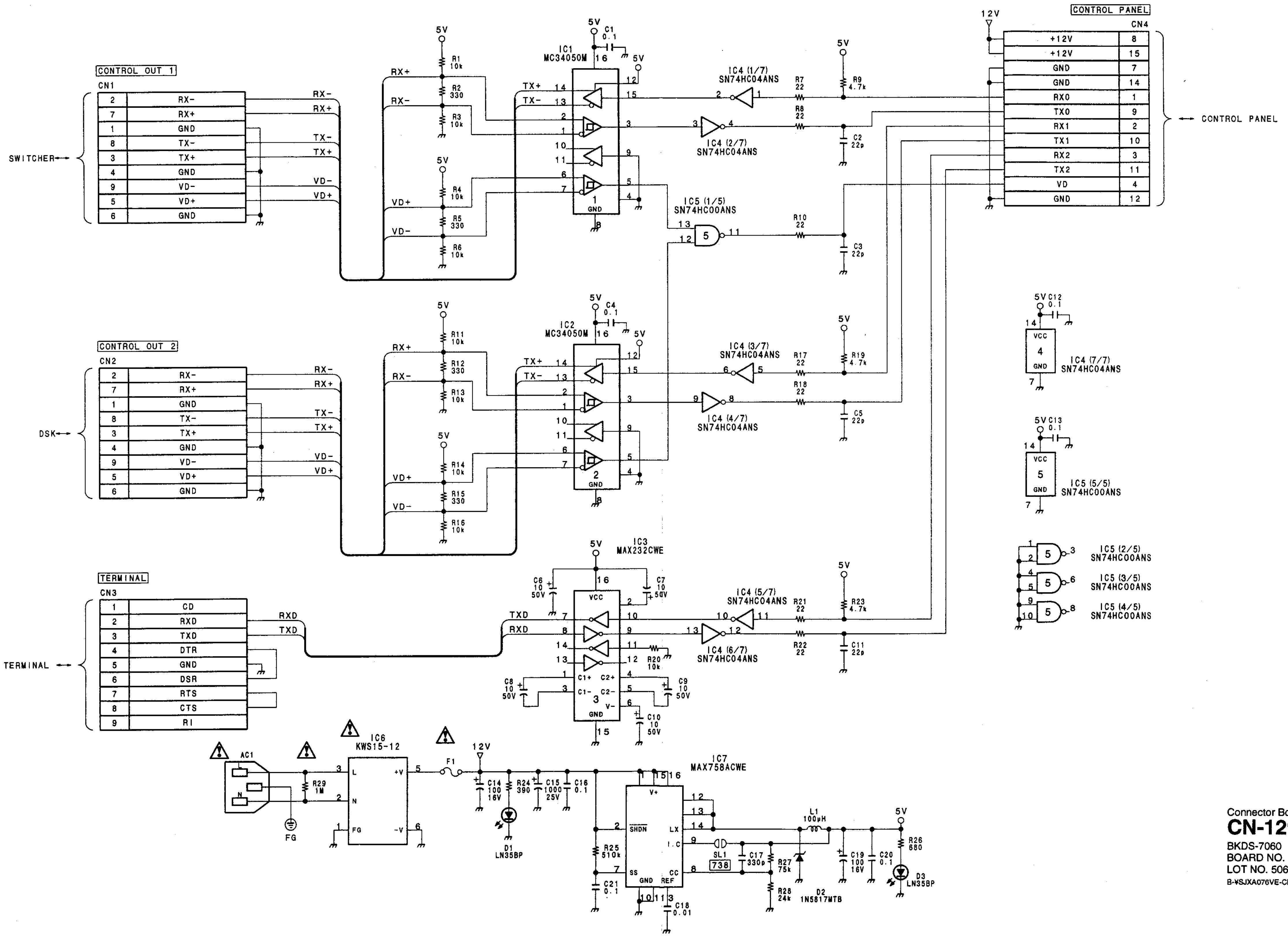

Connector Board
CN-1295
BKDS-7060
BOARD NO. 1-658-630-11
LOT NO. 506-
B-¥SJXA076VE-CN1295

DVS-M1000C (SY) : S/N 10001 and Higher

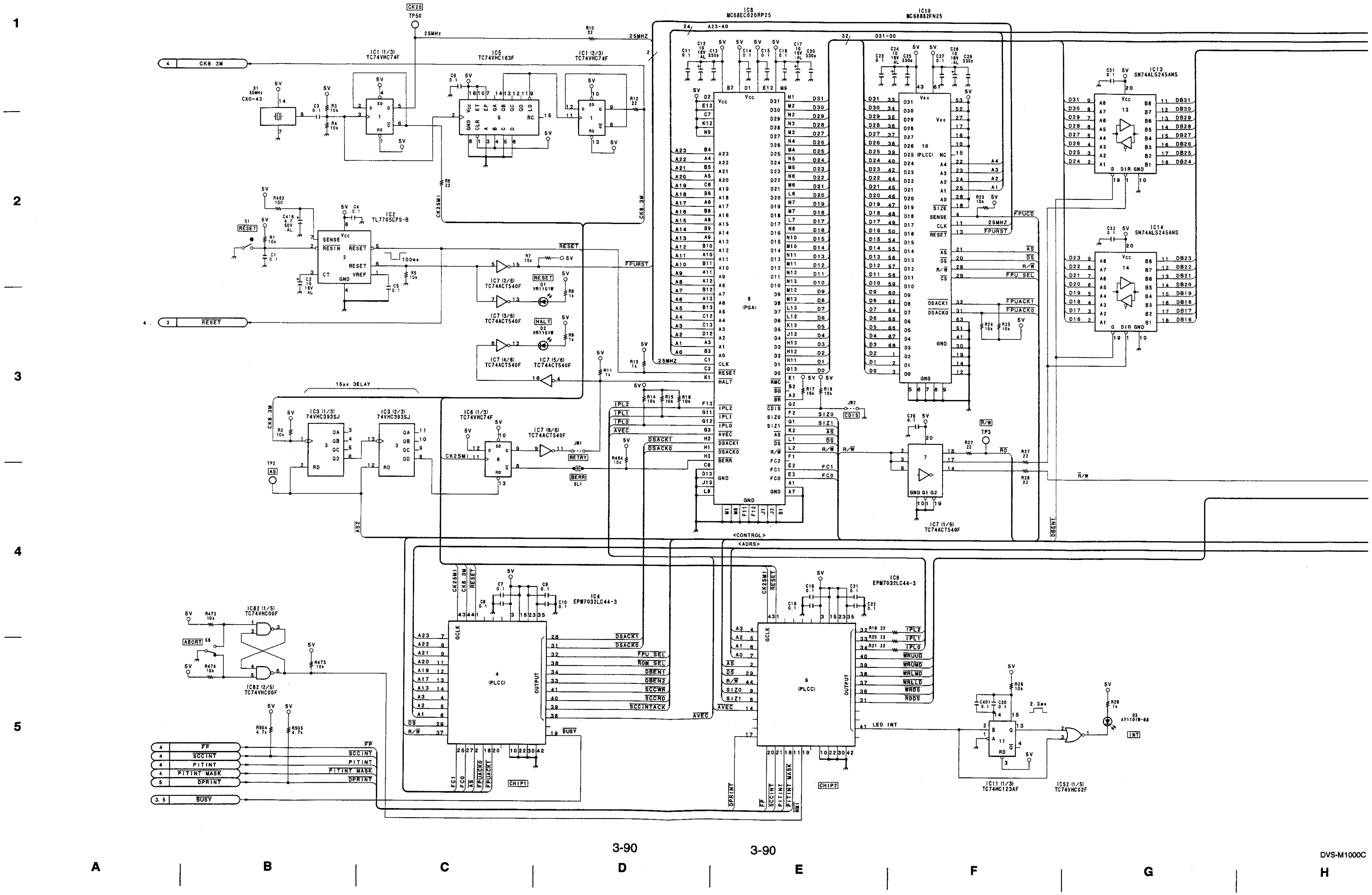

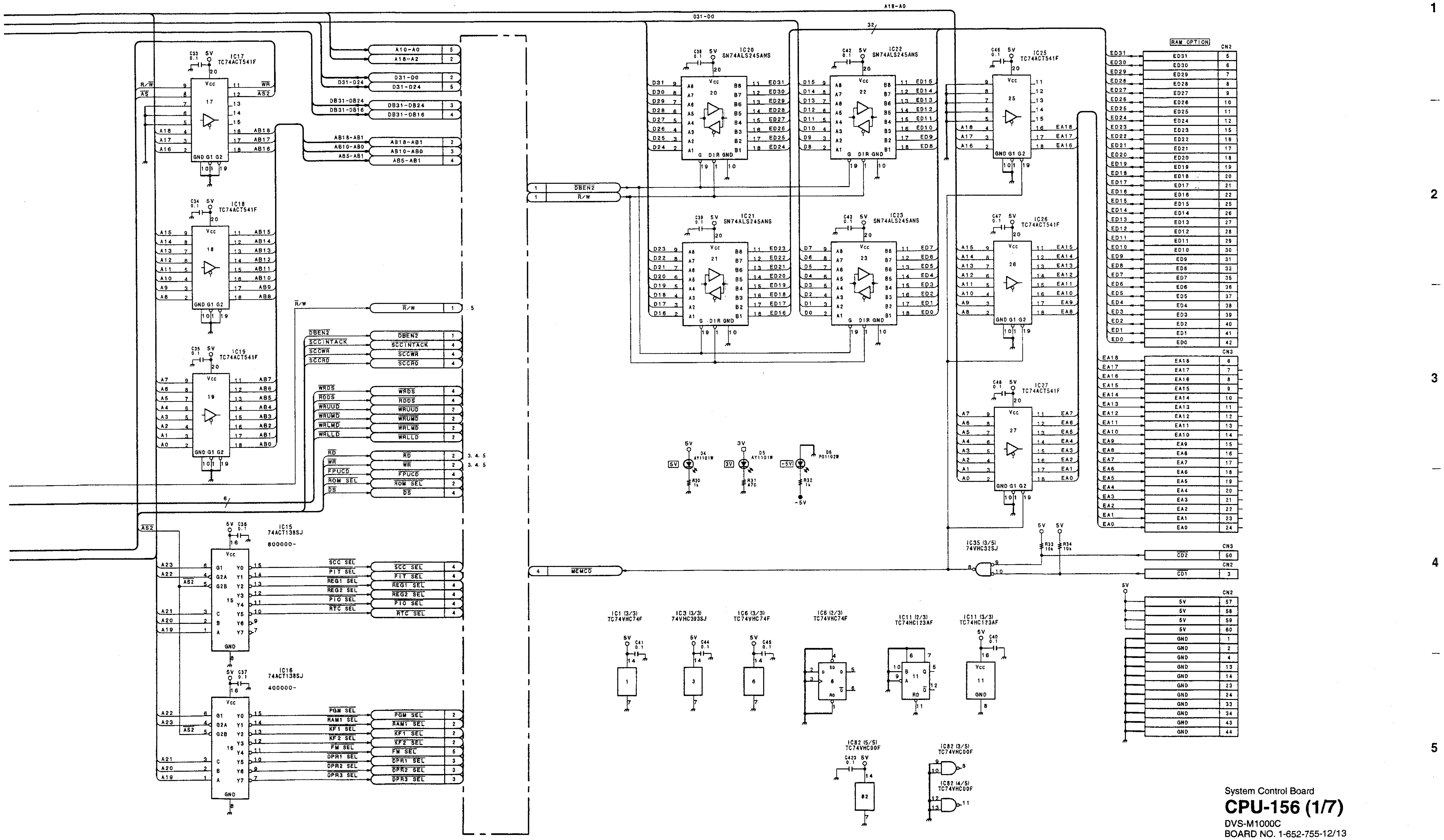

System Control Board
CPU-156 (1/7)
DVS-M1000C
BOARD NO. 1-652-755-12/13
LOT NO. 506-
B-¥SJX003-CPU156

DVS-M1000C (SY) : S/N 10001 and Higher

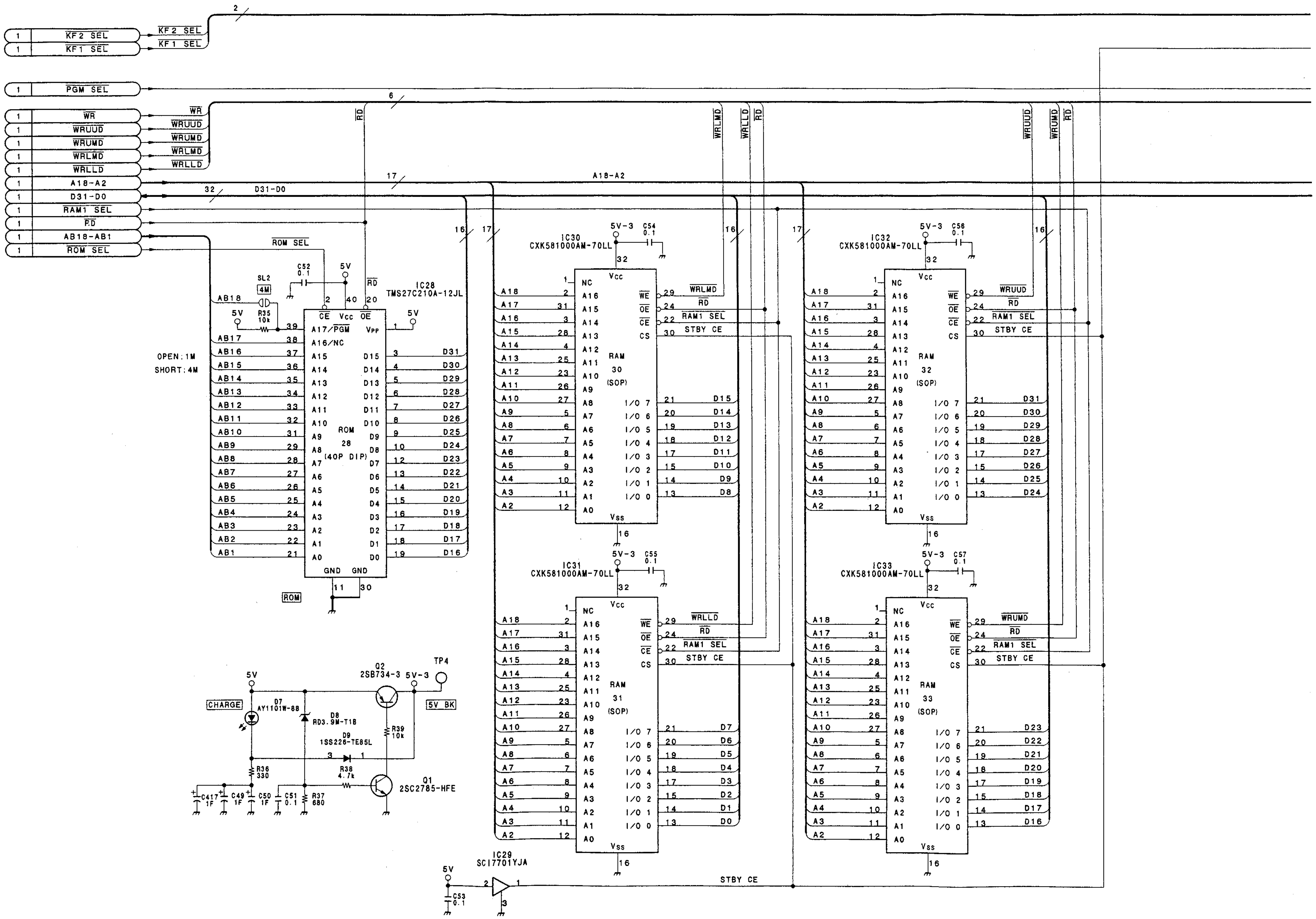

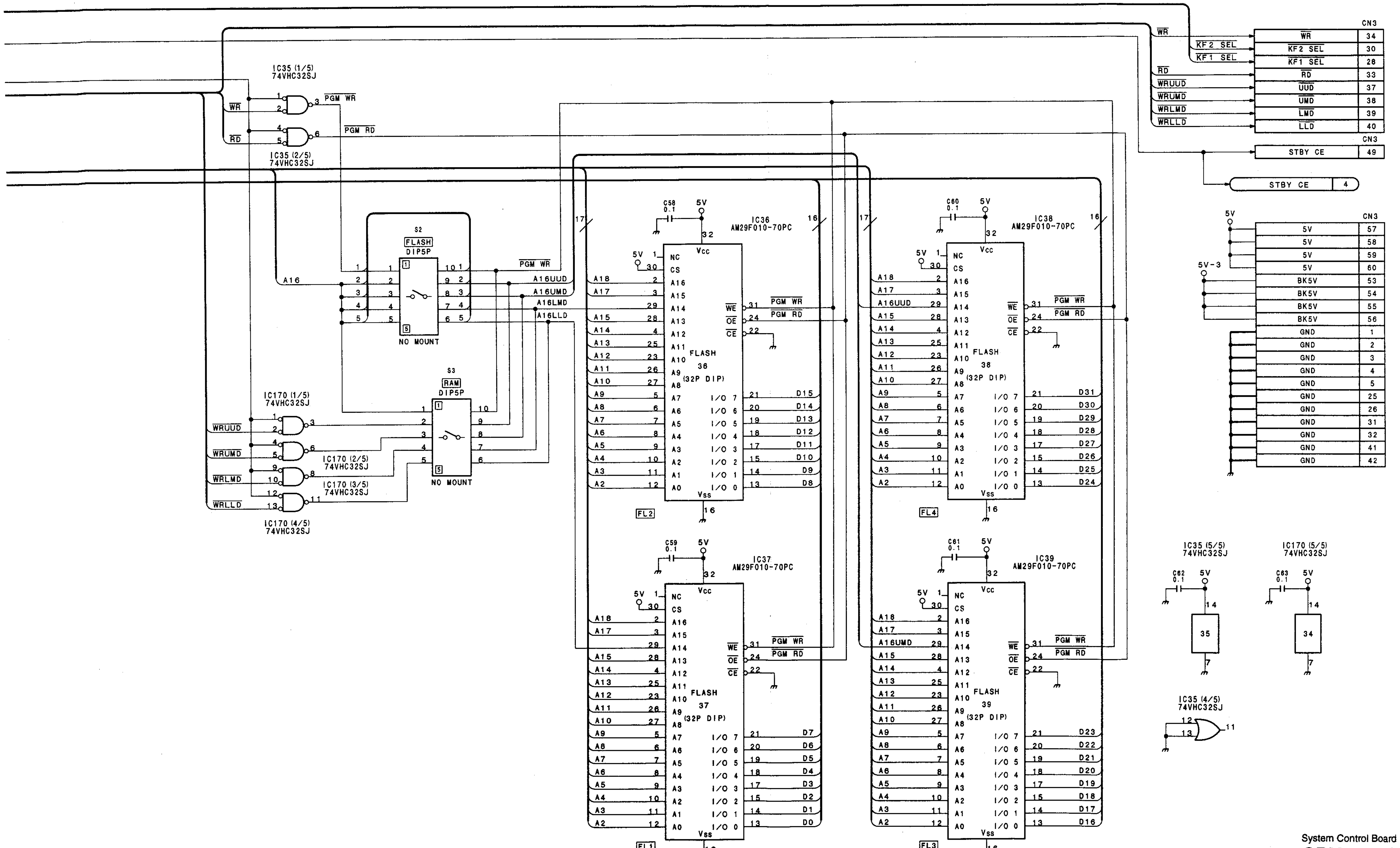

System Control Board
CPU-156 (2/7)
DVS-M1000C
BOARD NO. 1-652-755-12/13
LOT NO. 506-
B-¥SJX003-CPU156

DVS-M1000C (SY) : S/N 10001 and Higher

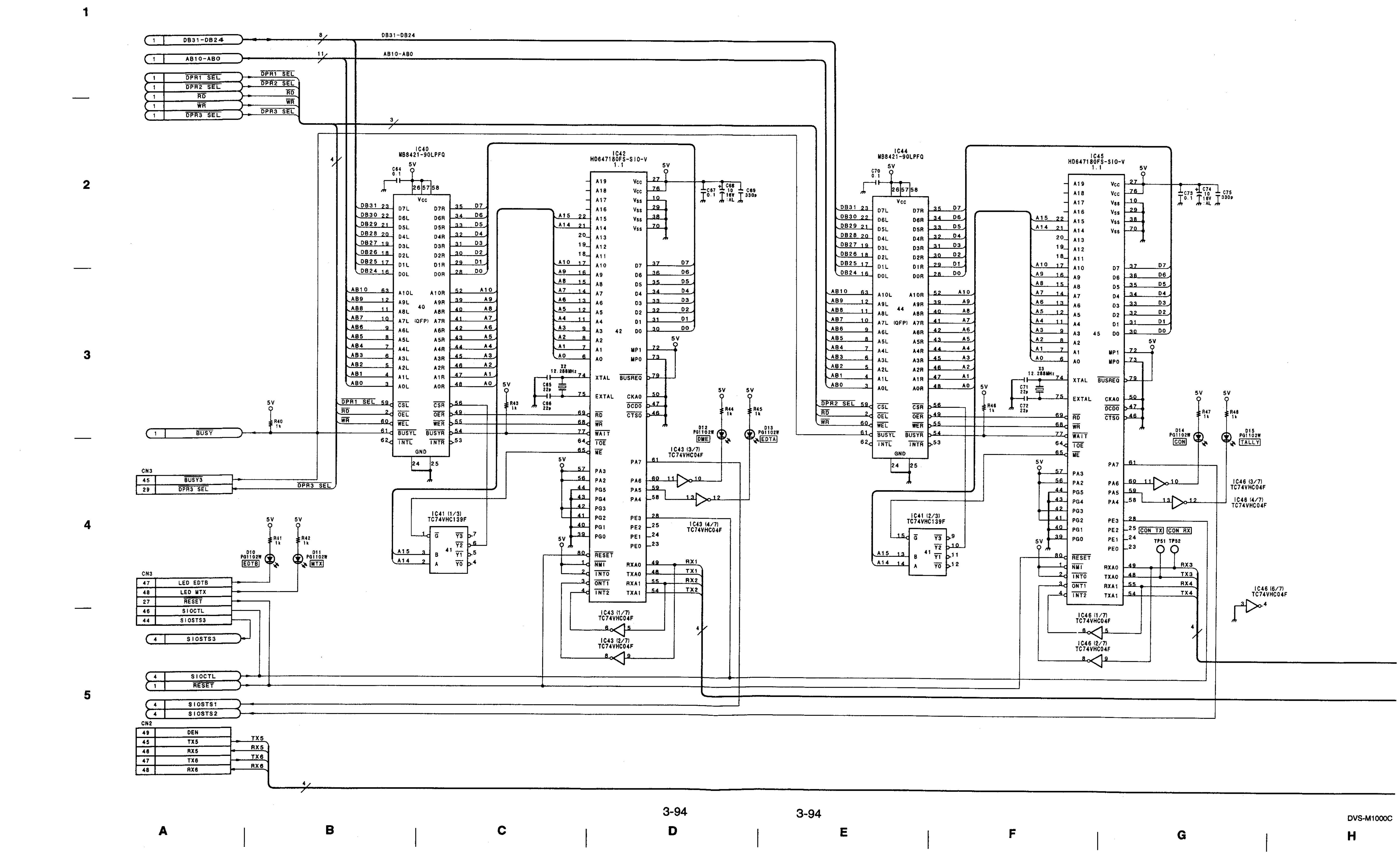

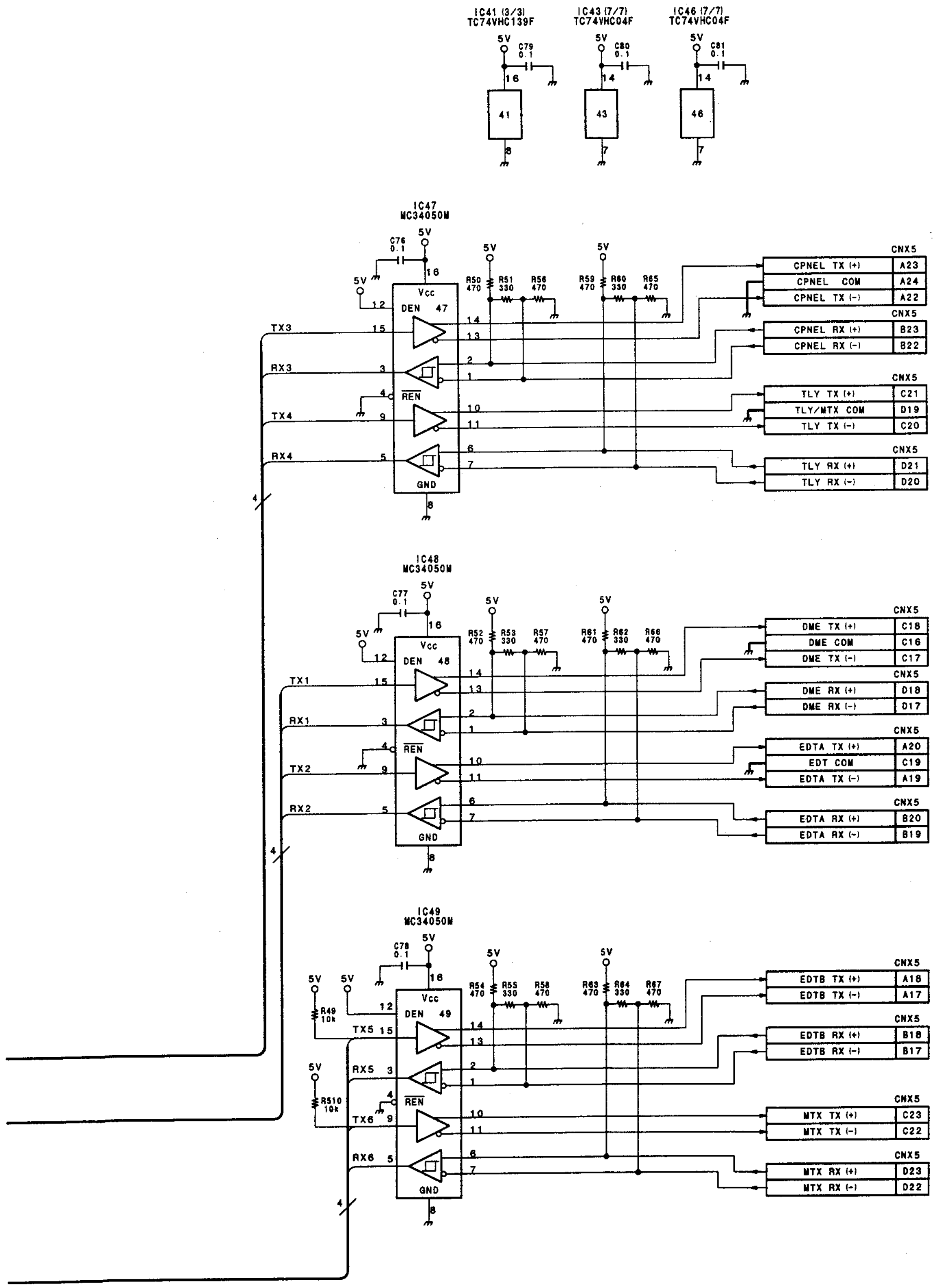

System Control Board

CPU-156 (3/7)

DVS-M1000C
BOARD NO. 1-652-755-12/13
LOT NO. 506-
B-VSJX003-CPU156

DVS-M1000C (SY) : S/N 10001 and Higher

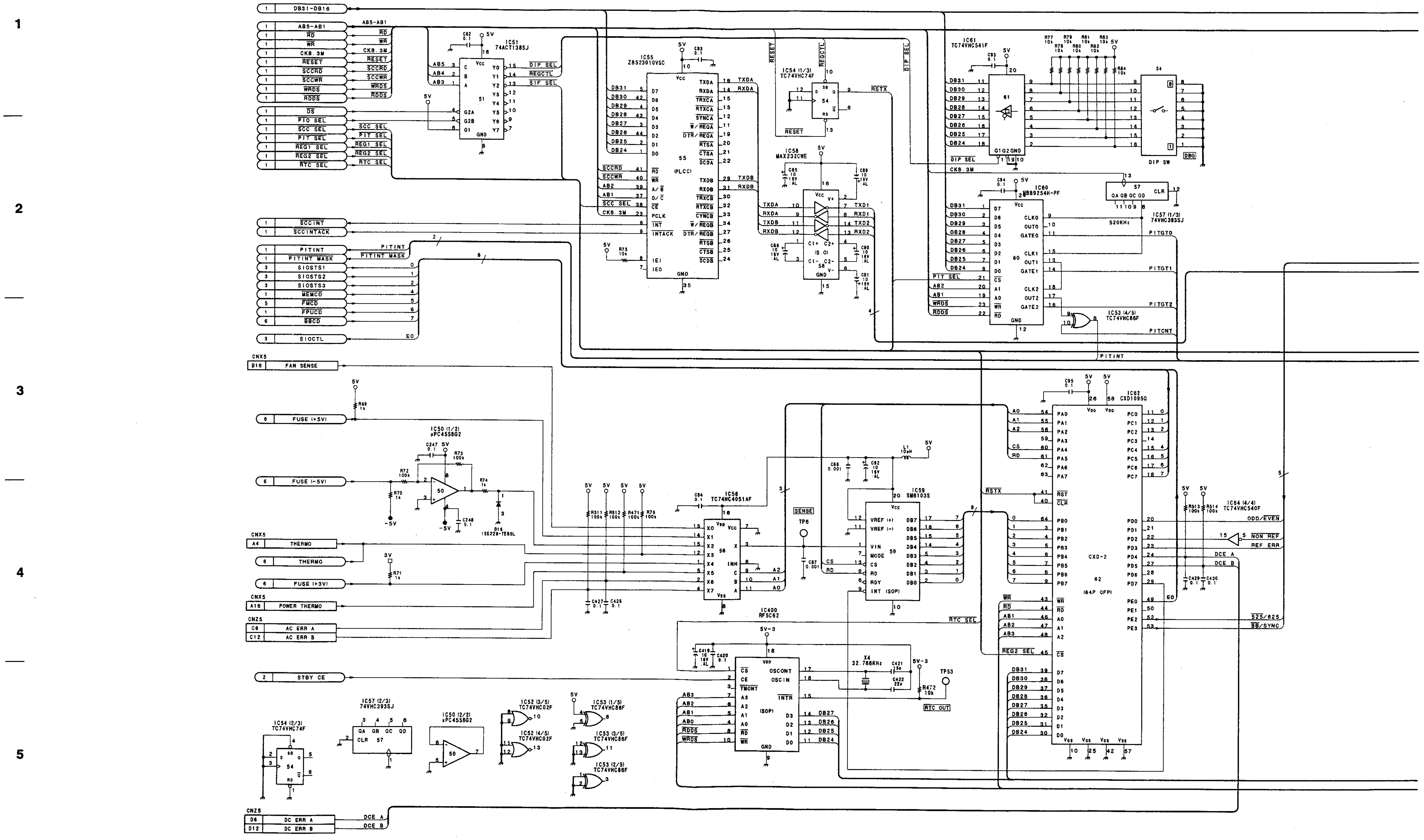

A B C D E F G H

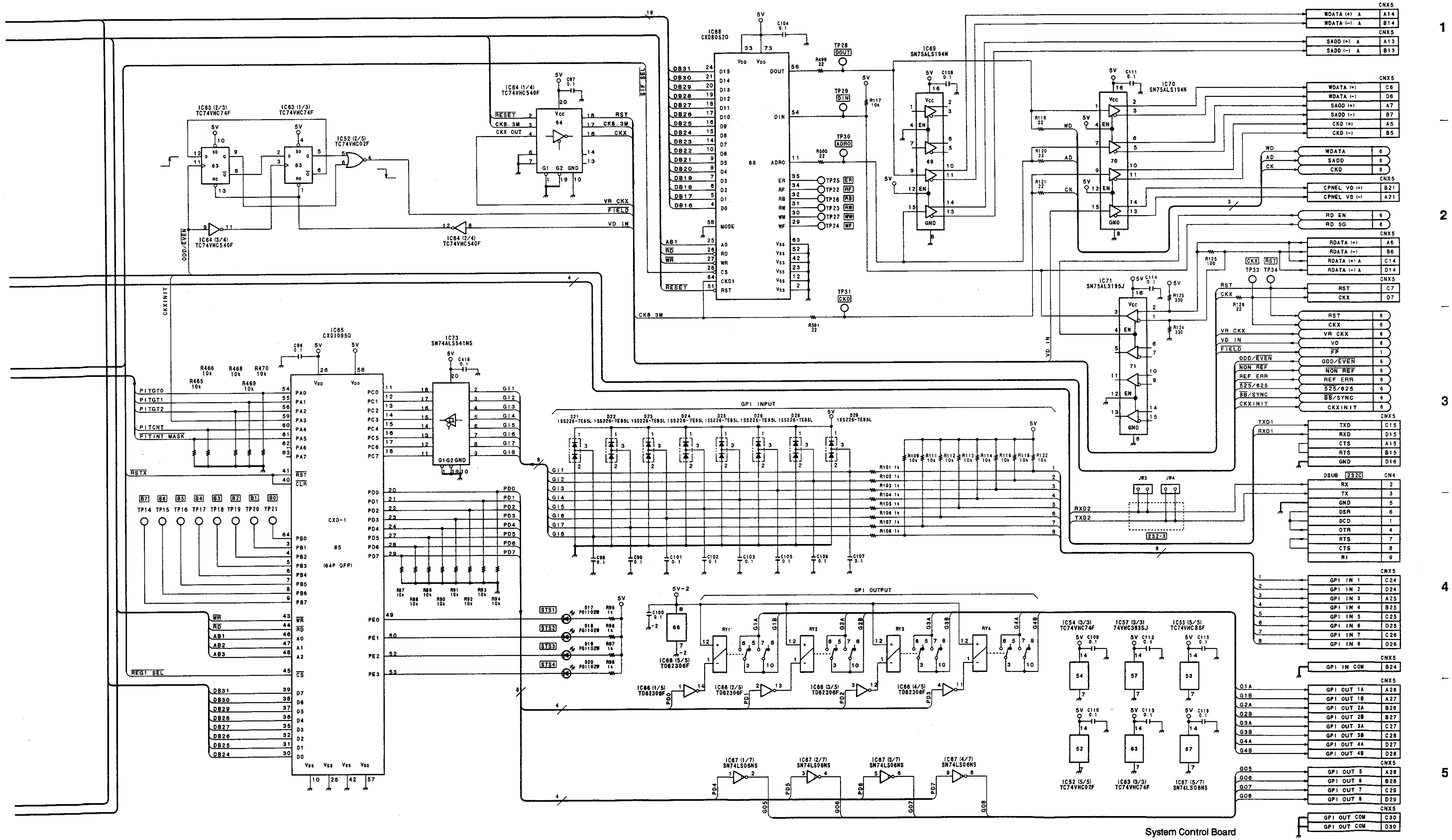

System Control Board
CPU-156 (4/7)
DVS-M1000C
BOARD NO. 1-652-755-12/13
LOT NO. 506-
B-¥SJX003-CPU156

 CPU-156 (5/7) System Control Board

DVS-M1000C (SY) : S/N 10001 and Higher

1

2

3

4

5

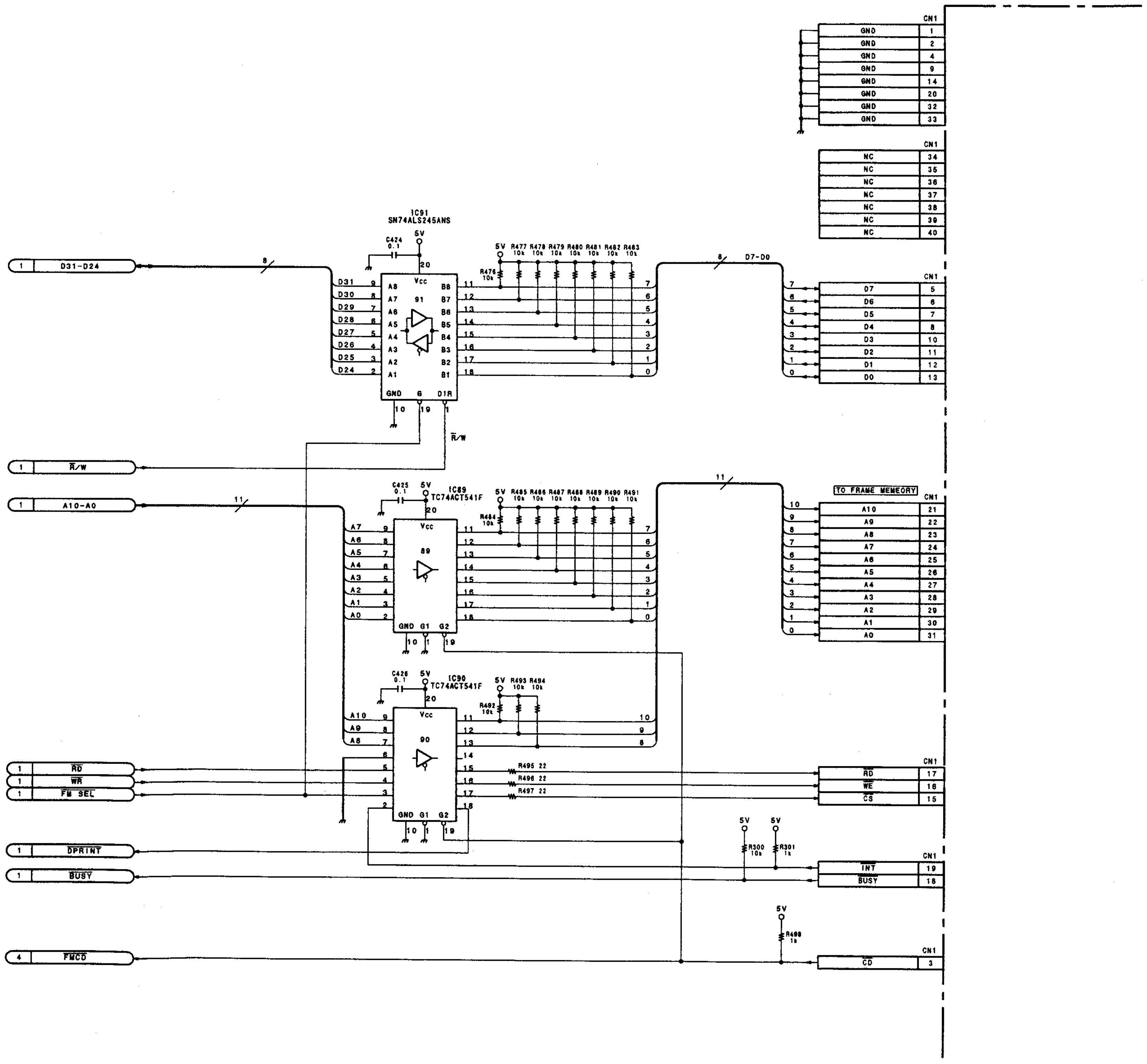

A B C D E F G H

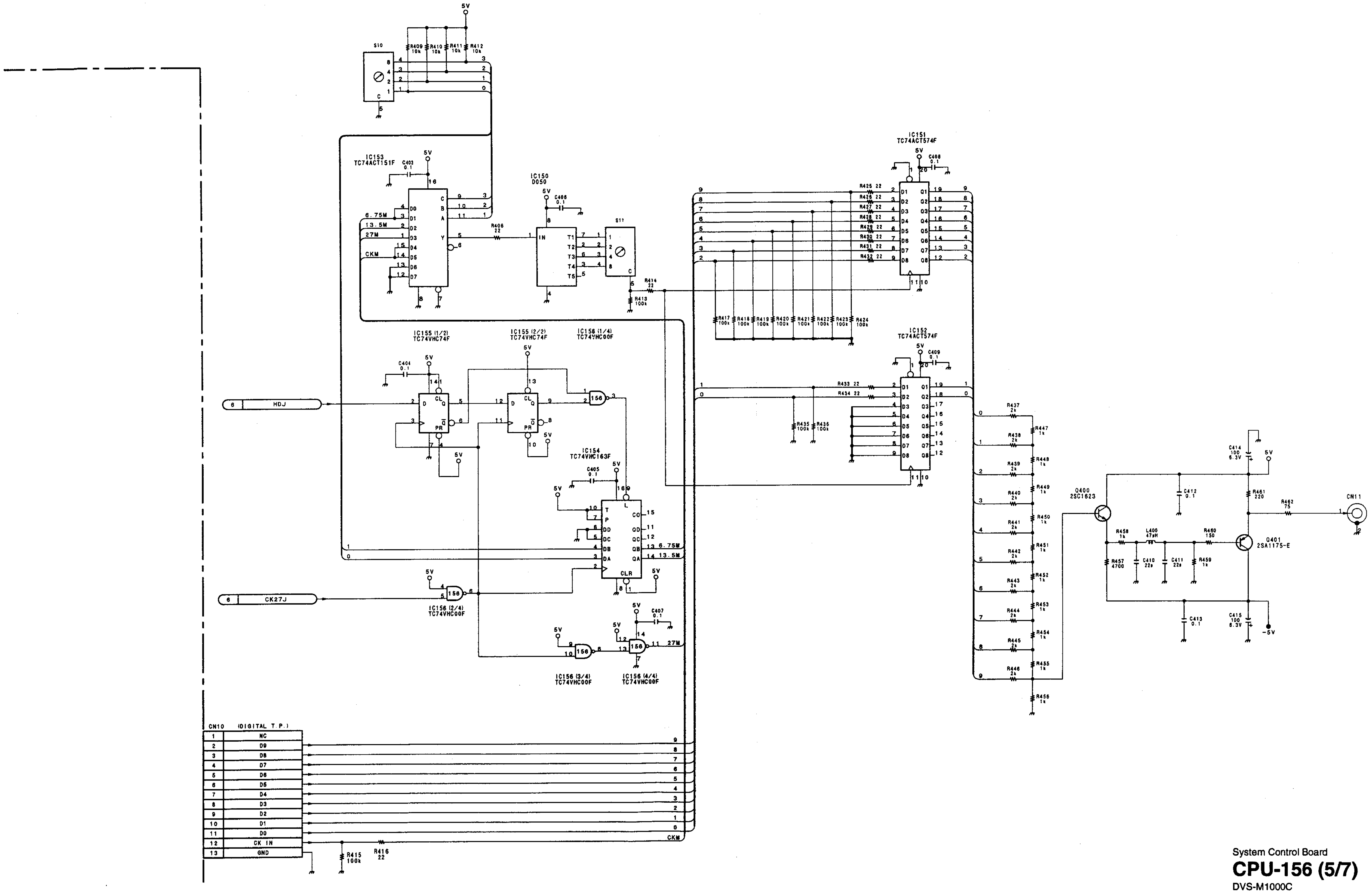

System Control Board

CPU-156 (5/7)

DVS-M1000C
BOARD NO. 1-652-755-12/13
LOT NO. 506-
B-¥SJX003-CPU156

DVS-M1000C (SY) : S/N 10001 and Higher

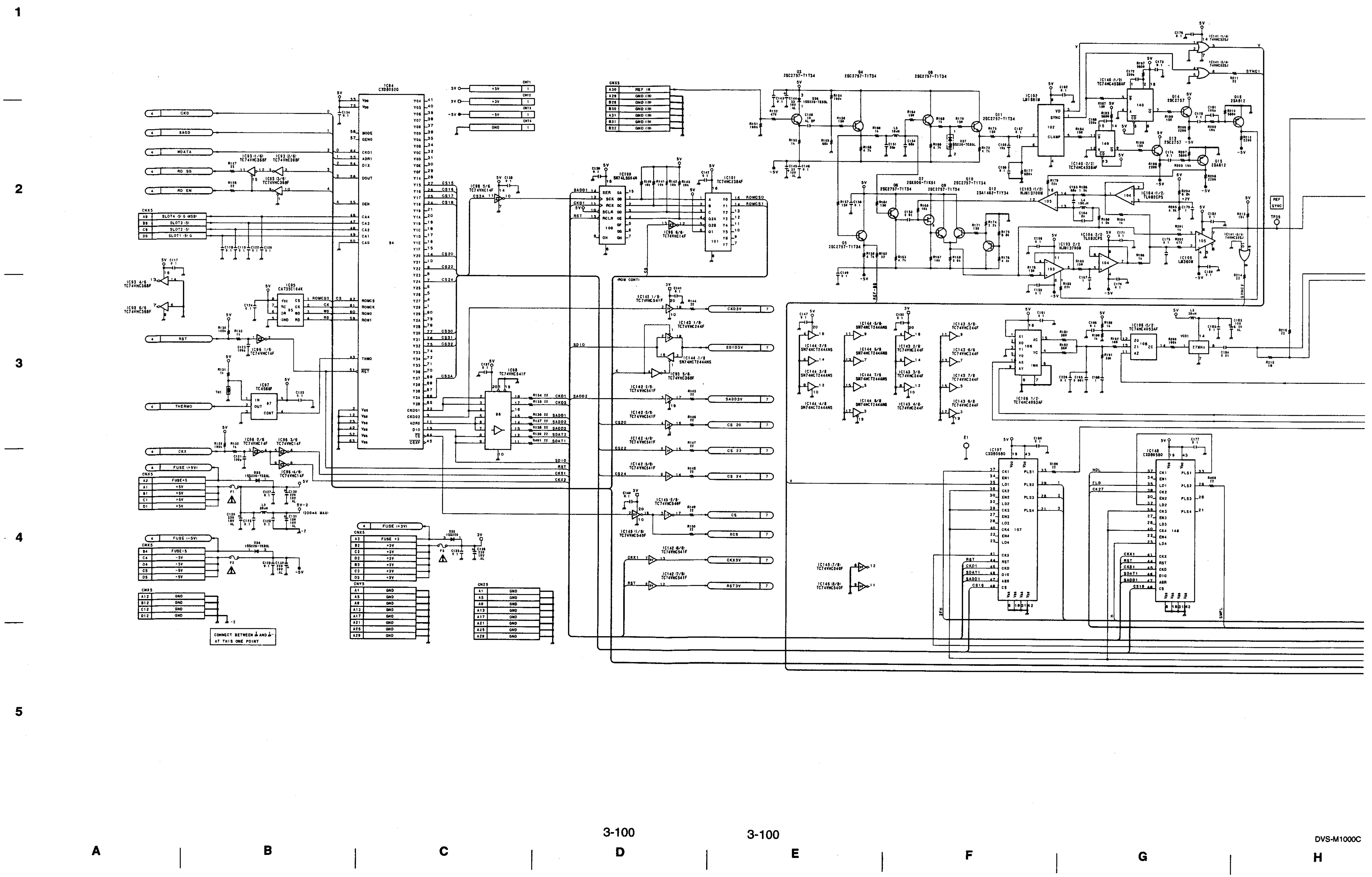

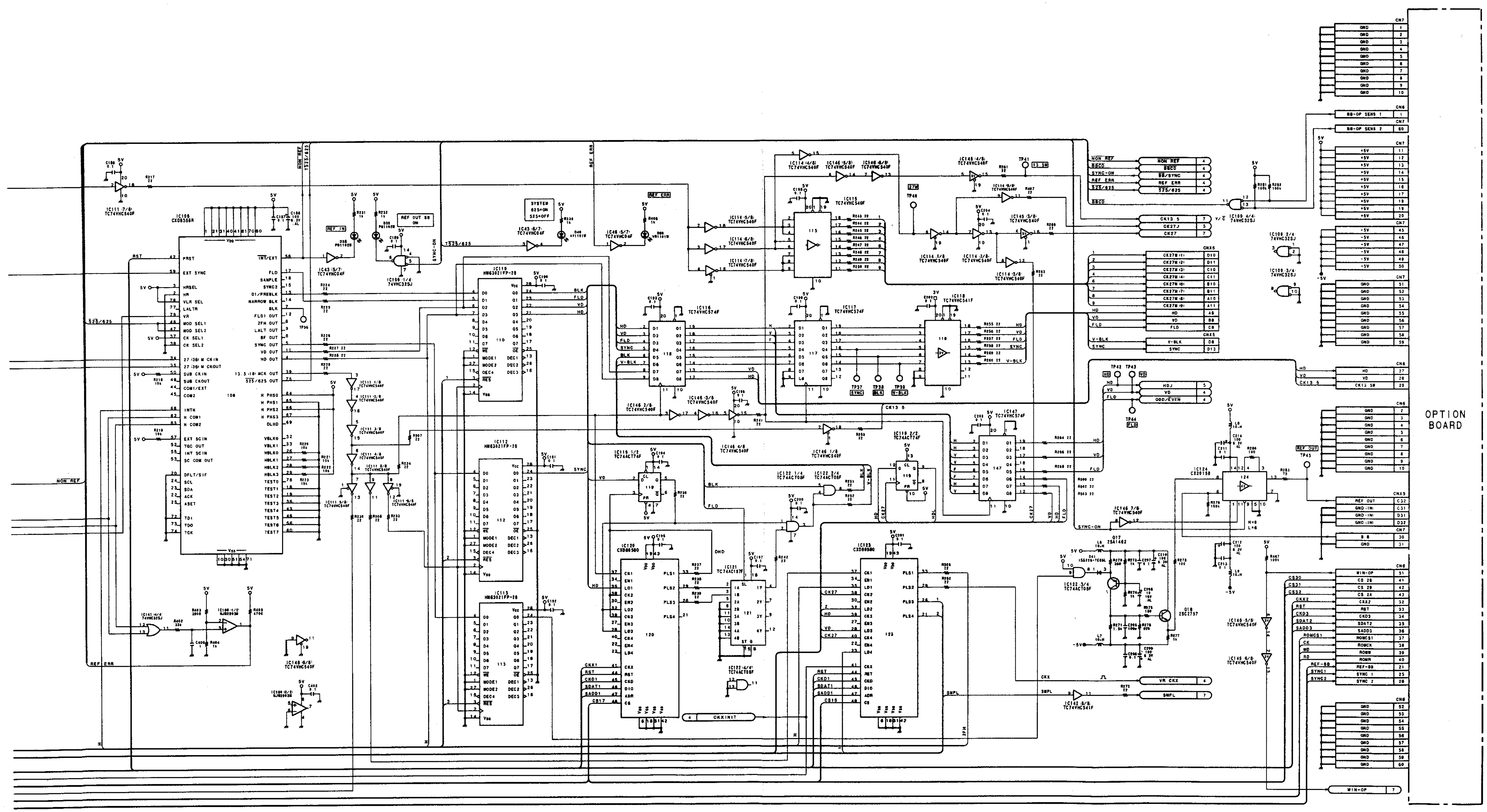

1

2

3

4

5

System Control Board

CPU-156 (6/7)

DVS-M1000C
BOARD NO. 1-652-755-12/13
LOT NO. 506-
B-¥SJX003-CPU156

DVS-M1000C (SY) : S/N 10001 and Higher

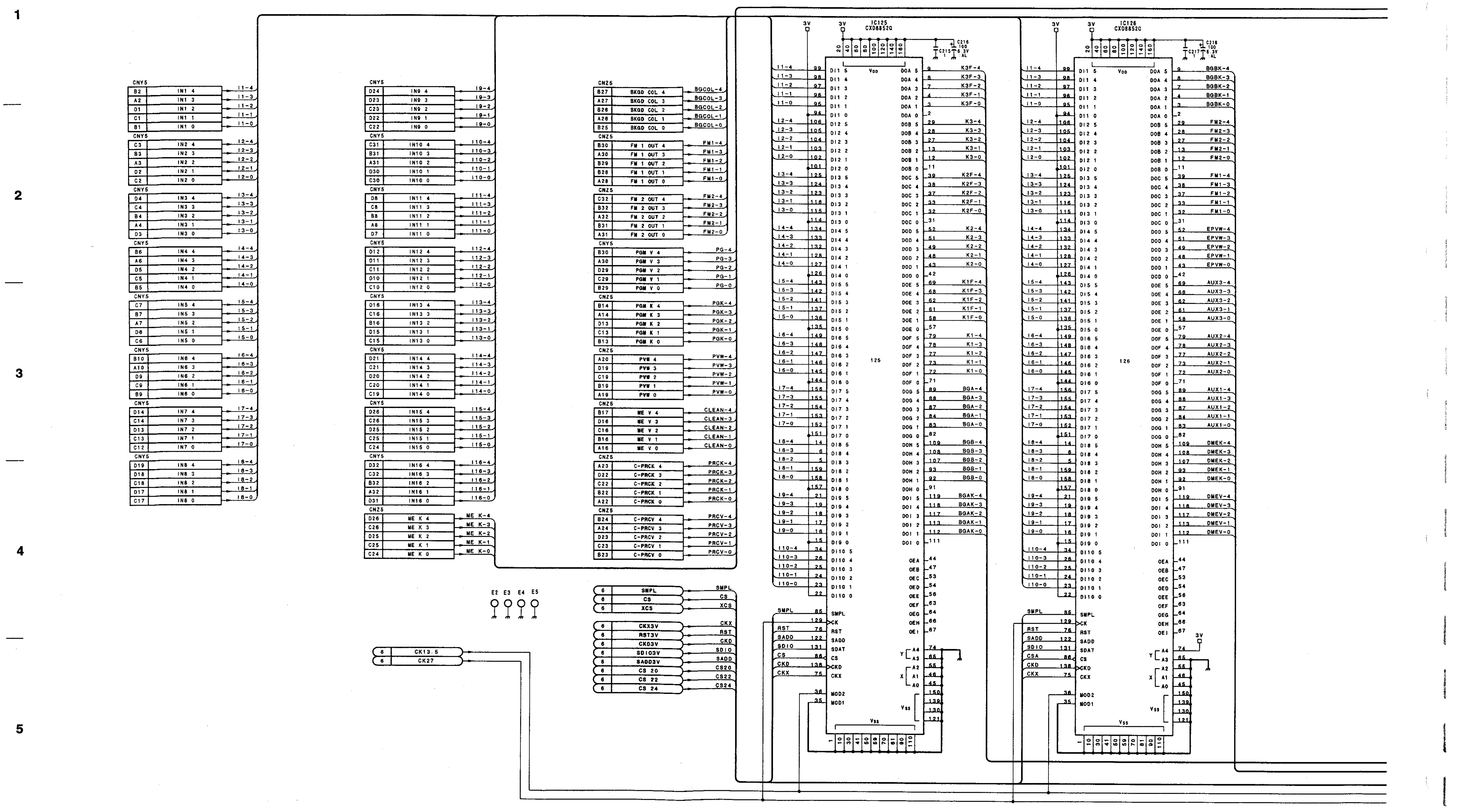

A B C D E F G H

1

2

3

4

5

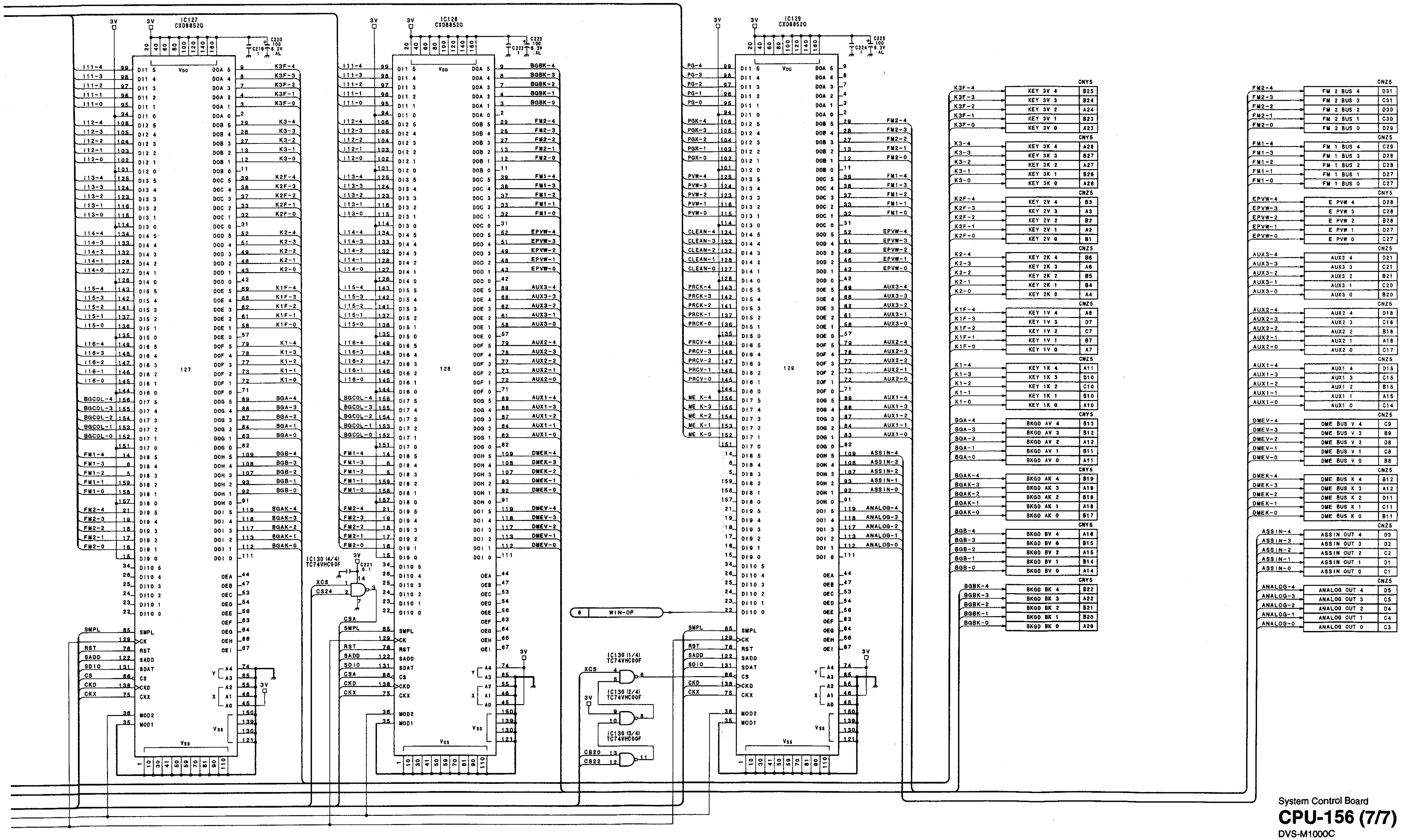

System Control Board
CPU-156 (7/7)
DVS-M1000C
BOARD NO. 1-652-755-12/13
LOT NO. 506-
B-¥SJX003-CPU156

I | J | K | L | M | N | O | P

BKDS-7011/7021/7022	(SY) : S/N 10016 and Higher
BKDS-7012/7023	(SY) : S/N 10001 and Higher
BKDS-7011R/7012R/7021R/7022R/7023R	(SY) : S/N 10001 and Higher
BKDS-7011LR/7012LR/7021LR/7022LR/7023LR	(SY) : S/N 10001 and Higher

1

2

3

4

5

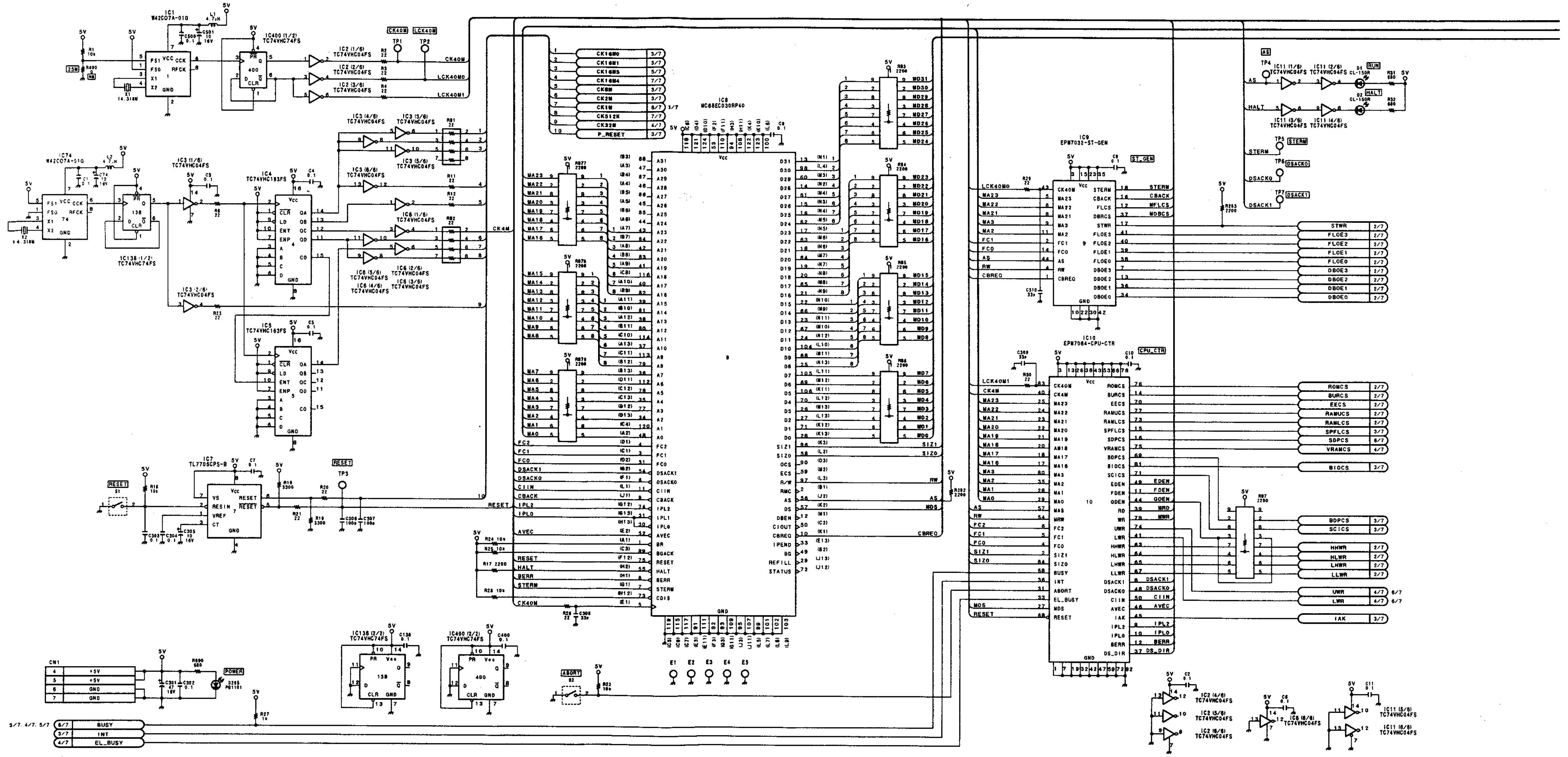

BKDS-7011/7012/7021/7022/7023
BKDS-7011R/7012R/7021R/7022R/7023R
BKDS-7011LR/7012LR/7021LR/7022LR/7023LR

A B C D E F G H

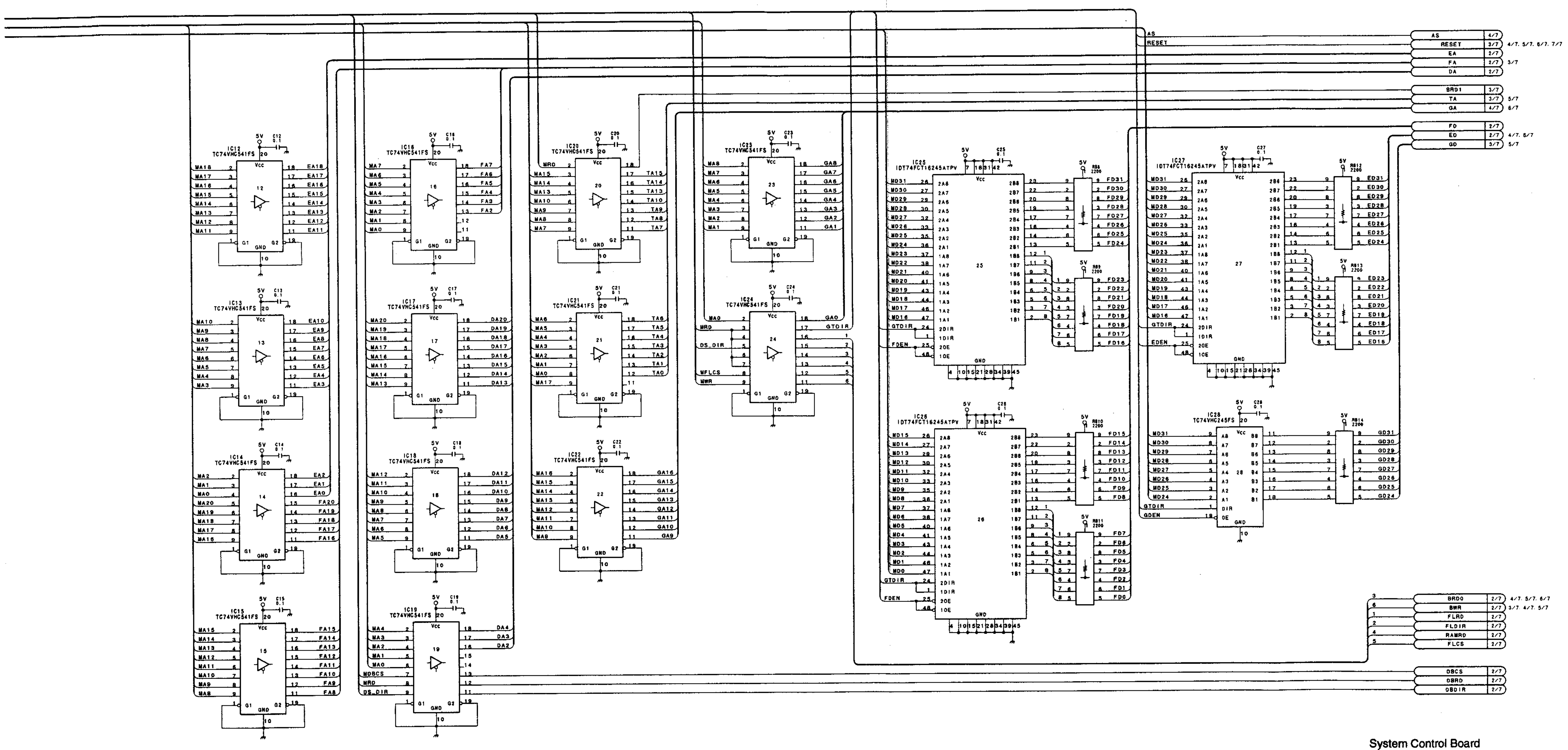

System Control Board
CPU-191 (1/7)
BKDS-7011/7012/7021/7022/7023
BKDS-70xxR/70xxLR
BOARD NO. 1-658-271-12
BKDS-7011/7021/7022 : LOT NO. 509-
BKDS-7012 : LOT NO. 511-
BKDS-7023 : LOT NO. 509-
BKDS-70xxR/70xxLR : LOT NO. 601-
B-¥SJXA076-CPU191

CPU-191 (2/7) System Control Board

BKDS-7011/7021/7022	(SY) : S/N 10016 and Higher
BKDS-7012/7023	(SY) : S/N 10001 and Higher
BKDS-7011R/7012R/7021R/7022R/7023R	(SY) : S/N 10001 and Higher
BKDS-7011LR/7012LR/7021LR/7022LR/7023LR	(SY) : S/N 10001 and Higher

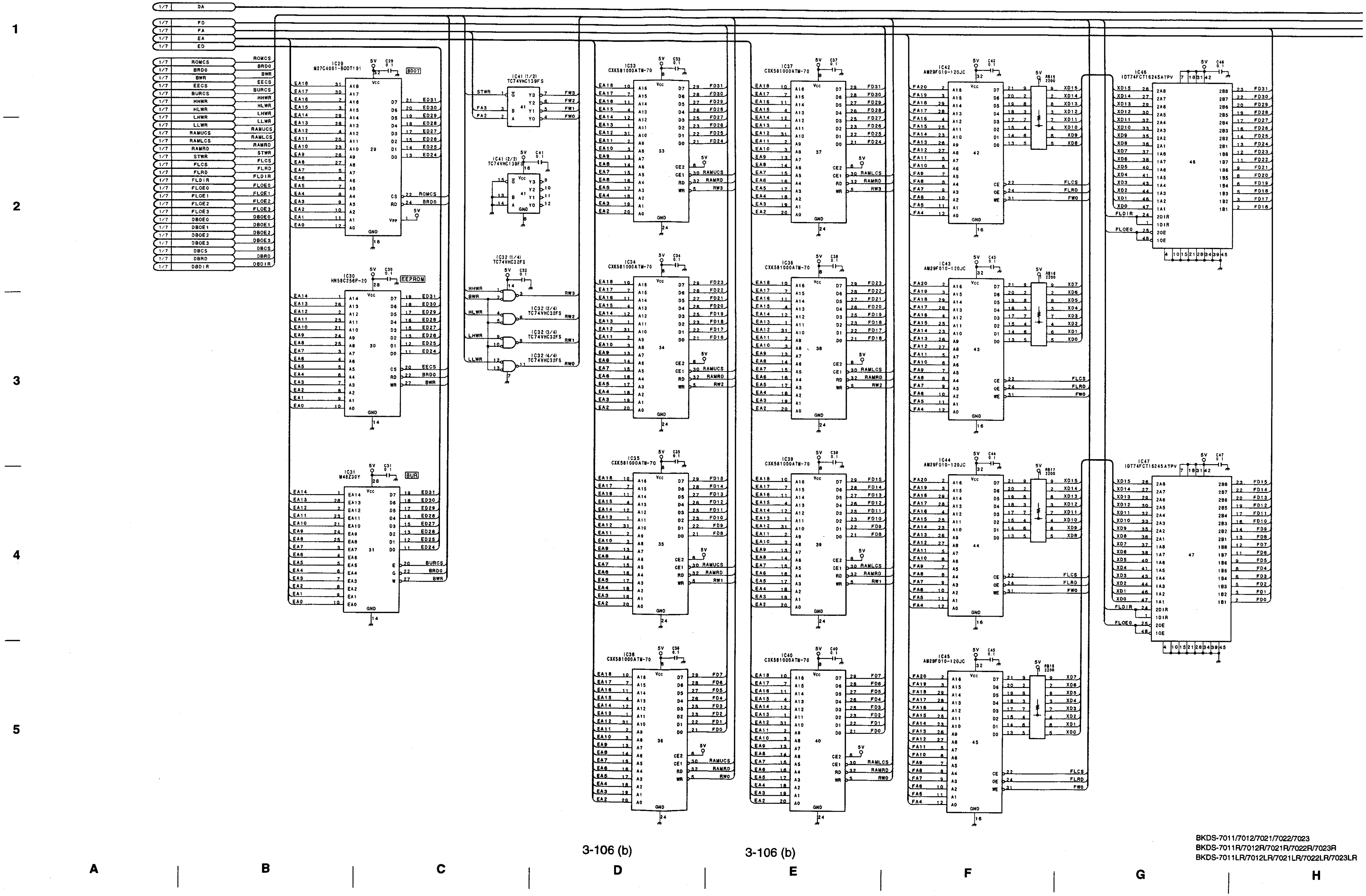

3-106 (b)

BKDS-7011/7012/7021/7022/7023
BKDS-7011R/7012R/7021R/7022R/7023R
BKDS-7011LR/7012LR/7021LR/7022LR/7023LR

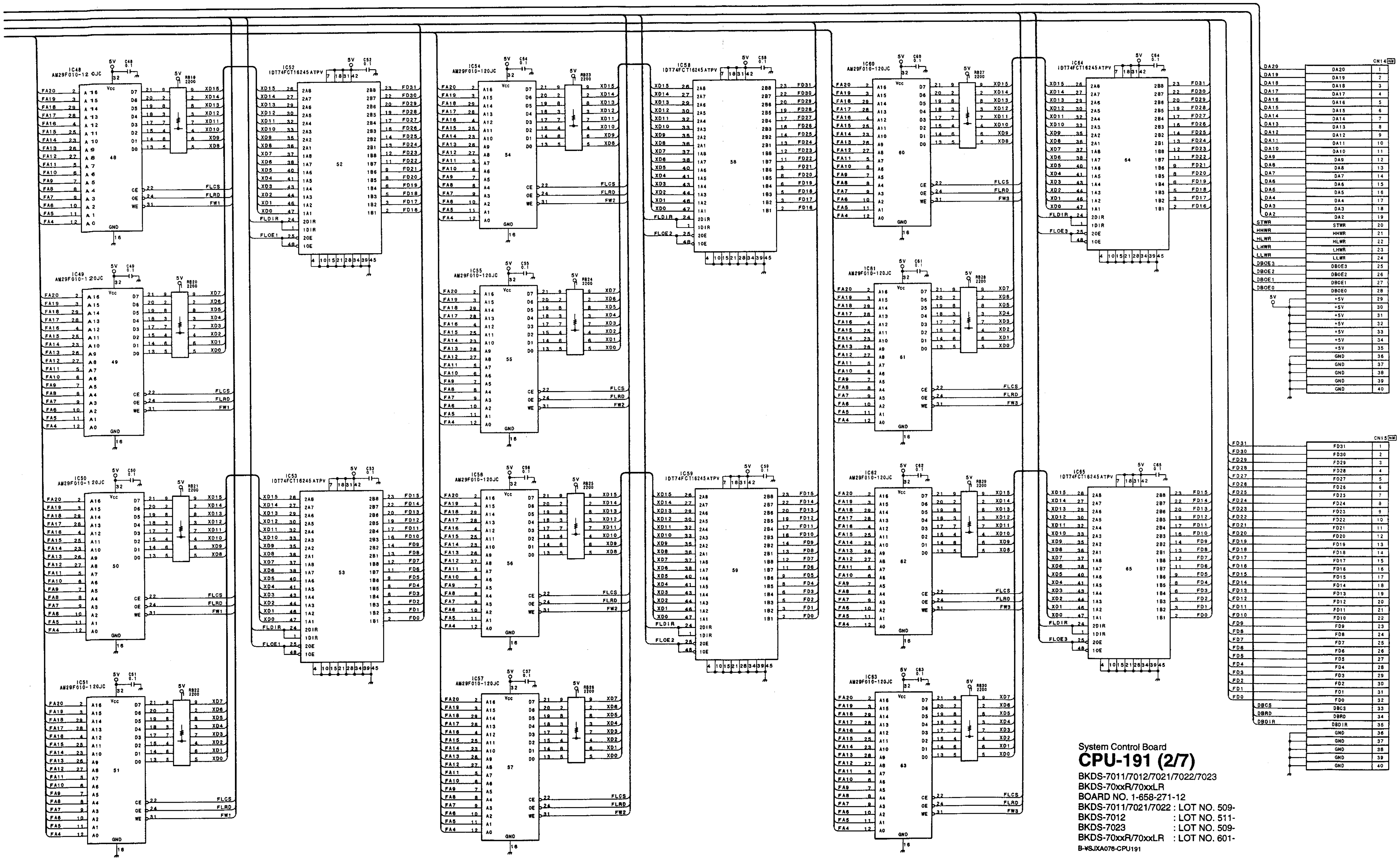

System Control Board
CPU-191 (2/7)
BKDS-7011/7012/7021/7022/7023
BKDS-70xxR/70xxLR
BOARD NO. 1-658-271-12
BKDS-7011/7021/7022 : LOT NO. 509-
BKDS-7012 : LOT NO. 511-
BKDS-7023 : LOT NO. 509-
BKDS-70xxR/70xxLR : LOT NO. 601-
B-¥SJXA076-CPU191

BKDS-7011/7012/7021/7022/7023
BKDS-7011R/7012R/7021R/7022R/7023R
BKDS-7011LR/7012LR/7021LR/7022LR/7023LR

BKDS-7011/7021/7022	(SY) : S/N 10016 and Higher
BKDS-7012/7023	(SY) : S/N 10001 and Higher
BKDS-7011R/7012R/7021R/7022R/7023R	(SY) : S/N 10001 and Higher
BKDS-7011LR/7012LR/7021LR/7022LR/7023LR	(SY) : S/N 10001 and Higher

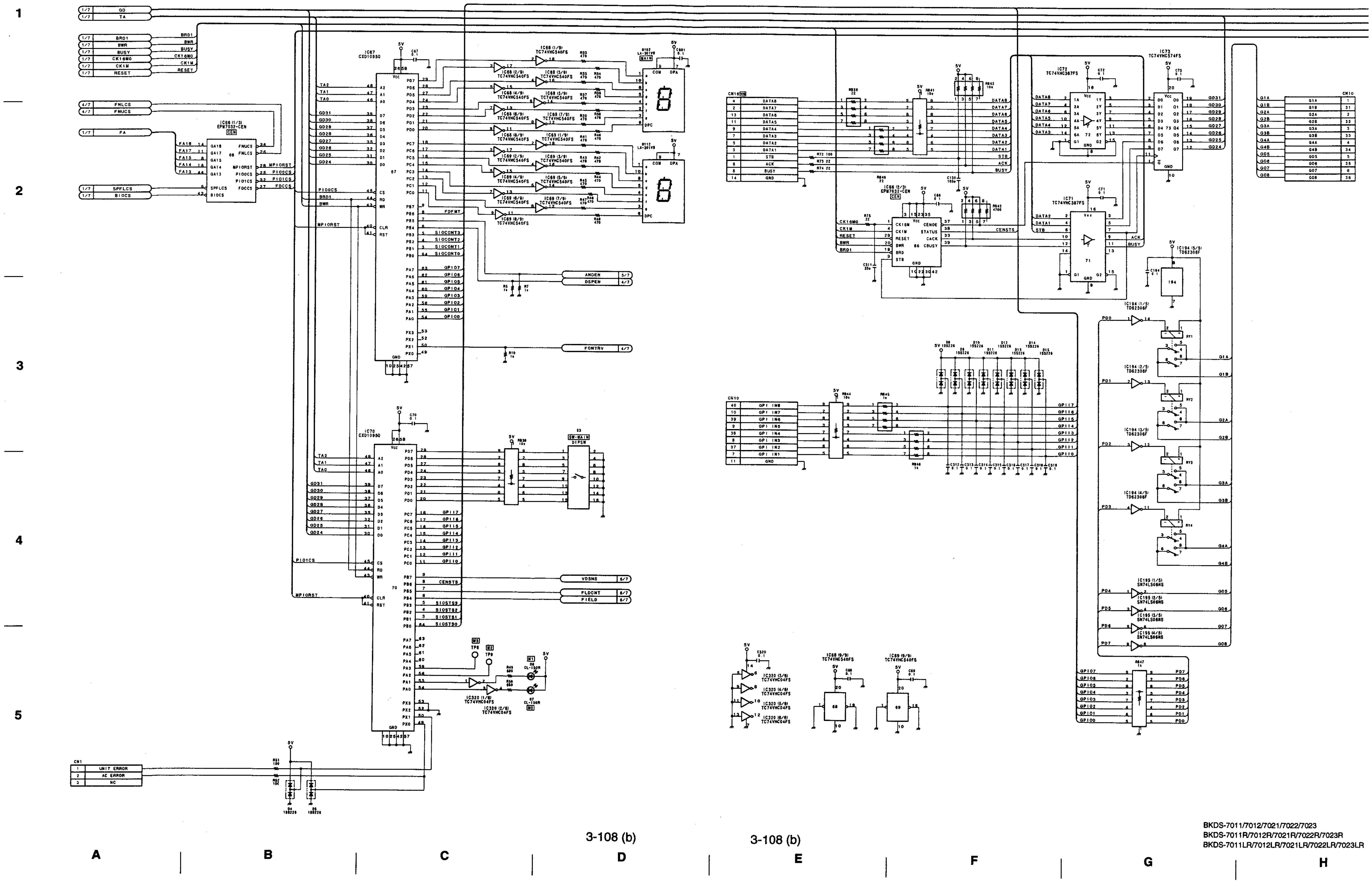

BKDS-7011/7012/7021/7022/7023
BKDS-7011R/7012R/7021R/7022R/7023R
BKDS-7011LR/7012LR/7021LR/7022LR/7023LR

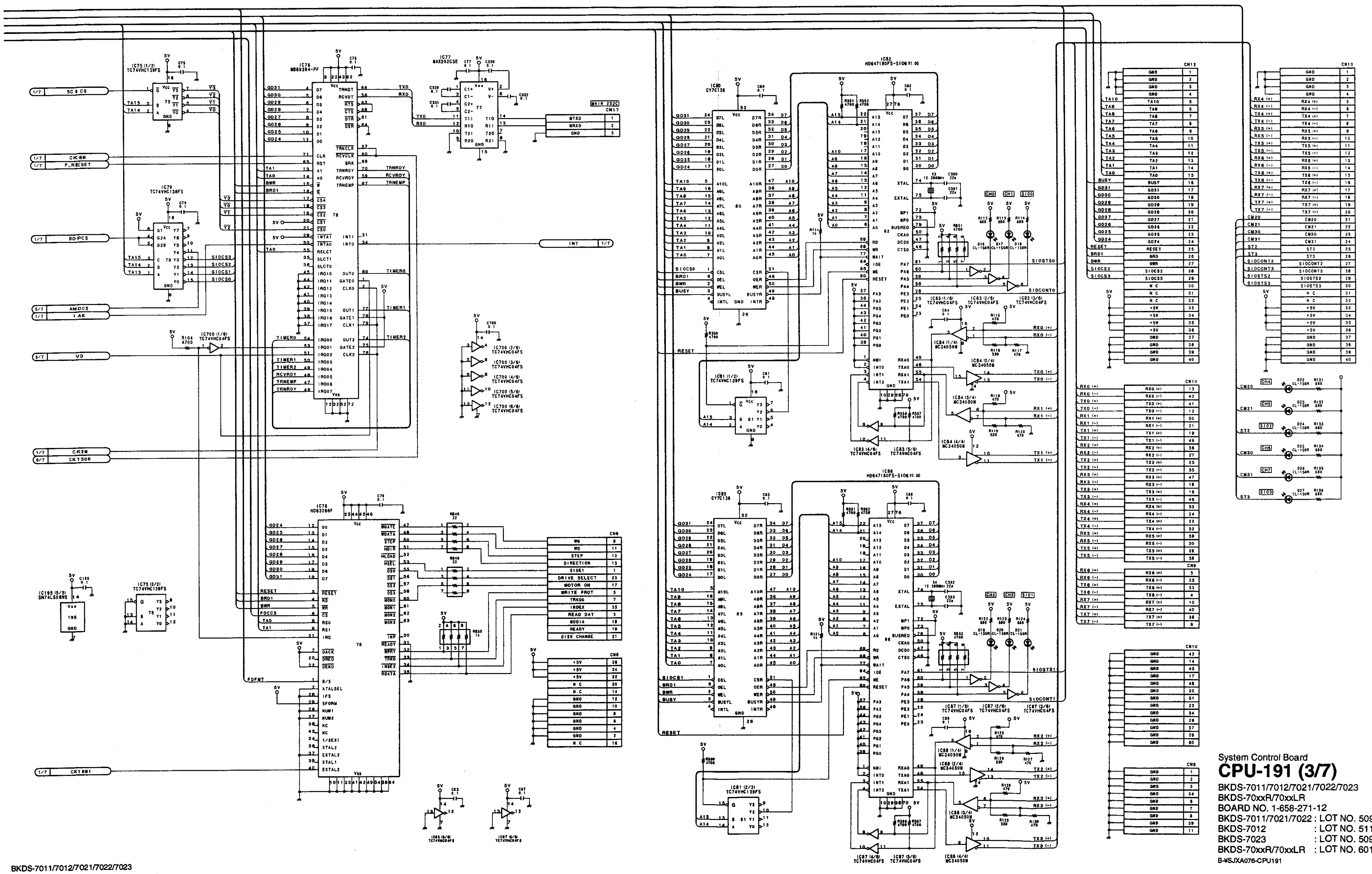

System Control Board
CPU-191 (3/7)

BKDS-7011/7012/7021/7022/7023
BKDS-70xxR/70xxLR
BOARD NO. 1-658-271-12
BKDS-7011/7021/7022 : LOT NO. 509-
BKDS-7012 : LOT NO. 511-
BKDS-7023 : LOT NO. 509-
BKDS-70xxR/70xxLR : LOT NO. 601-
B-¥SJXA076-CPU191

BKDS-7011/7012/7021/7022/7023
BKDS-7011R/7012R/7021R/7022R/7023R
BKDS-7011LR/7012LR/7021LR/7022LR/7023LR

I	J	K	L	M	N	O	P

1 2 3 4 5

BKDS-7011/7021/7022	(SY) : S/N 10016 and Higher
BKDS-7012/7023	(SY) : S/N 10001 and Higher
BKDS-7011R/7012R/7021R/7022R/7023R	(SY) : S/N 10001 and Higher
BKDS-7011LR/7012LR/7021LR/7022LR/7023LR	(SY) : S/N 10001 and Higher

1

2

3

4

5

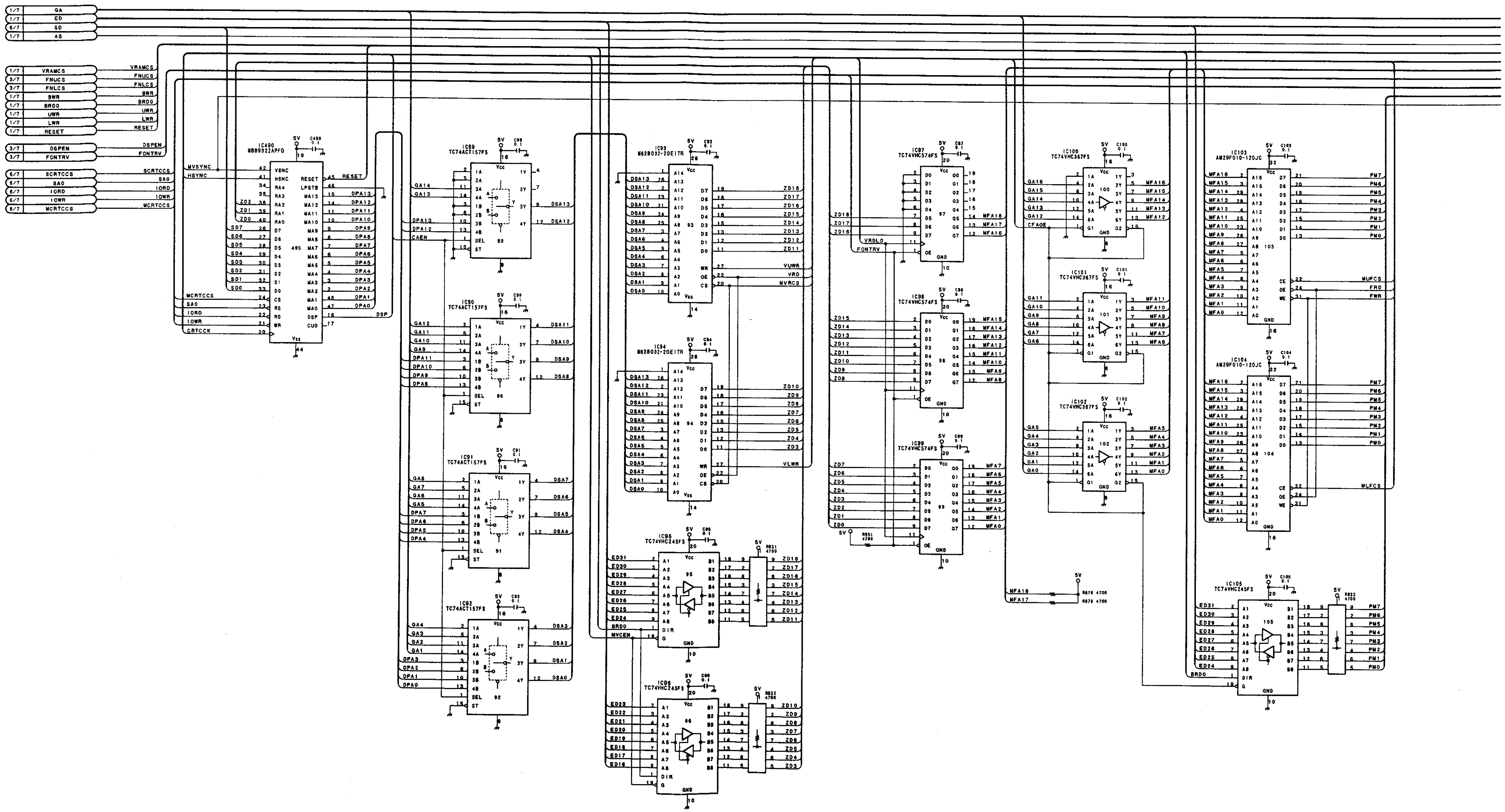

BKDS-7011/7012/7021/7022/7023
BKDS-7011R/7012R/7021R/7022R/7023R
BKDS-7011LR/7012LR/7021LR/7022LR/7023LR

A | B | C | D | E | F | G | H

1

2

3

4

5

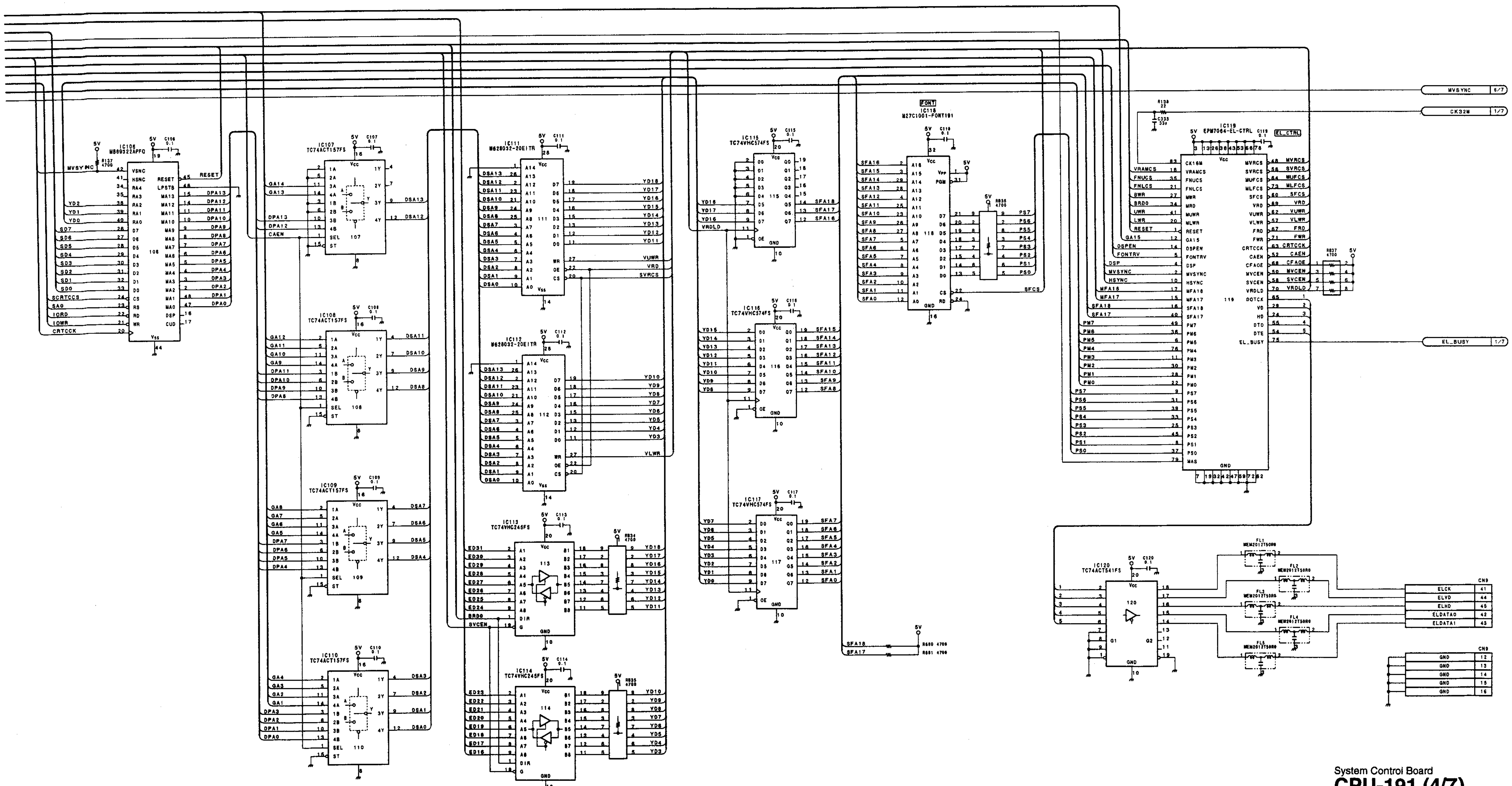

System Control Board
CPU-191 (4/7)
BKDS-7011/7012/7021/7022/7023
BKDS-70xxR/70xxLR
BOARD NO. 1-658-271-12
BKDS-7011/7021/7022 : LOT NO. 509-
BKDS-7012 : LOT NO. 511-
BKDS-7023 : LOT NO. 509-
BKDS-70xxR/70xxLR : LOT NO. 601-
B-¥SJXA076-CPU191

BKDS-7011/7012/7021/7022/7023
BKDS-7011R/7012R/7021R/7022R/7023R
BKDS-7011LR/7012LR/7021LR/7022LR/7023LR

I J K L M N O P

BKDS-7011/7021/7022	(SY) : S/N 10016 and Higher
BKDS-7012/7023	(SY) : S/N 10001 and Higher
BKDS-7011R/7012R/7021R/7022R/7023R	(SY) : S/N 10001 and Higher
BKDS-7011LR/7012LR/7021LR/7022LR/7023LR	(SY) : S/N 10001 and Higher

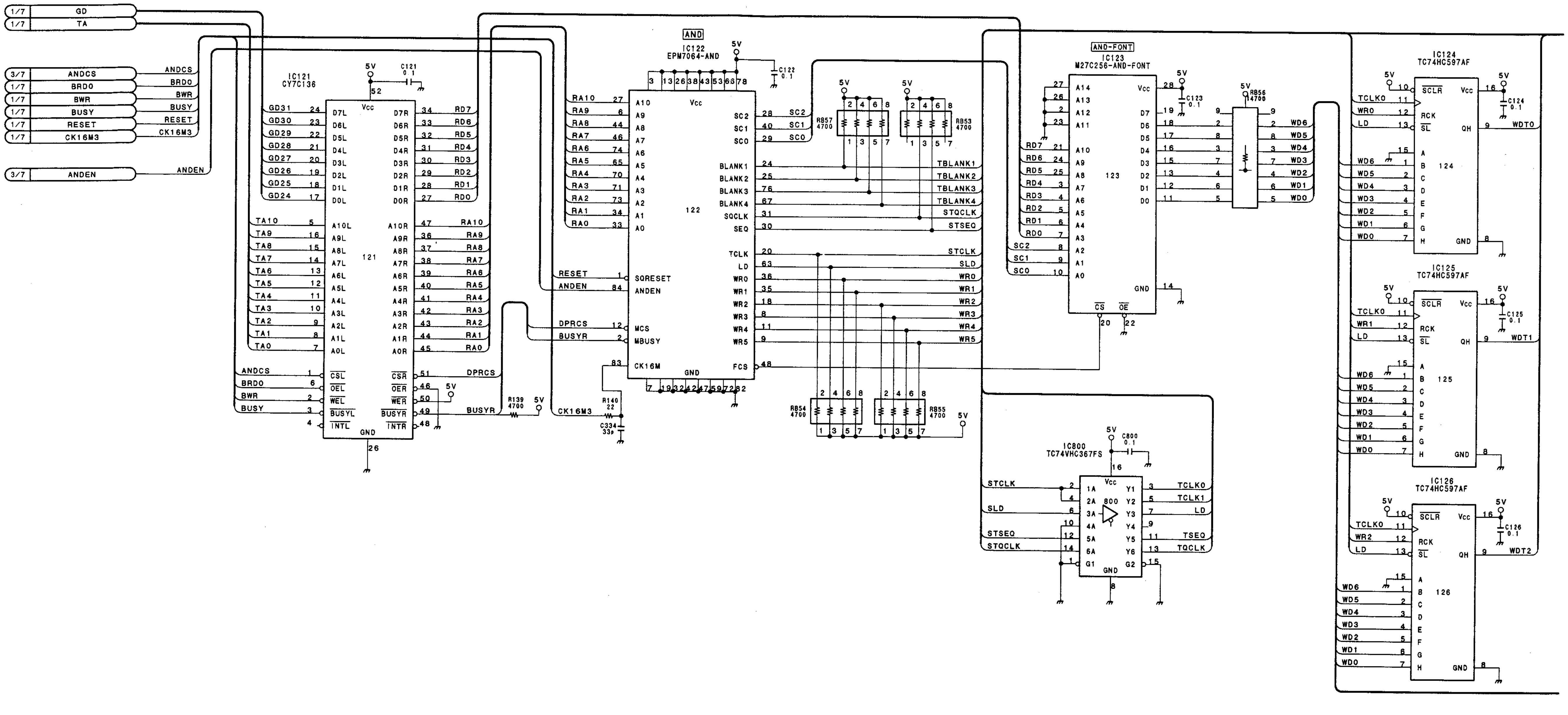

A B C D E F G H

1 2 3 4 5

BKDS-7011/7012/7021/7022/7023
BKDS-7011R/7012R/7021R/7022R/7023R
BKDS-7011LR/7012LR/7021LR/7022LR/7023LR

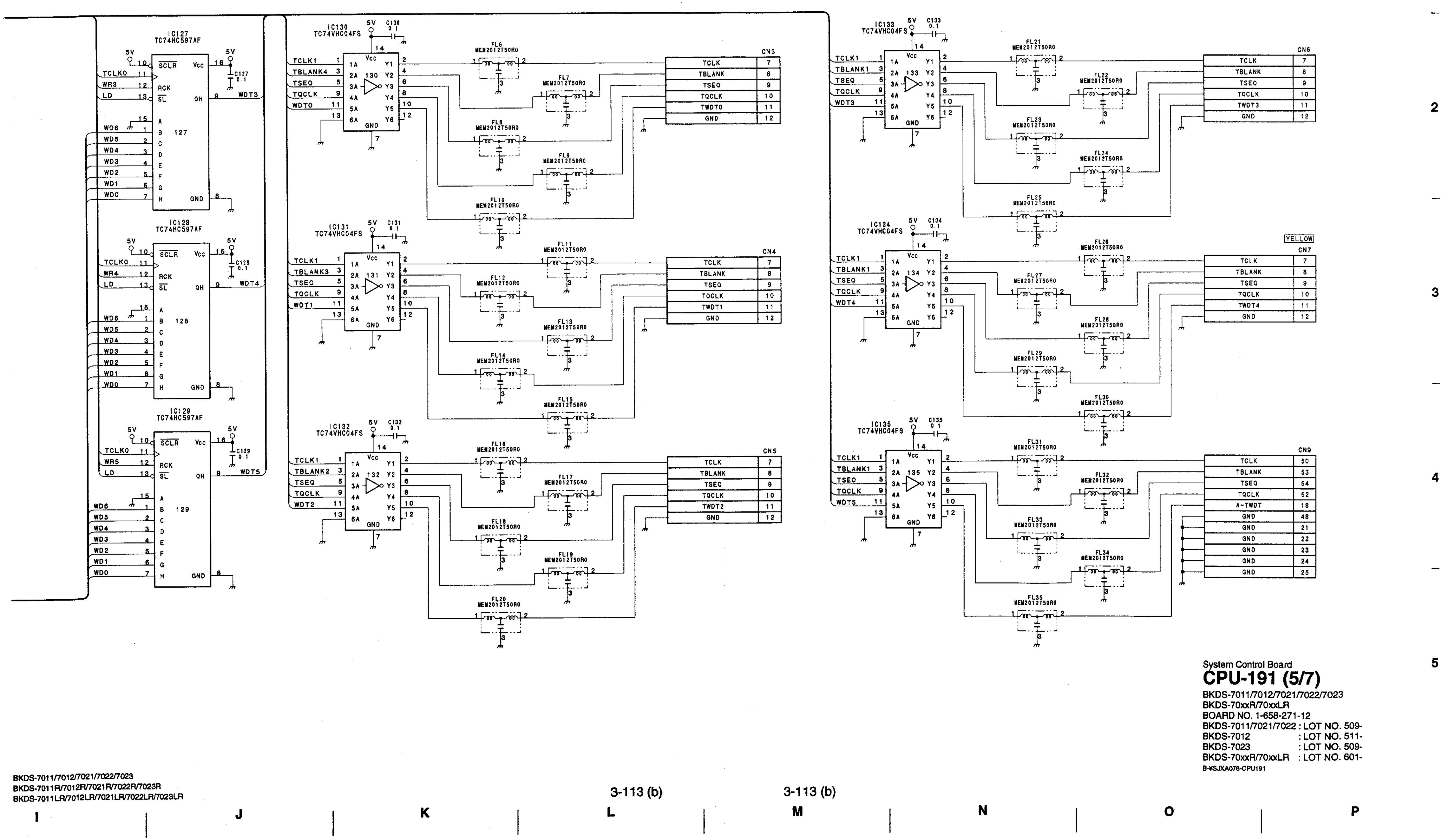

System Control Board
CPU-191 (5/7)
BKDS-7011/7012/7021/7022/7023
BKDS-70xxR/70xxLR
BOARD NO. 1-658-271-12
BKDS-7011/7021/7022 : LOT NO. 509-
BKDS-7012 : LOT NO. 511-
BKDS-7023 : LOT NO. 509-
BKDS-70xxR/70xxLR : LOT NO. 601-
B-¥SJXA076-CPU191

BKDS-7011/7012/7021/7022/7023
BKDS-7011R/7012R/7021R/7022R/7023R
BKDS-7011LR/7012LR/7021LR/7022LR/7023LR

BKDS-7011/7021/7022	(SY) : S/N 10016 and Higher
BKDS-7012/7023	(SY) : S/N 10001 and Higher
BKDS-7011R/7012R/7021R/7022R/7023R	(SY) : S/N 10001 and Higher
BKDS-7011LR/7012LR/7021LR/7022LR/7023LR	(SY) : S/N 10001 and Higher

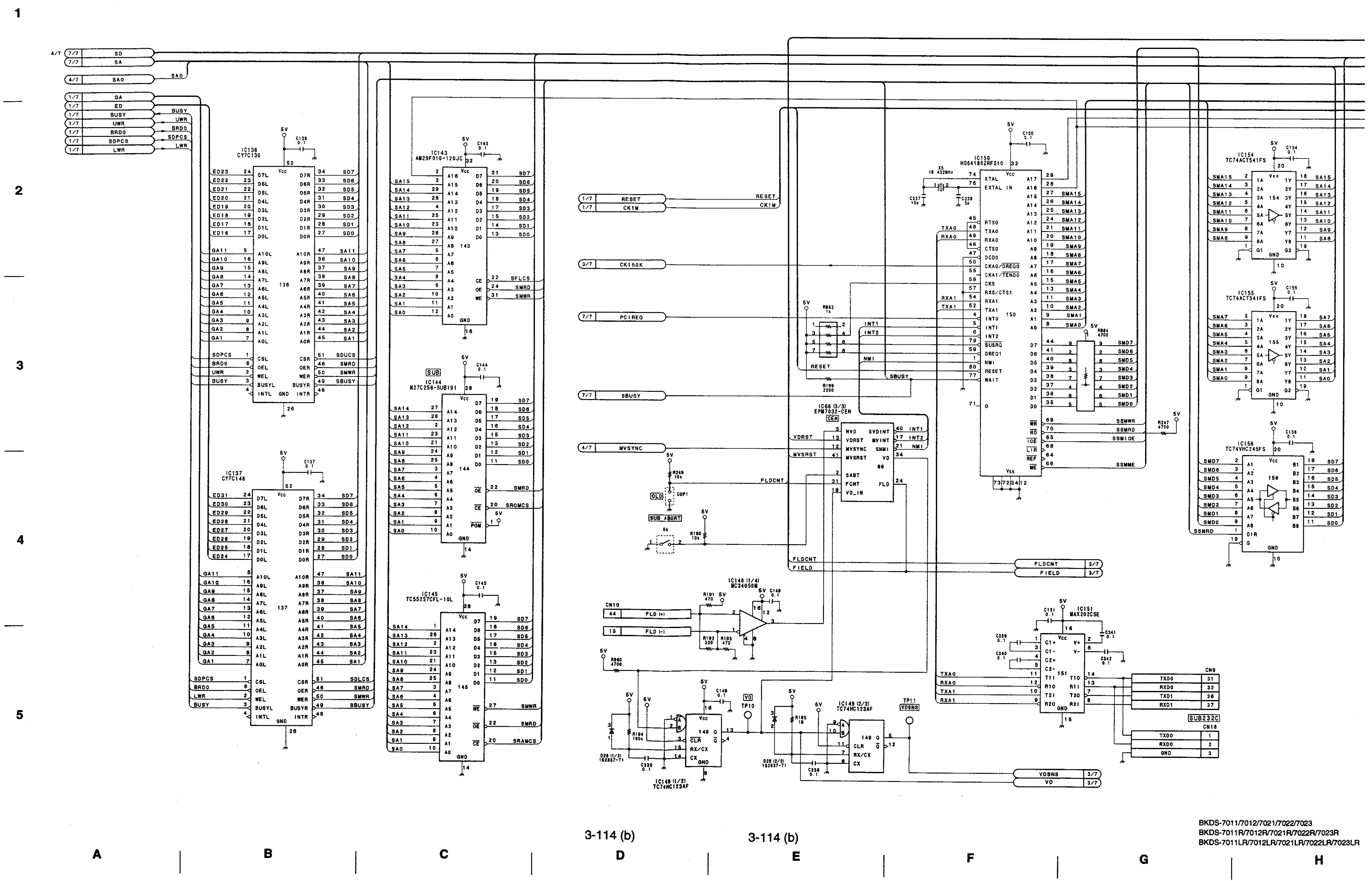

BKDS-7011/7012/7021/7022/7023
BKDS-7011R/7012R/7021R/7022R/7023R
BKDS-7011LR/7012LR/7021LR/7022LR/7023LR

1

2

3

4

5

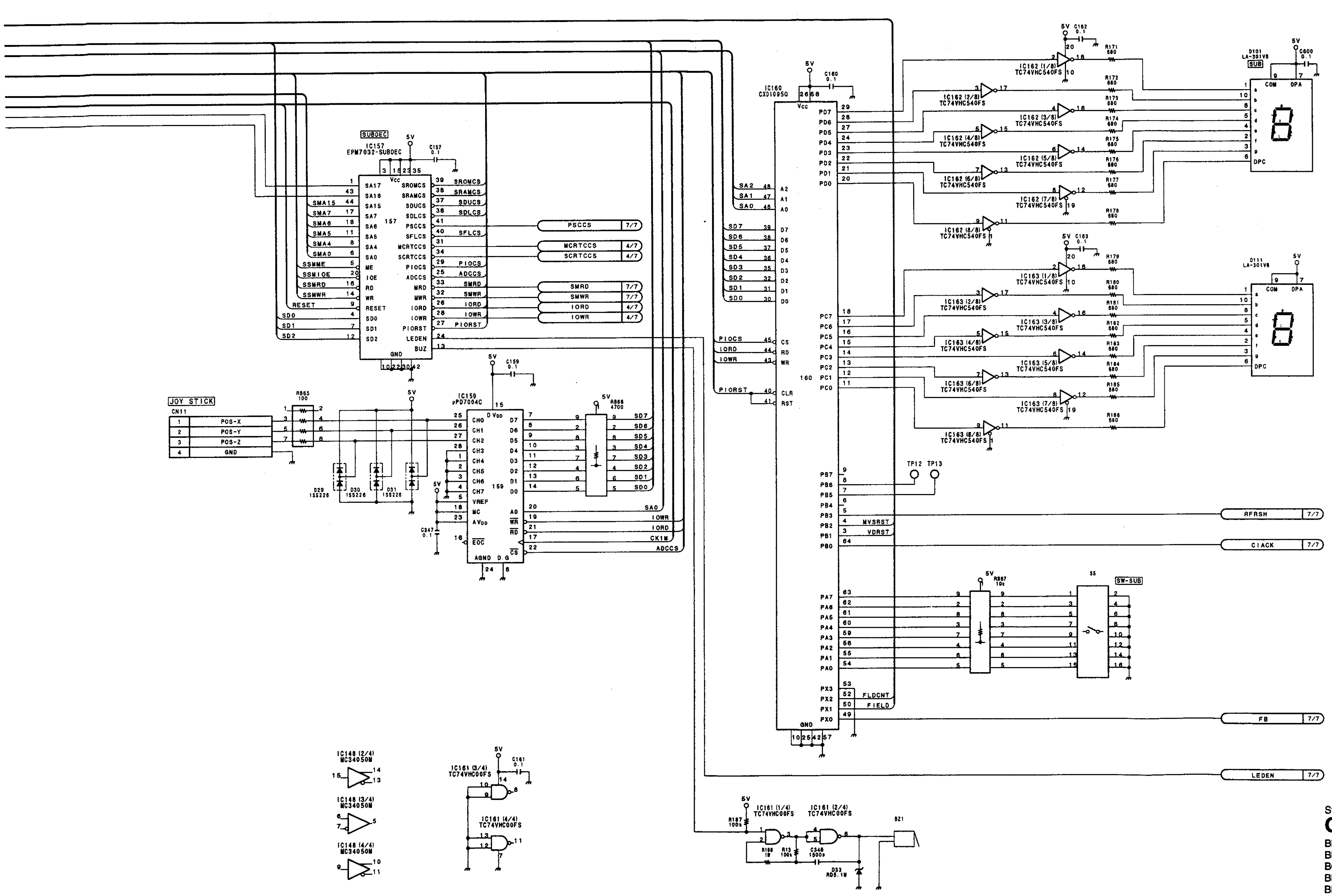

System Control Board
CPU-191 (6/7)
BKDS-7011/7012/7021/7022/7023
BKDS-70xxR/70xxLR
BOARD NO. 1-658-271-12
BKDS-7011/7021/7022 : LOT NO. 509-
BKDS-7012 : LOT NO. 511-
BKDS-7023 : LOT NO. 509-
BKDS-70xxR/70xxLR : LOT NO. 601-
B-VSJXA076-CPU191

BKDS-7011/7012/7021/7022/7023
BKDS-7011R/7012R/7021R/7022R/7023R
BKDS-7011LR/7012LR/7021LR/7022LR/7023LR

I | J | K | L | M | N | O | P

BKDS-7011/7021/7022	(SY) : S/N 10016 and Higher
BKDS-7012/7023	(SY) : S/N 10001 and Higher
BKDS-7011R/7012R/7021R/7022R/7023R	(SY) : S/N 10001 and Higher
BKDS-7011LR/7012LR/7021LR/7022LR/7023LR	(SY) : S/N 10001 and Higher

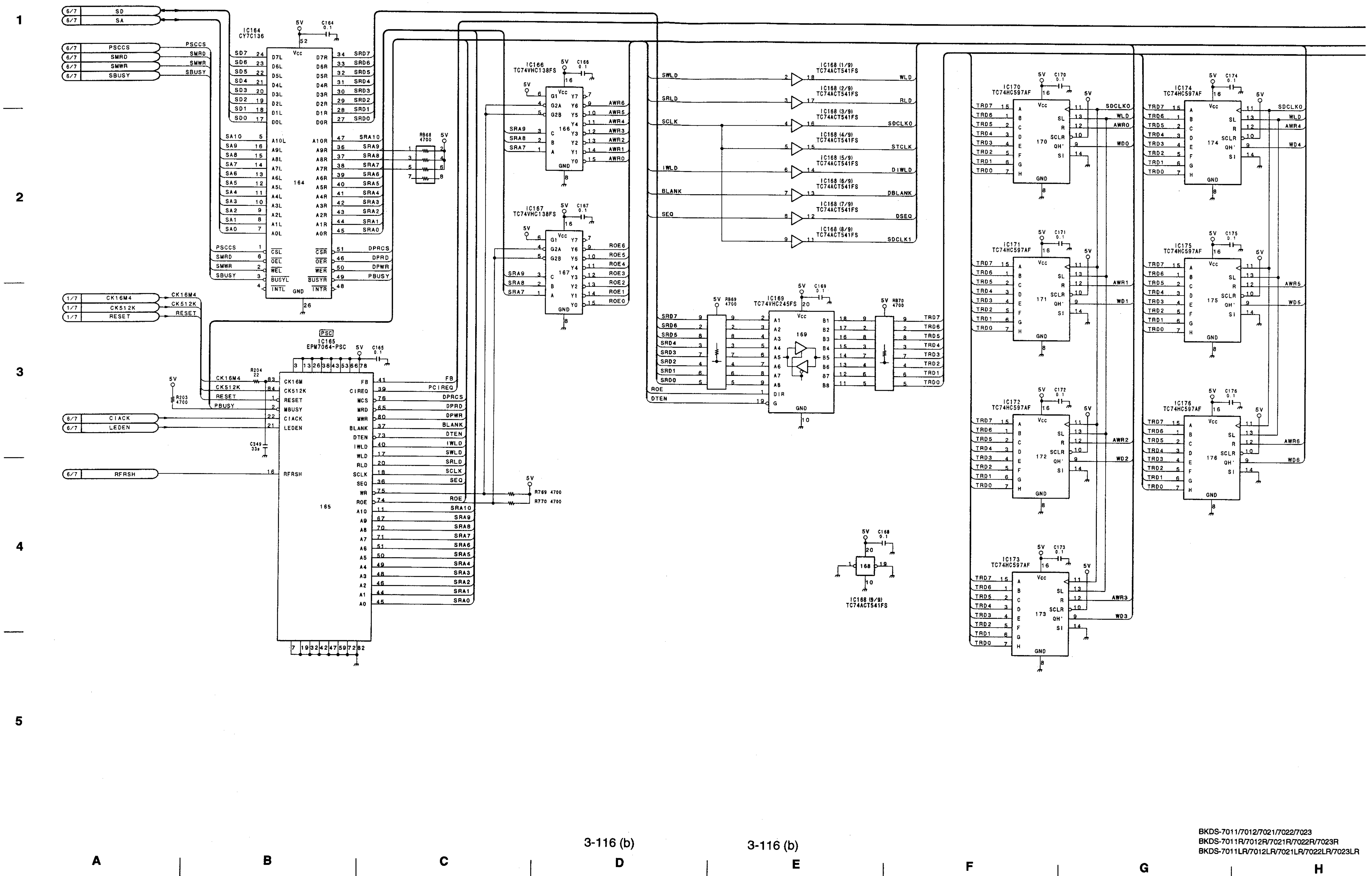

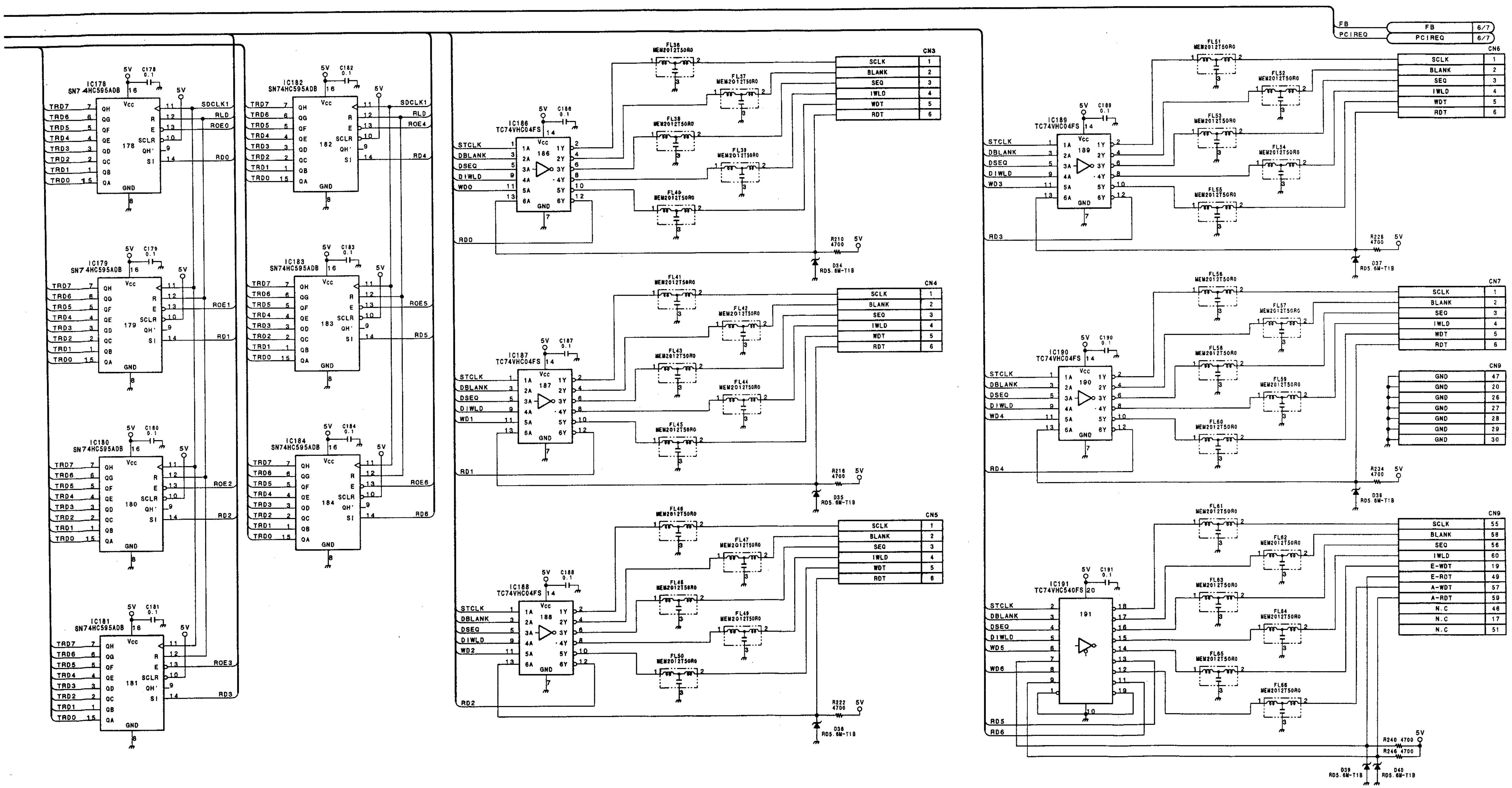

System Control Board
CPU-191 (7/7)
BKDS-7011/7012/7021/7022/7023
BKDS-70xxR/70xxLR
BOARD NO. 1-658-271-12
BKDS-7011/7021/7022 : LOT NO. 509-
BKDS-7012 : LOT NO. 511-
BKDS-7023 : LOT NO. 509-
BKDS-70xxR/70xxLR : LOT NO. 601-
B-¥SJXA076-CPU191

BKDS-7011/7012/7021/7022/7023
BKDS-7011R/7012R/7021R/7022R/7023R
BKDS-7011LR/7012LR/7021LR/7022LR/7023LR

BKDS-7011 (SY) : S/N 10001 through 10015
BKDS-7021 (SY) : S/N 10001 through 10015
BKDS-7022 (SY) : S/N 10001 through 10015

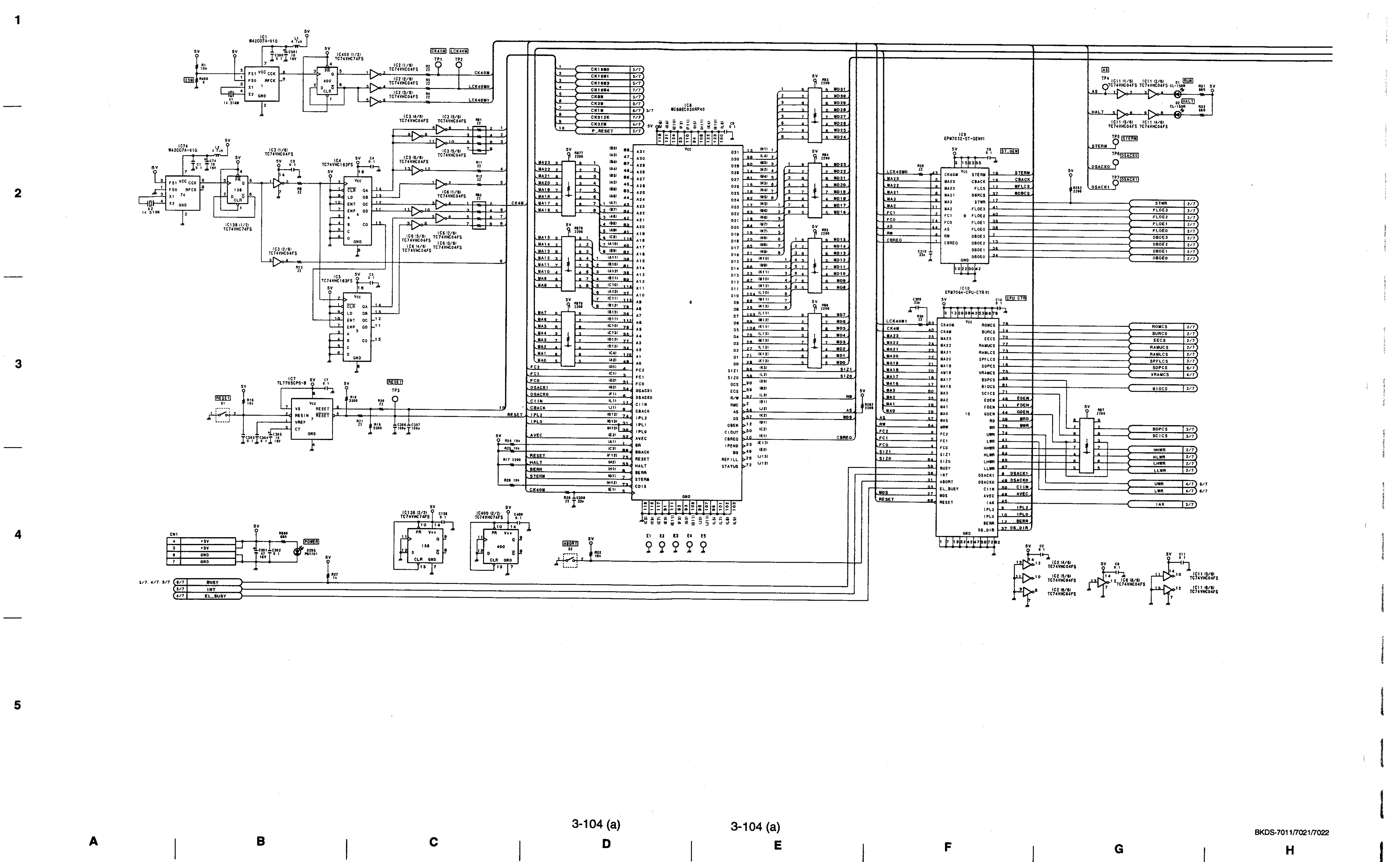

1

2

3

4

5

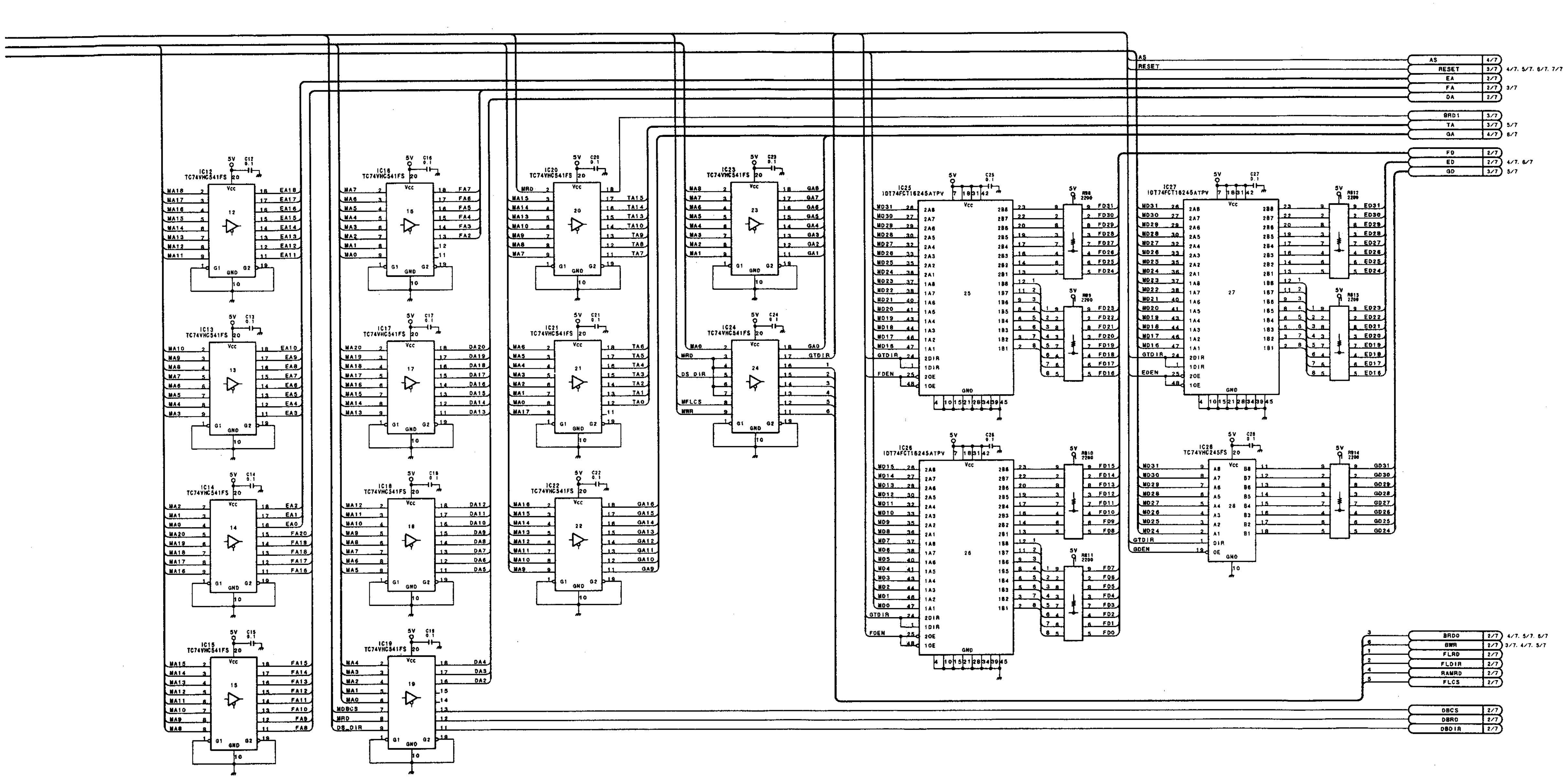

System Control Board
CPU-191 (1/7)
BKDS-7011/7021/7022
BOARD NO. 1-658-271-11
BKDS-7011 : LOT NO. 505-508
BKDS-7021 : LOT NO. 505-508
BKDS-7022 : LOT NO. 505-508
B-VSJXA078-CPU191-11

I | J | K | L | M | N | O | P

BKDS-7011 (SY) : S/N 10001 through 10015
BKDS-7021 (SY) : S/N 10001 through 10015
BKDS-7022 (SY) : S/N 10001 through 10015

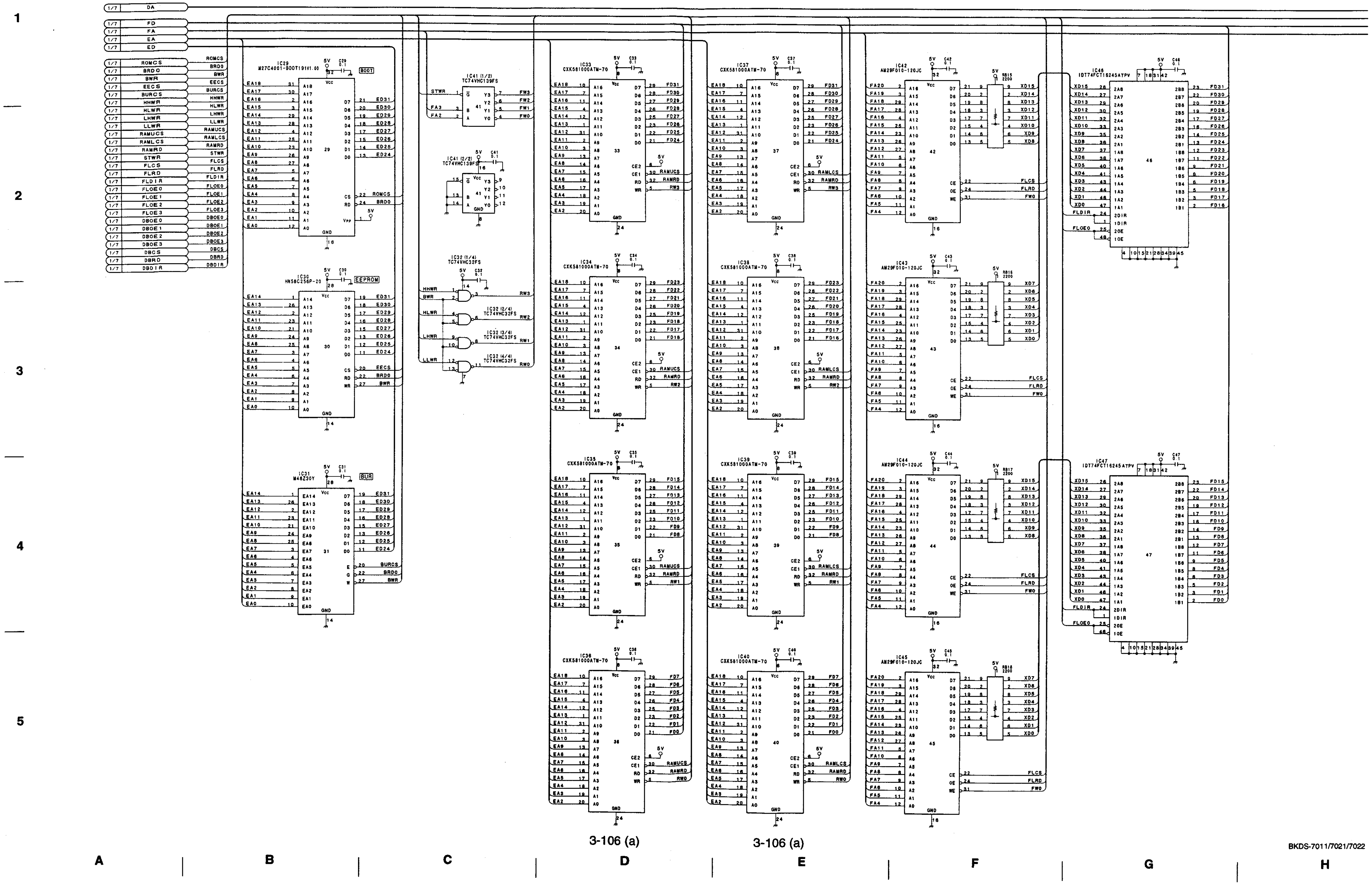

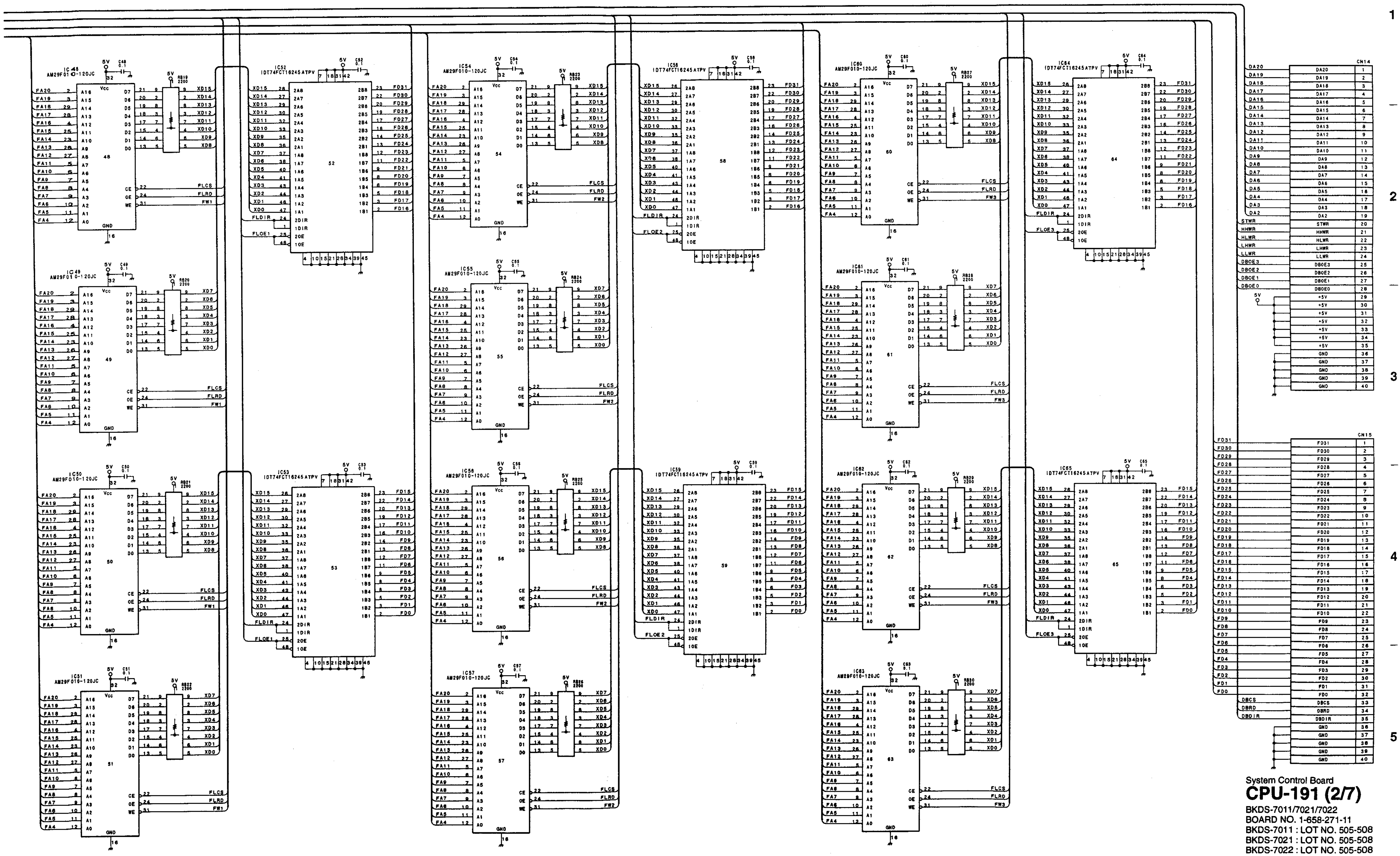

System Control Board
CPU-191 (2/7)
BKDS-7011/7021/7022
BOARD NO. 1-658-271-11
BKDS-7011 : LOT NO. 505-508
BKDS-7021 : LOT NO. 505-508
BKDS-7022 : LOT NO. 505-508
B-¥SJXA076-CPU191-11

I J K L M N O P

CPU-191 (3/7) System Control Board

BKDS-7011 (SY) : S/N 10001 through 10015
BKDS-7021 (SY) : S/N 10001 through 10015
BKDS-7022 (SY) : S/N 10001 through 10015

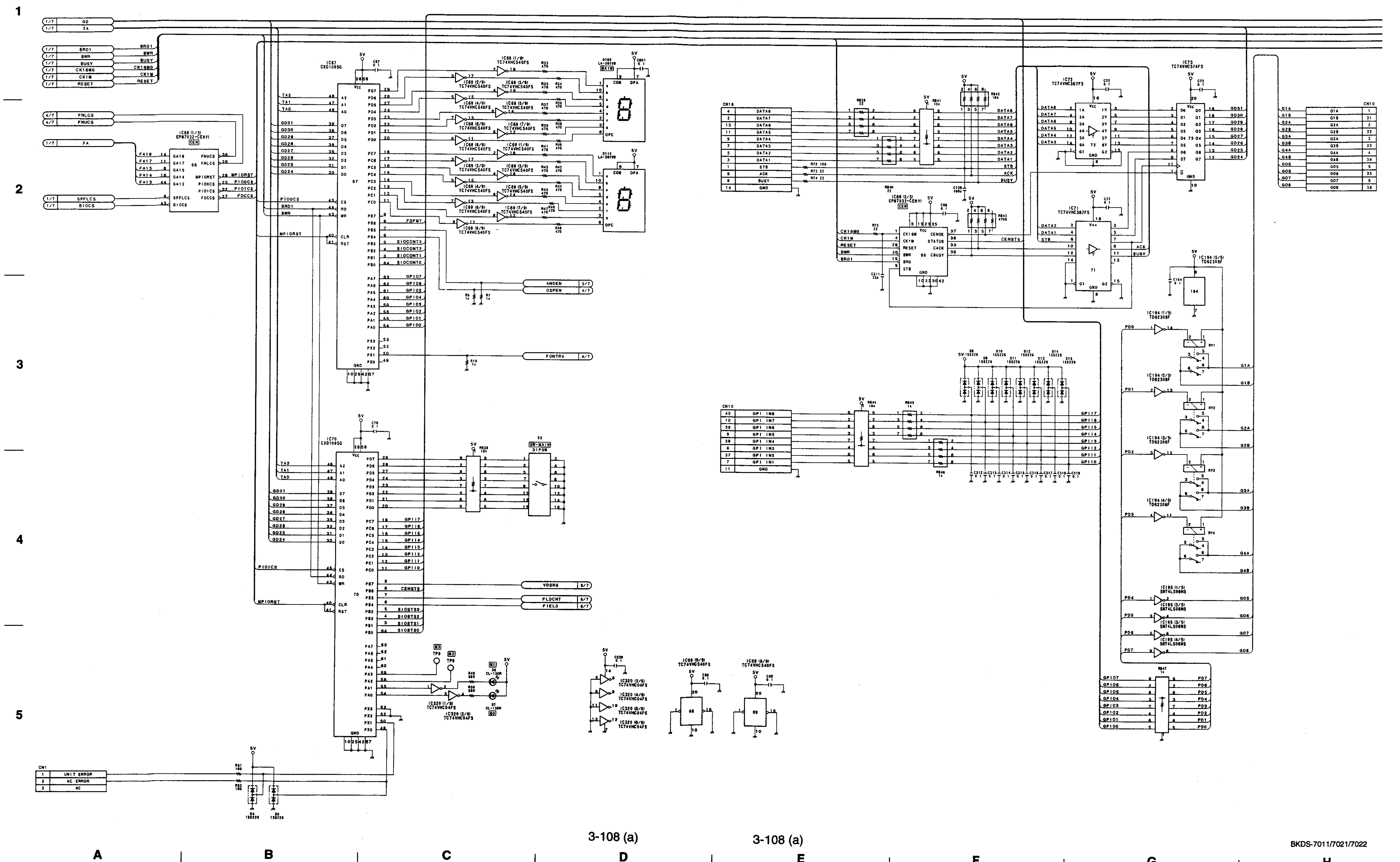

3-108 (a)

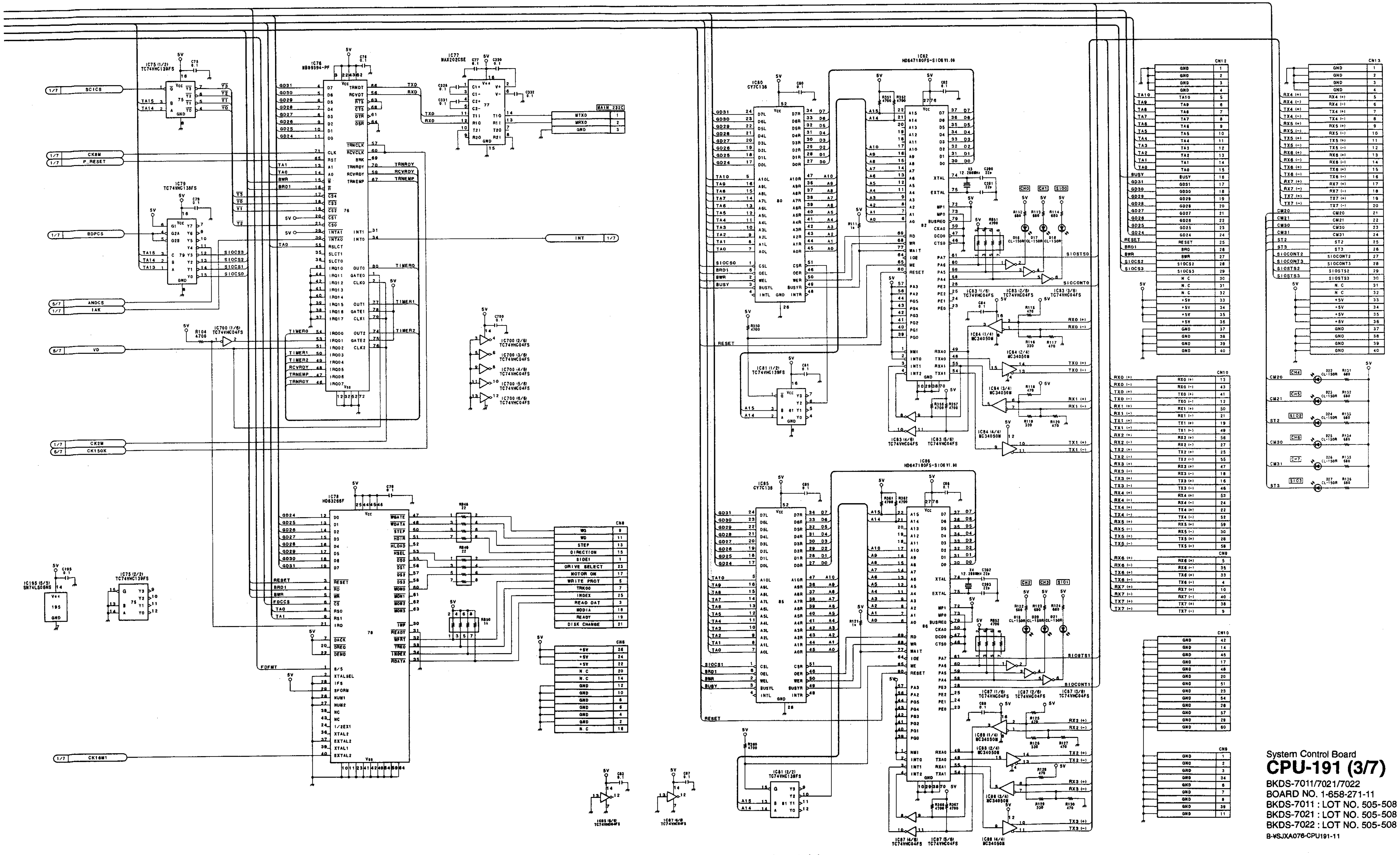

System Control Board
CPU-191 (3/7)
BKDS-7011/7021/7022
BOARD NO. 1-658-271-11
BKDS-7011 : LOT NO. 505-508
BKDS-7021 : LOT NO. 505-508
BKDS-7022 : LOT NO. 505-508
B-WSJXA076-CPU191-11

BKDS-7011 (SY) : S/N 10001 through 10015
BKDS-7021 (SY) : S/N 10001 through 10015
BKDS-7022 (SY) : S/N 10001 through 10015

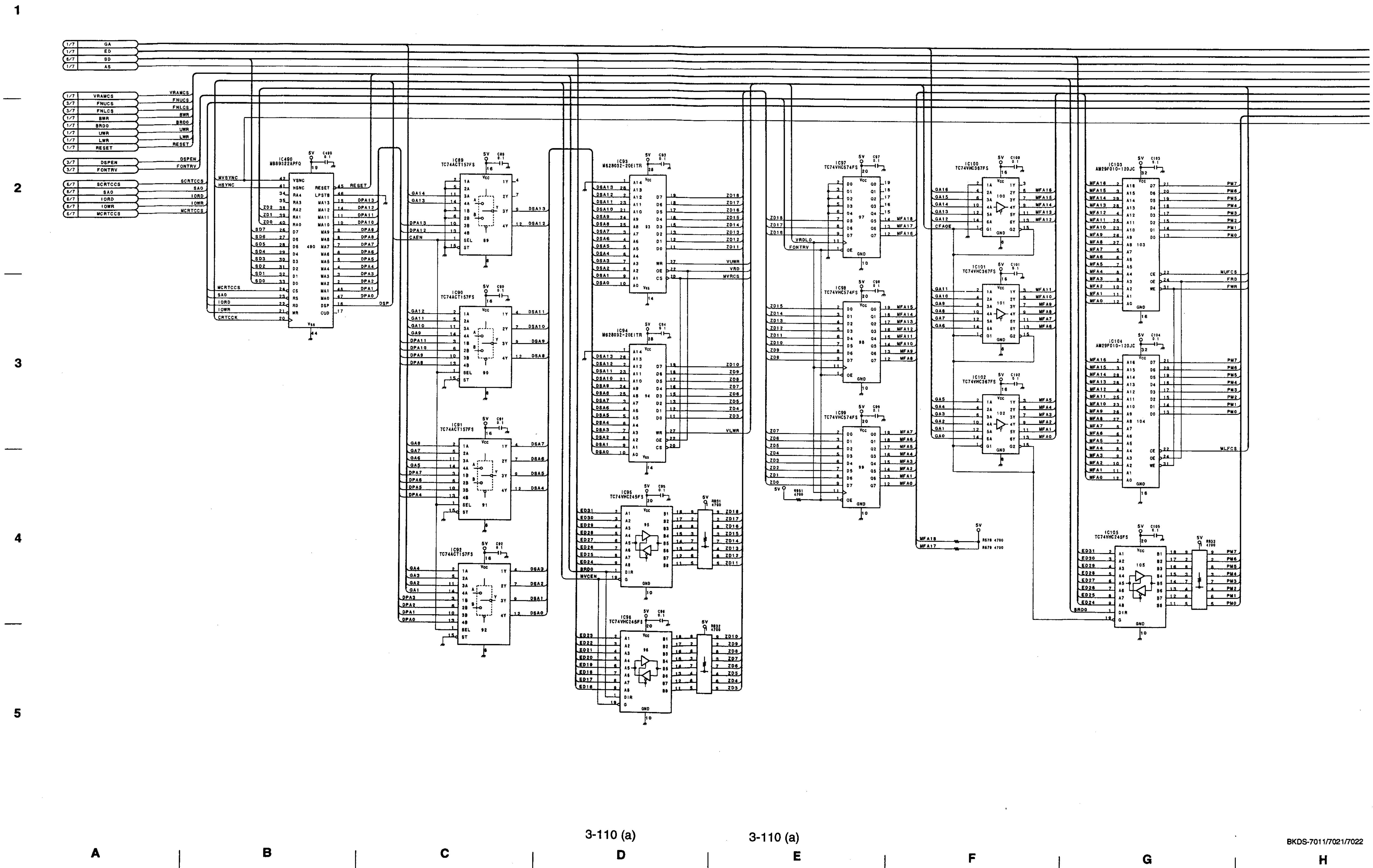

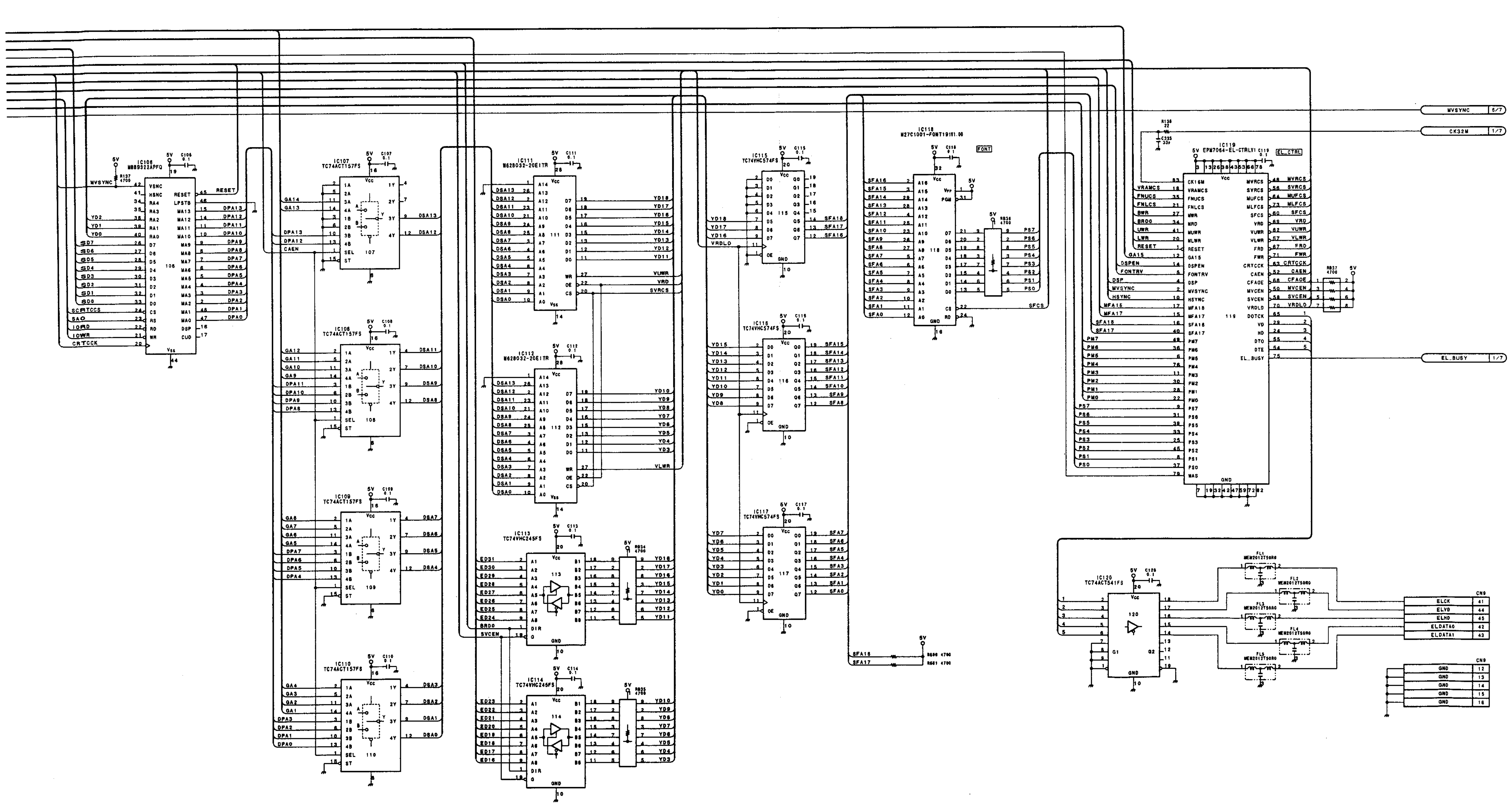

System Control Board
CPU-191 (4/7)
BKDS-7011/7021/7022
BOARD NO. 1-658-271-11
BKDS-7011 : LOT NO. 505-508
BKDS-7021 : LOT NO. 505-508
BKDS-7022 : LOT NO. 505-508
B-VSJXA076-CPU191-11

CPU-191 (5/7) System Control Board

BKDS-7011 (SY) : S/N 10001 through 10015
BKDS-7021 (SY) : S/N 10001 through 10015
BKDS-7022 (SY) : S/N 10001 through 10015

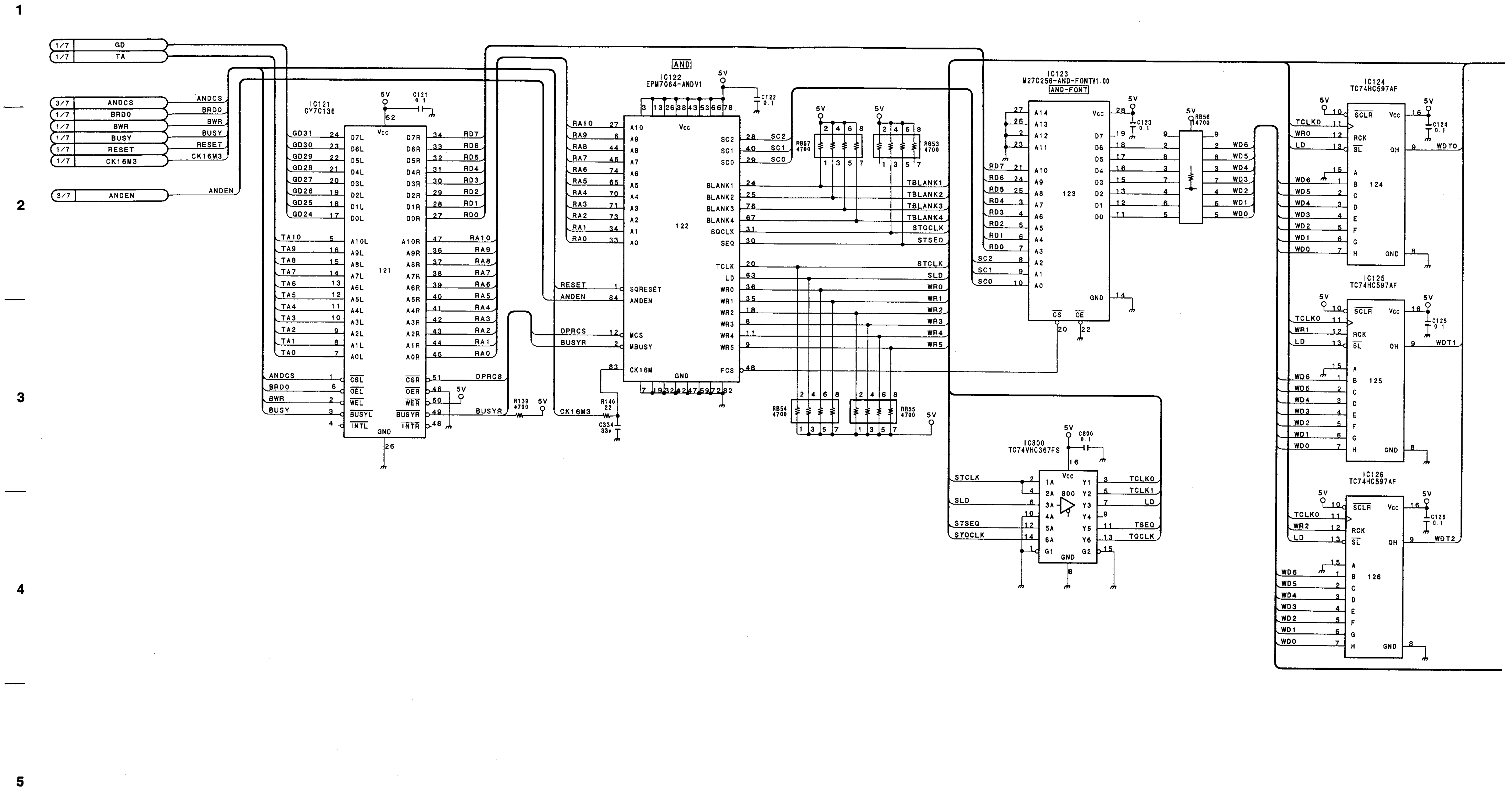

3-112 (a)

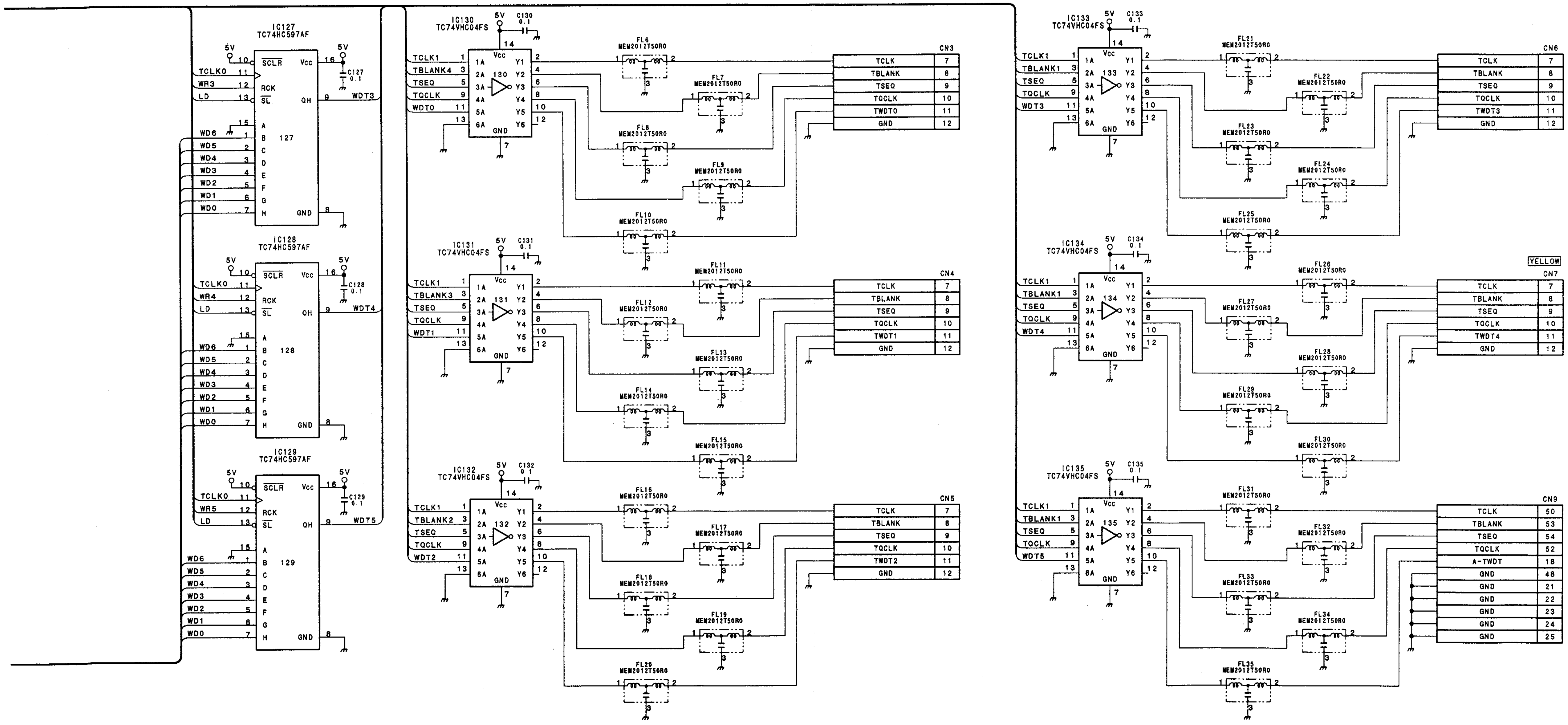

1
2
3
4
5

System Control Board
CPU-191 (5/7)
BKDS-7011/7021/7022
BOARD NO. 1-658-271-11
BKDS-7011 : LOT NO. 505-508
BKDS-7021 : LOT NO. 505-508
BKDS-7022 : LOT NO. 505-508
B-¥SJXA076-CPU191-11

I J K L M N O P

CPU-191 (6/7) System Control Board

BKDS-7011 (SY) : S/N 10001 through 10015
BKDS-7021 (SY) : S/N 10001 through 10015
BKDS-7022 (SY) : S/N 10001 through 10015

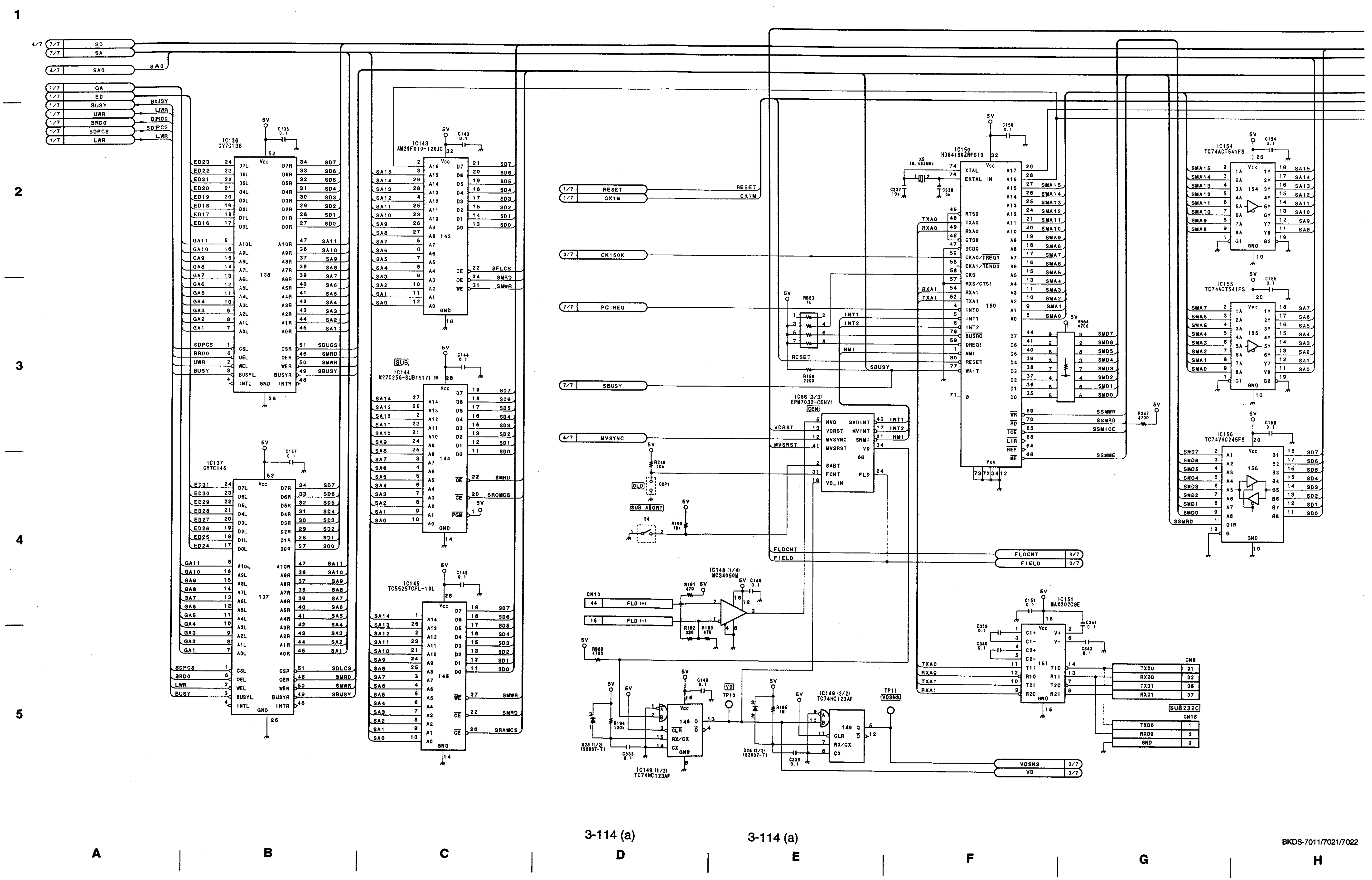

3-114 (a)

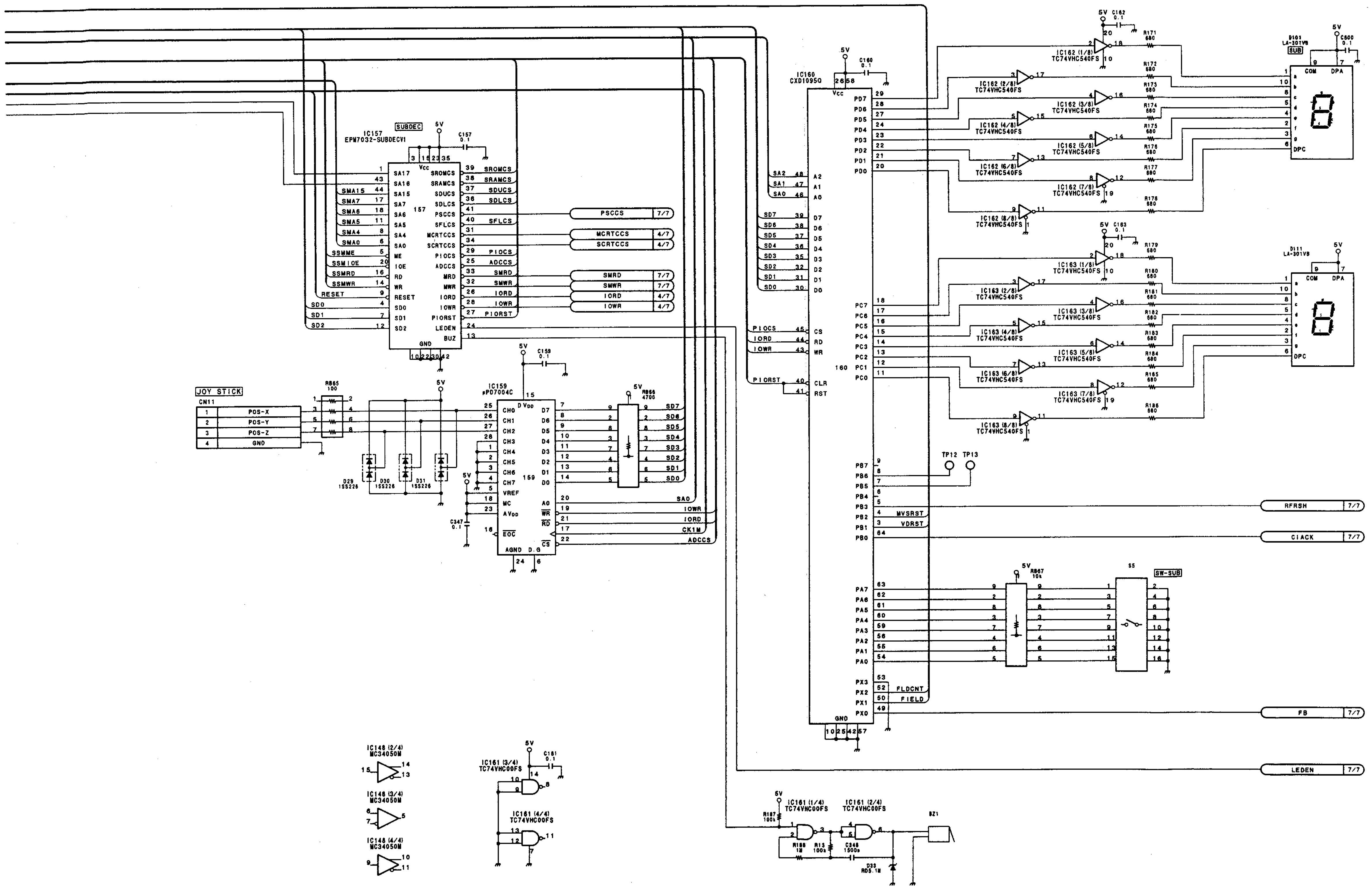

System Control Board
CPU-191 (6/7)
BKDS-7011/7021/7022
BOARD NO. 1-658-271-11
BKDS-7011 : LOT NO. 505-508
BKDS-7021 : LOT NO. 505-508
BKDS-7022 : LOT NO. 505-508
B-¥SJXA076-CPU191-11

CPU-191 (7/7) System Control Board

BKDS-7011 (SY) : S/N 10001 through 10015
BKDS-7021 (SY) : S/N 10001 through 10015
BKDS-7022 (SY) : S/N 10001 through 10015

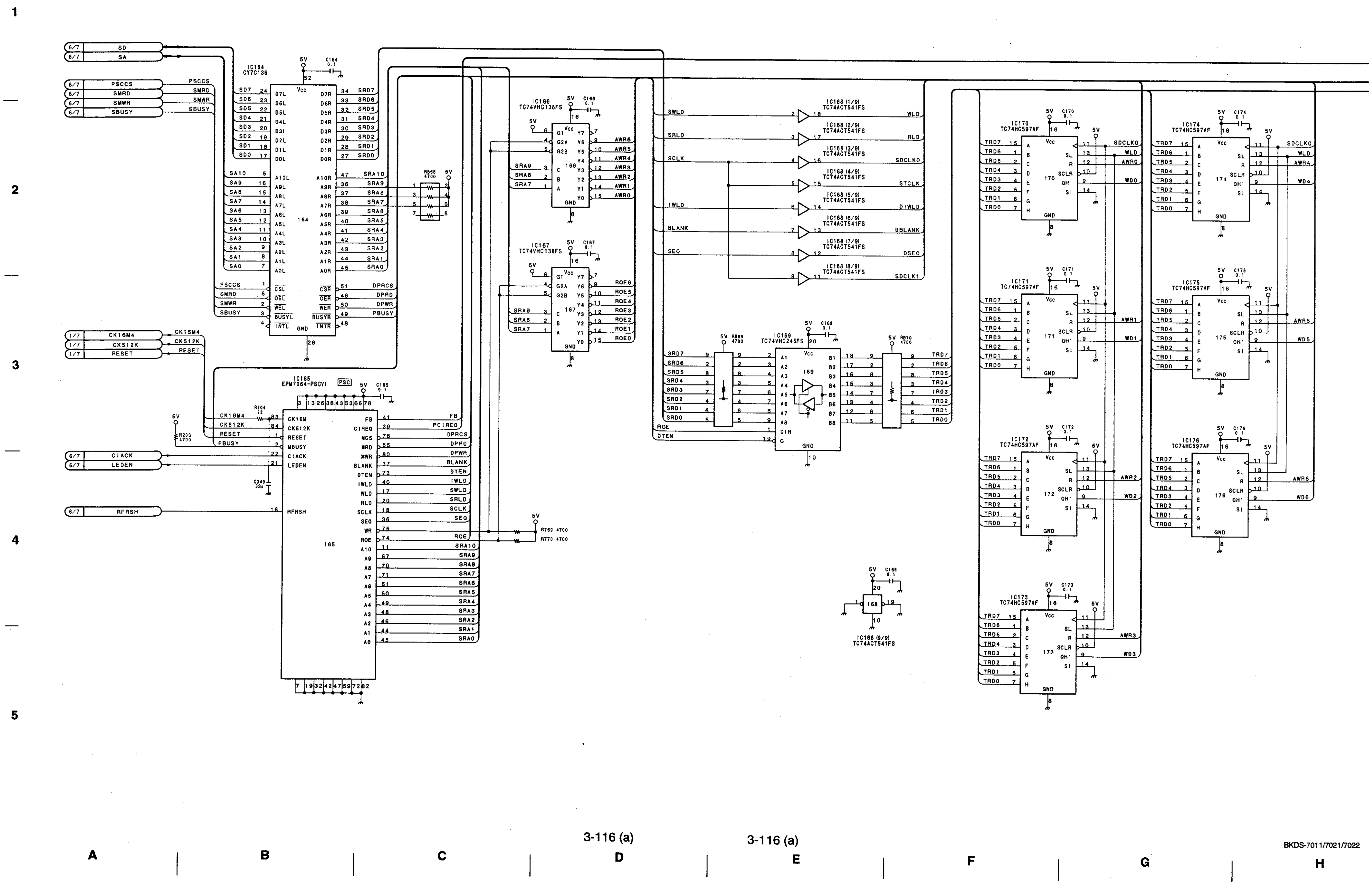

3-116 (a)

 CPU-191 (7/7) System Control Board

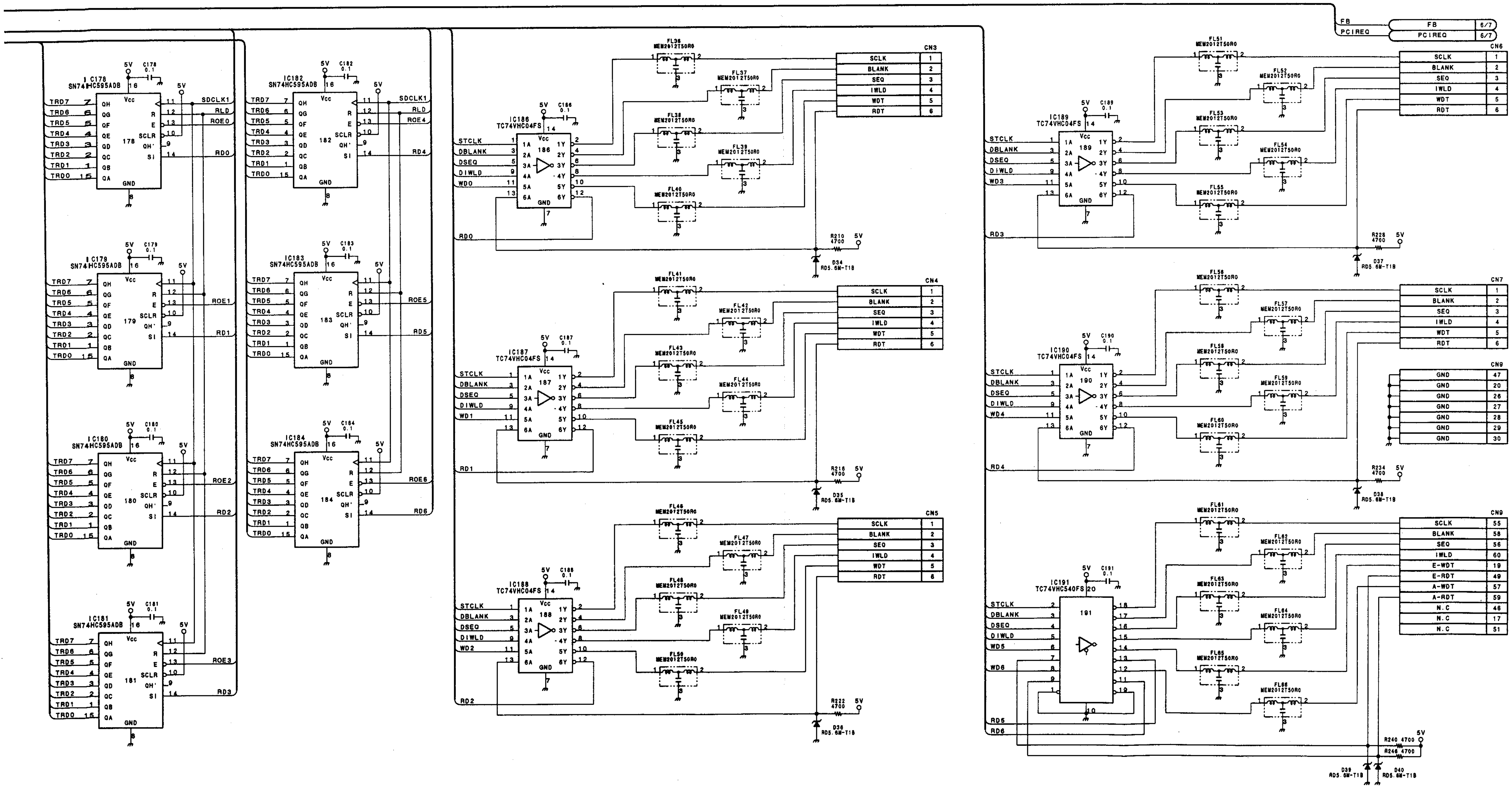

1
2
3
4
5

System Control Board
CPU-191 (7/7)
BKDS-7011/7021/7022
BOARD NO. 1-658-271-11
BKDS-7011 : LOT NO. 505-508
BKDS-7021 : LOT NO. 505-508
BKDS-7022 : LOT NO. 505-508
B-¥SJXA076-CPU191-11

I | J | K | L | M | N | O | P

DVS-7000 (SY) : S/N 10001 and Higher
DMK-7000 (SY) : S/N 10001 and Higher

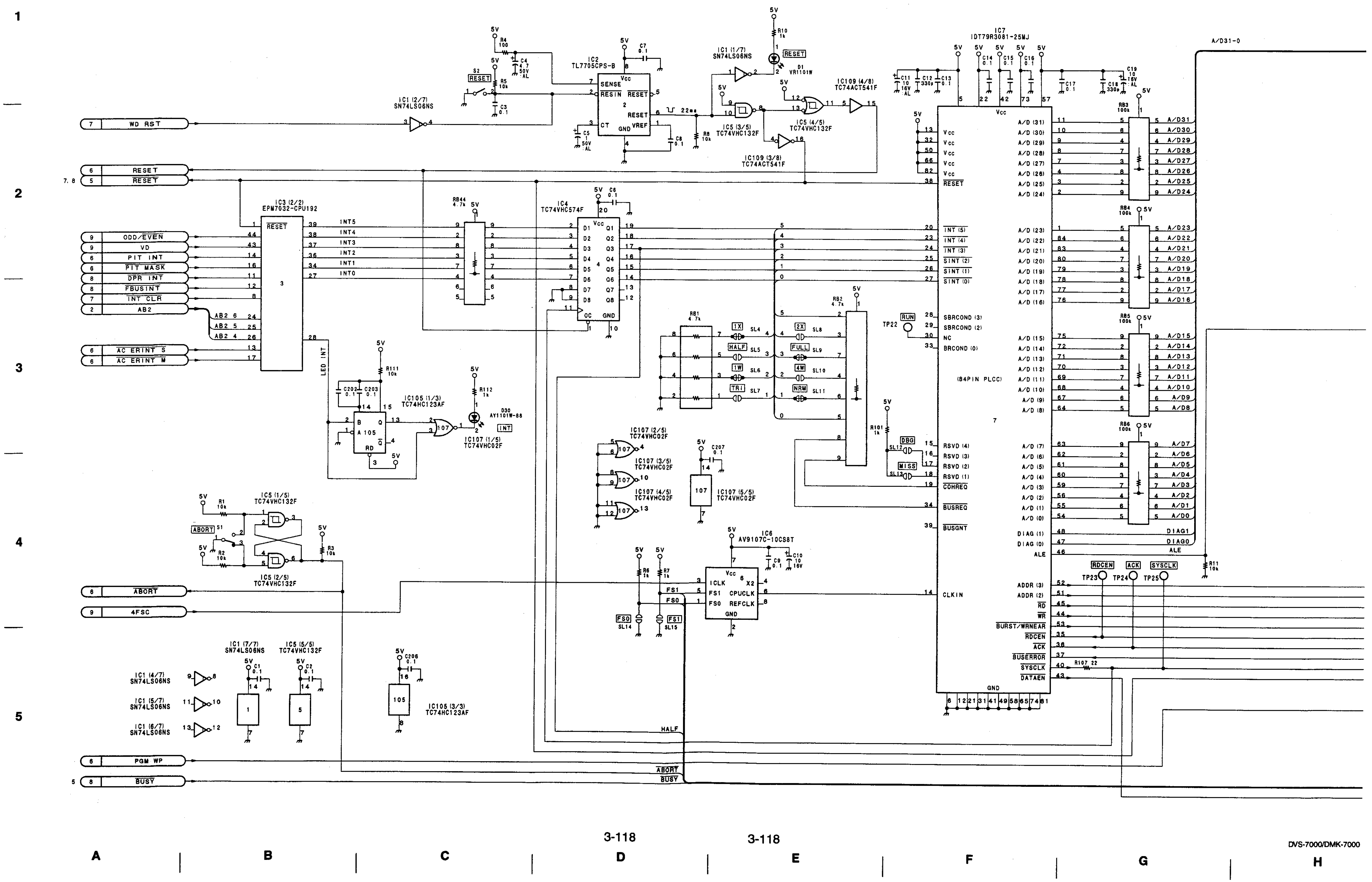

CPU-192 (1/10) System Control Board

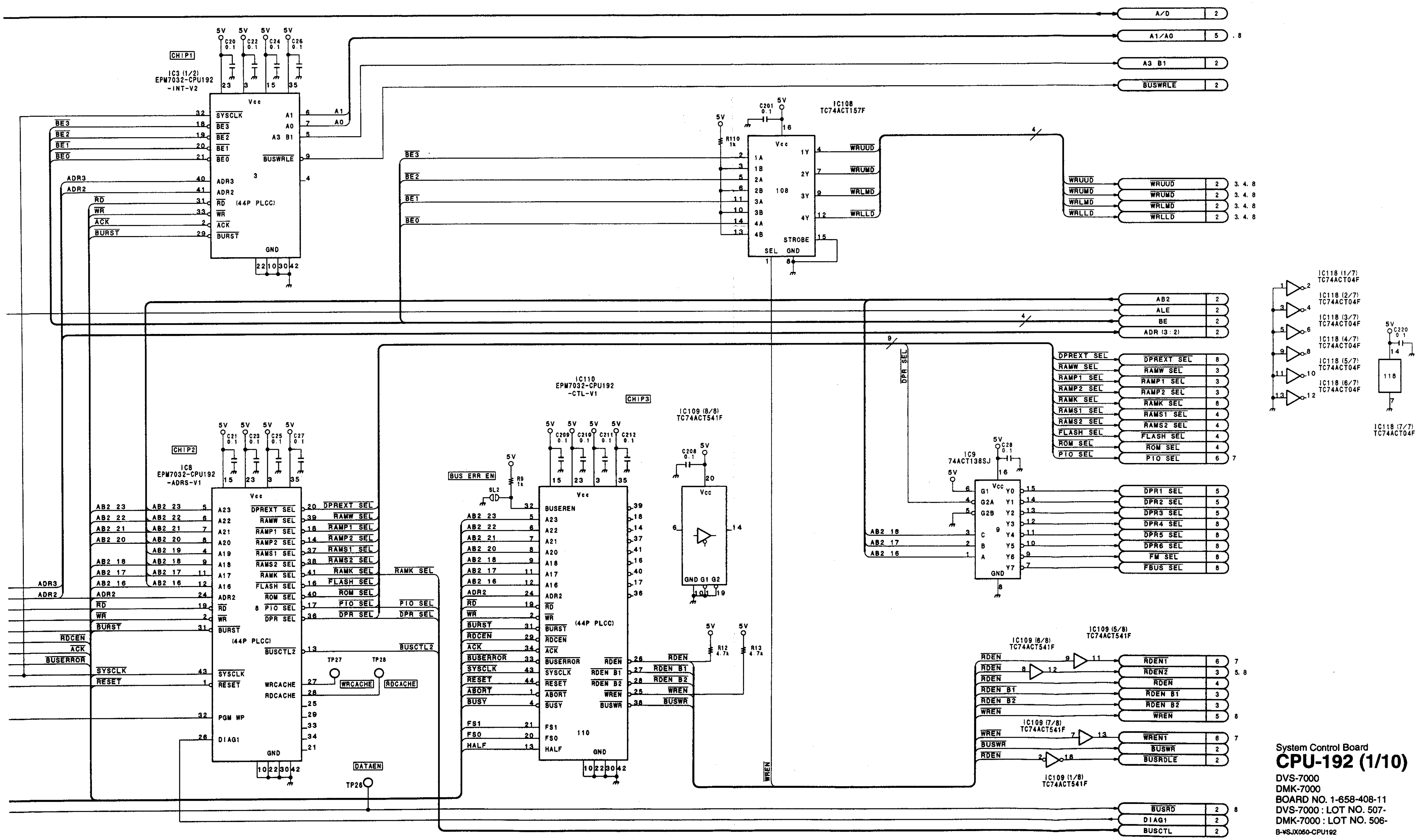

1
2
3
4
5

System Control Board
CPU-192 (1/10)
DVS-7000
DMK-7000
BOARD NO. 1-658-408-11
DVS-7000 : LOT NO. 507-
DMK-7000 : LOT NO. 506-
B-¥SJX050-CPU192

I J K L M N O P

DVS-7000 (SY) : S/N 10001 and Higher
DMK-7000 (SY) : S/N 10001 and Higher

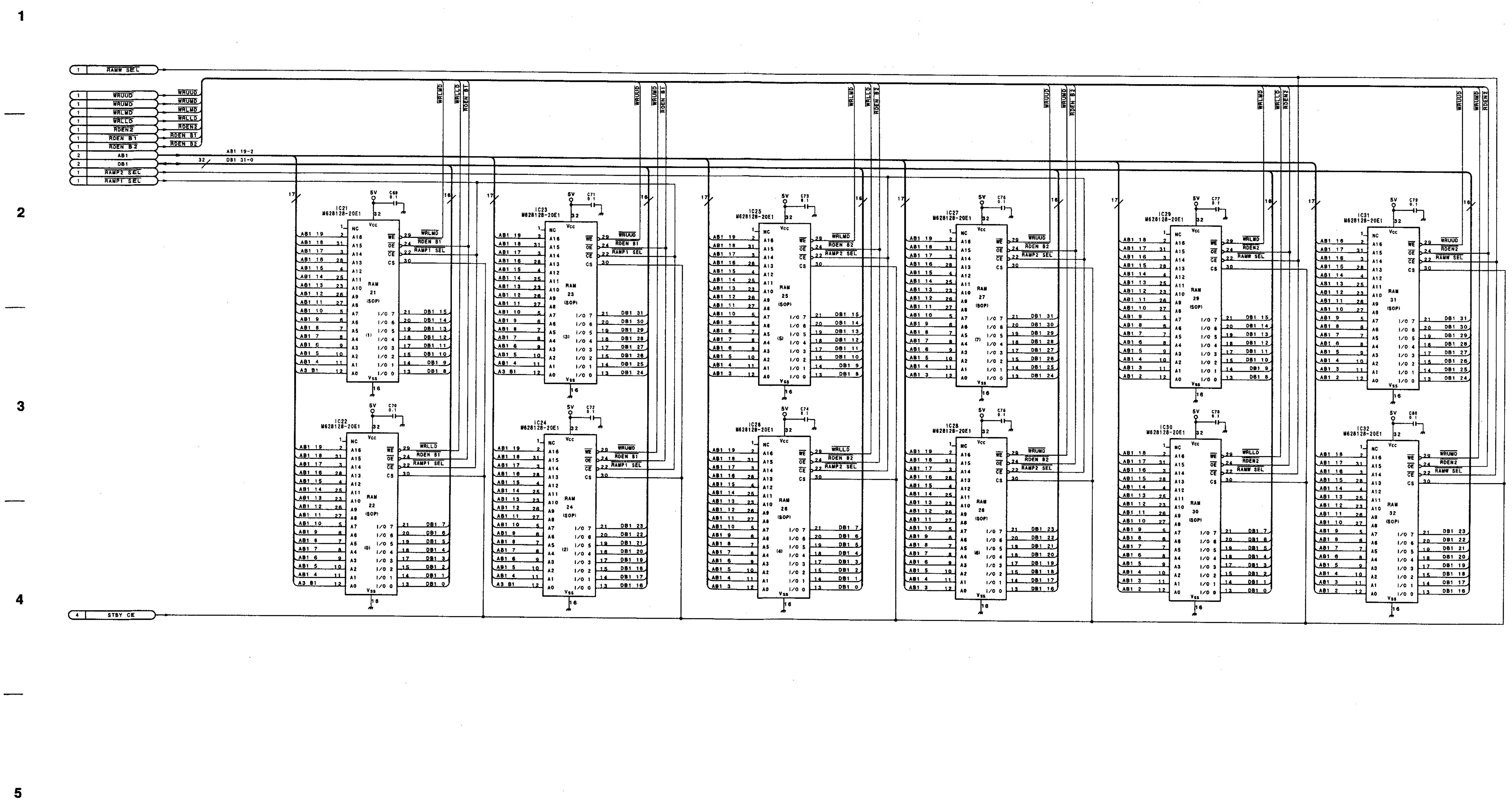

System Control Board
CPU-192 (3/10)
DVS-7000
DMK-7000
BOARD NO. 1-658-408-11
DVS-7000 : LOT NO. 507-
DMK-7000 : LOT NO. 506-
B-¥SJX050-CPU192

DVS-7000 (SY) : S/N 10001 and Higher
DMK-7000 (SY) : S/N 10001 and Higher

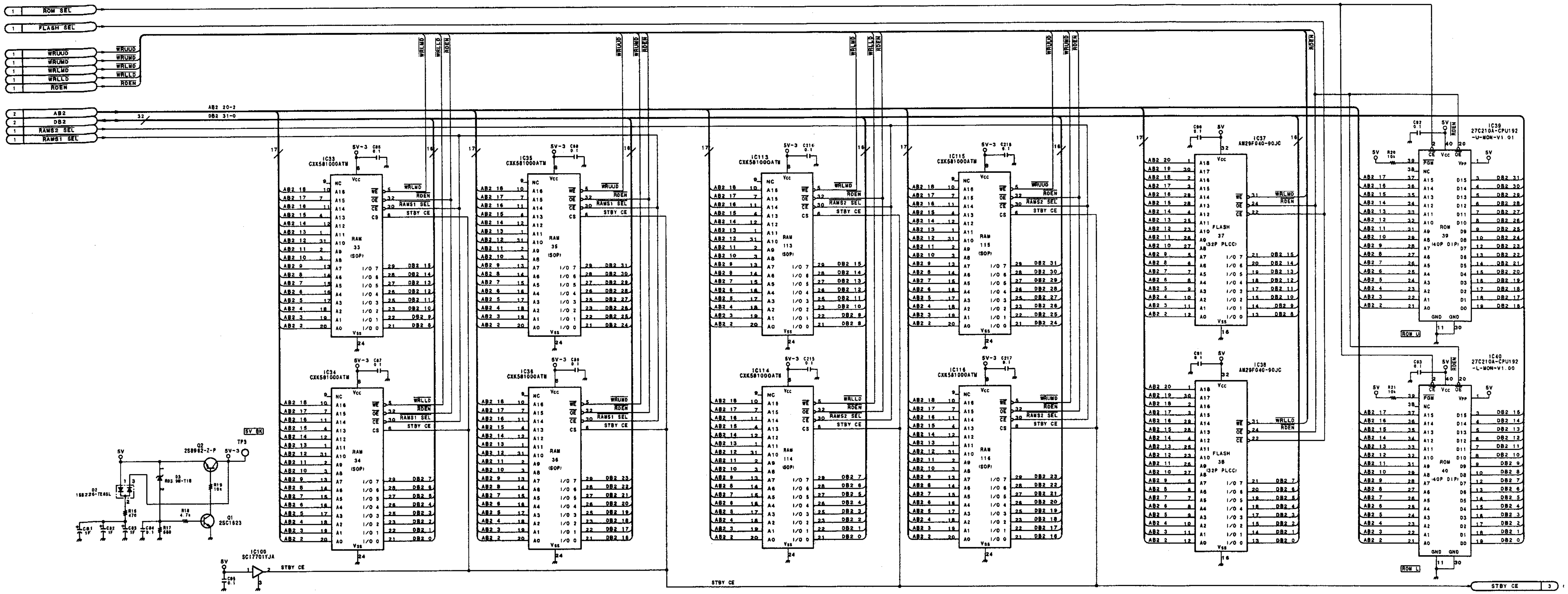

System Control Board
CPU-192 (4/10)
DVS-7000
DMK-7000
BOARD NO. 1-658-408-11
DVS-7000 : LOT NO. 507-
DMK-7000 : LOT NO. 506-
B-VSJX050-CPU192

DVS-7000 (SY) : S/N 10001 and Higher
DMK-7000 (SY) : S/N 10001 and Higher

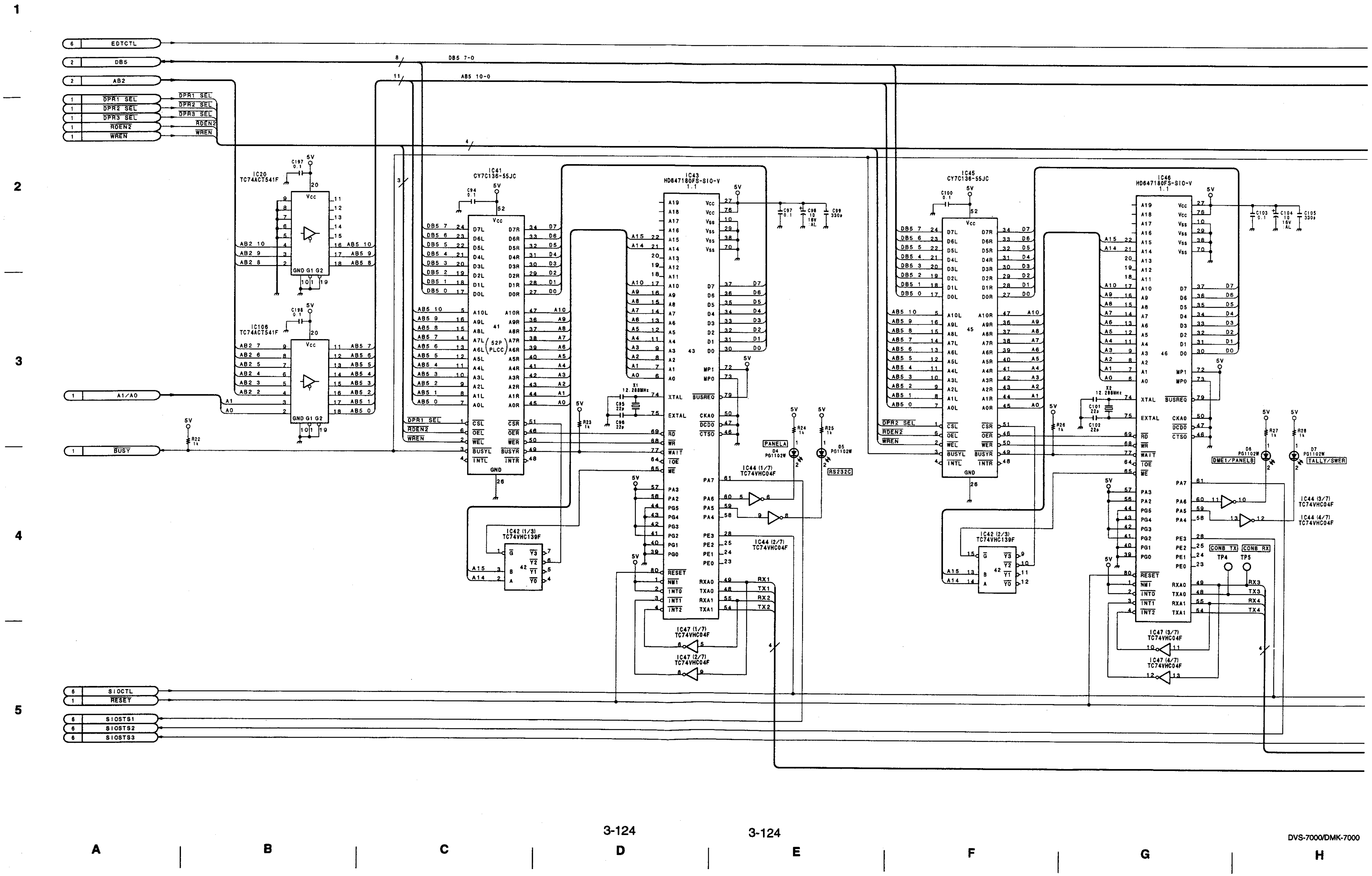

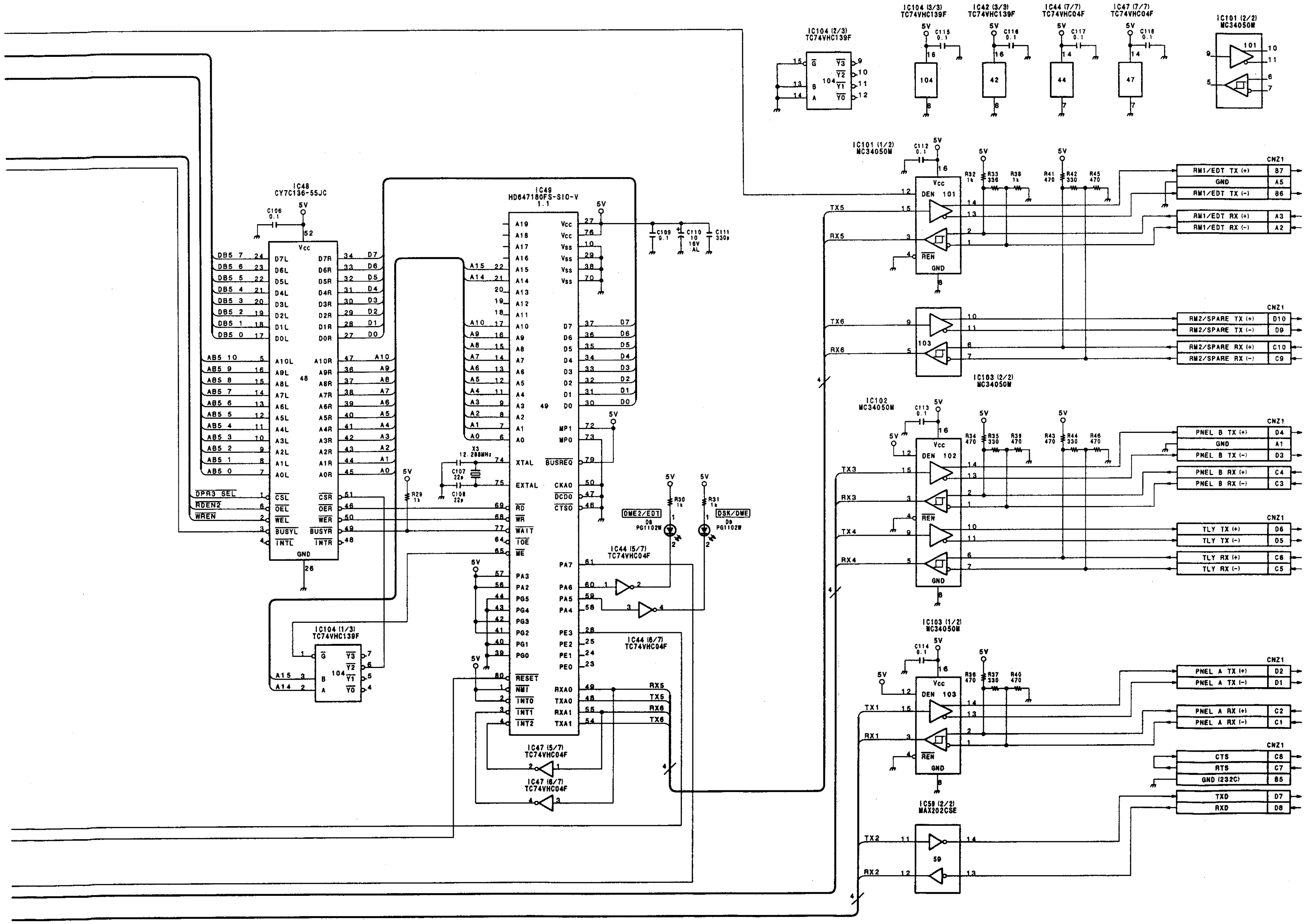

System Control Board
CPU-192 (5/10)
DVS-7000
DMK-7000
BOARD NO. 1-658-408-11
DVS-7000 : LOT NO. 507-
DMK-7000 : LOT NO. 506-
B-¥SJX050-CPU192

DVS-7000 (SY) : S/N 10001 and Higher
DMK-7000 (SY) : S/N 10001 and Higher

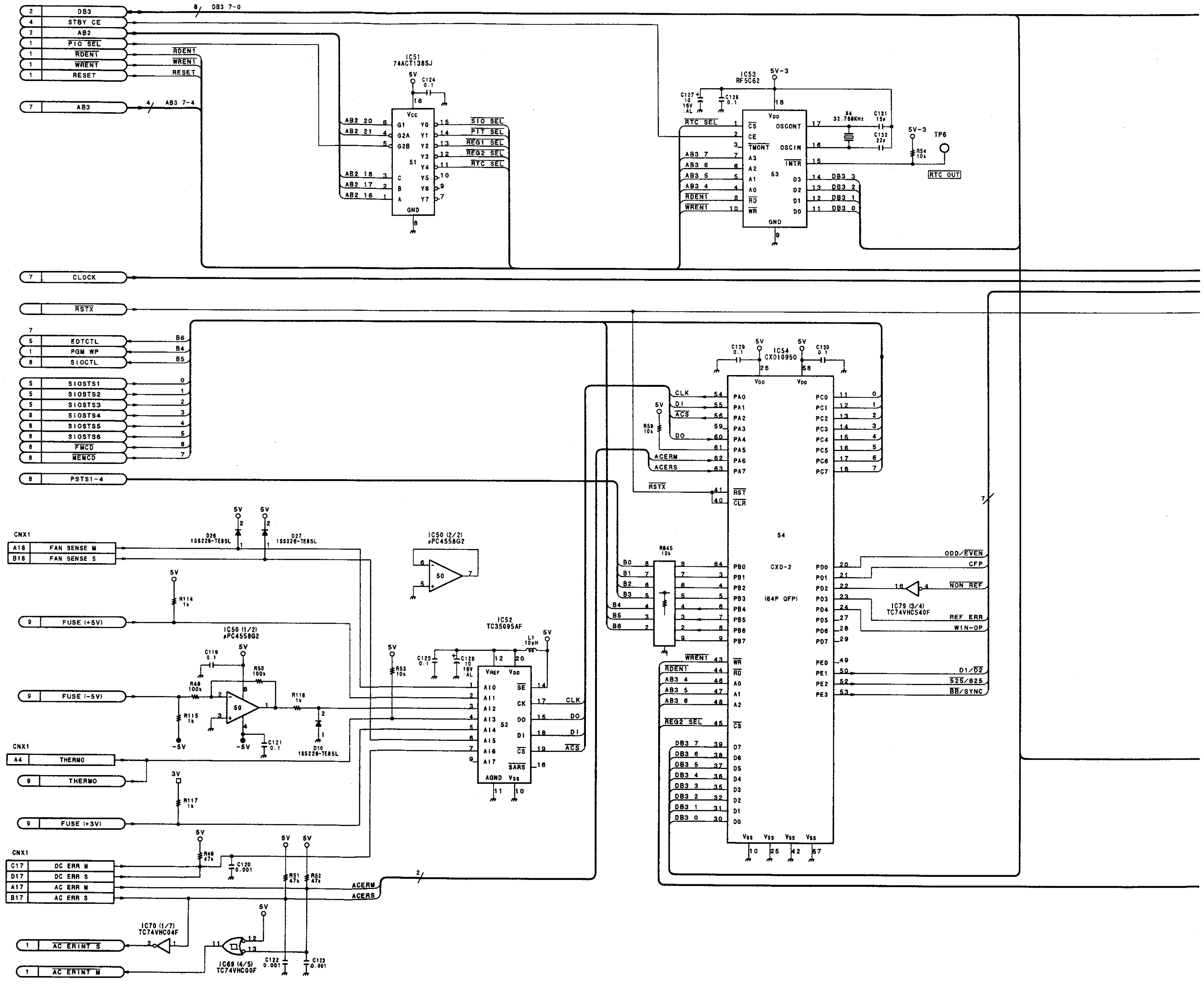

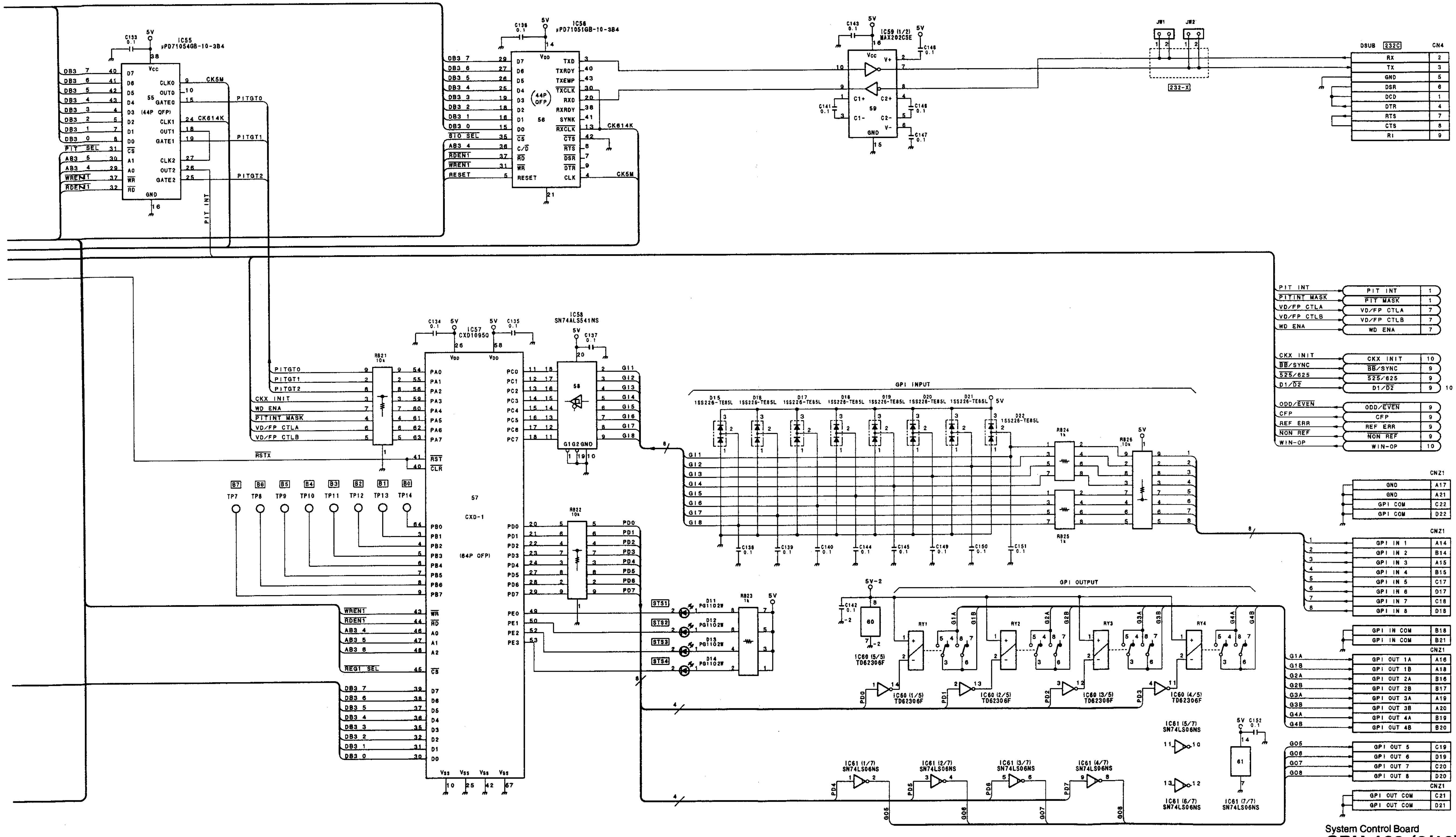

1
2
3
4
5

System Control Board

CPU-192 (6/10)

DVS-7000
DMK-7000
BOARD NO. 1-658-408-11
DVS-7000 : LOT NO. 507-
DMK-7000 : LOT NO. 506-
B-¥SJX050-CPU192

DVS-7000 (SY) : S/N 10001 and Higher
DMK-7000 (SY) : S/N 10001 and Higher

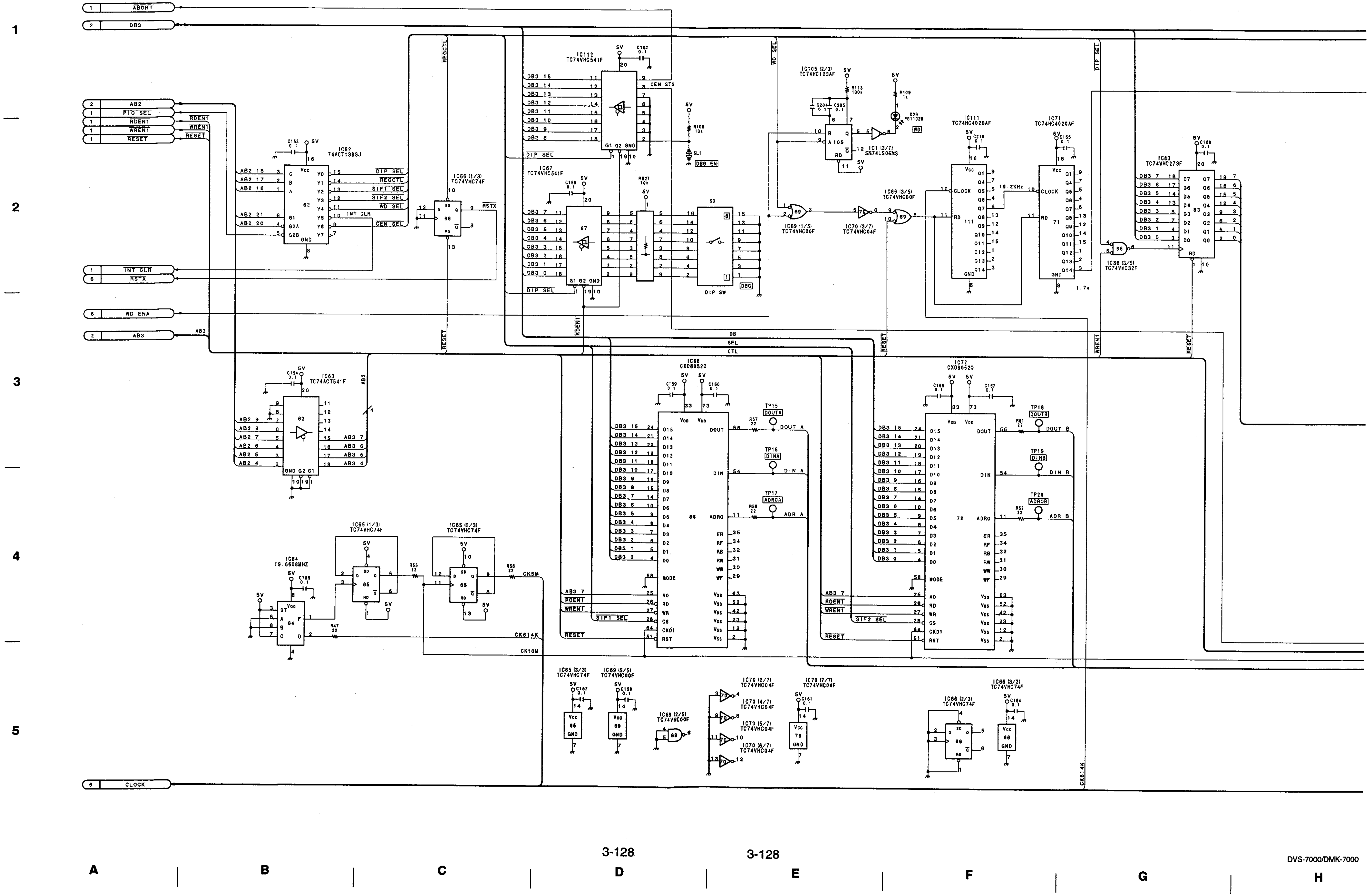

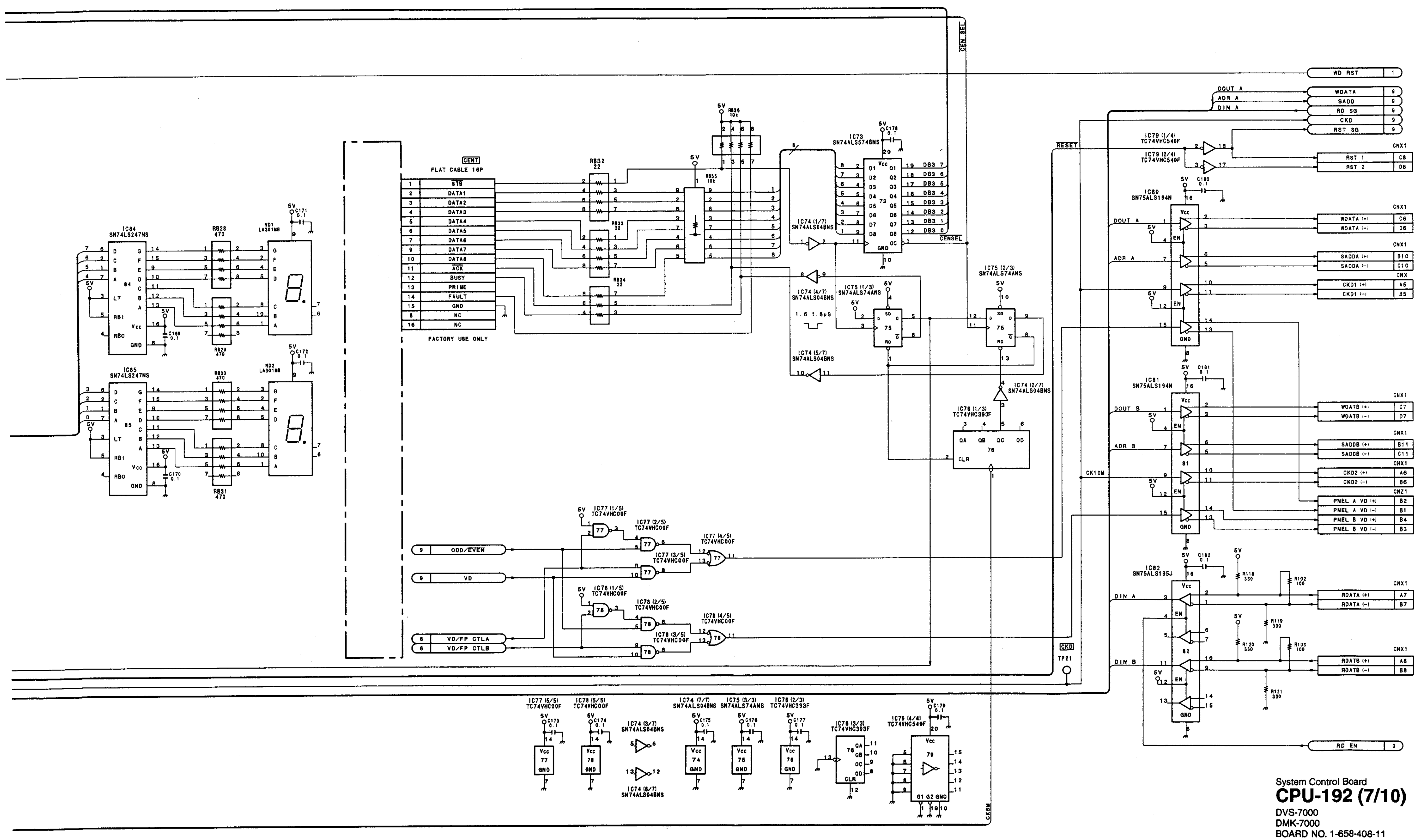

System Control Board
CPU-192 (7/10)
DVS-7000
DMK-7000
BOARD NO. 1-658-408-11
DVS-7000 : LOT NO. 507-
DMK-7000 : LOT NO. 506-
B-¥SJX050-CPU192

DVS-7000 (SY) : S/N 10001 and Higher
DMK-7000 (SY) : S/N 10001 and Higher

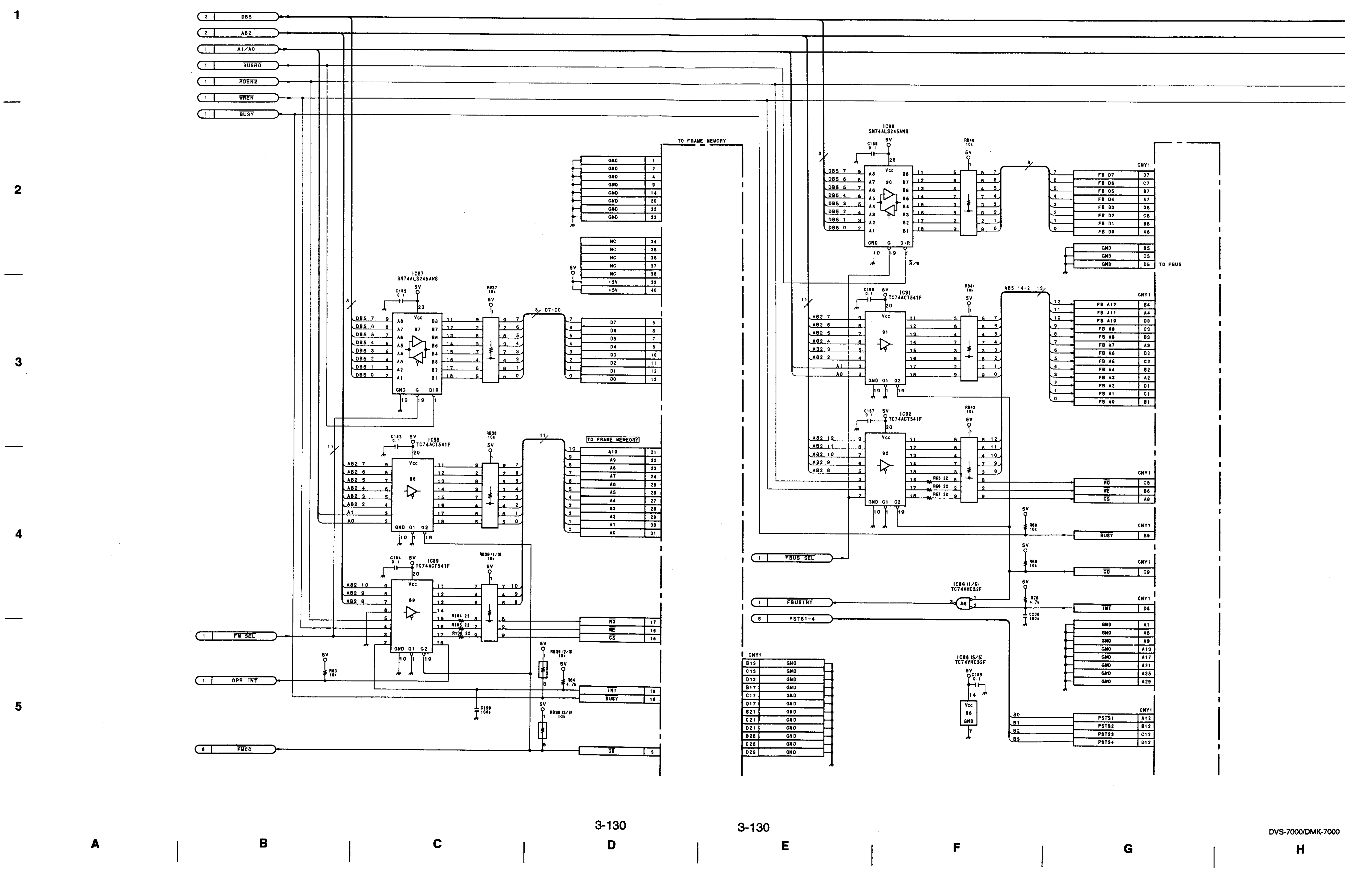

1

2

3

4

5

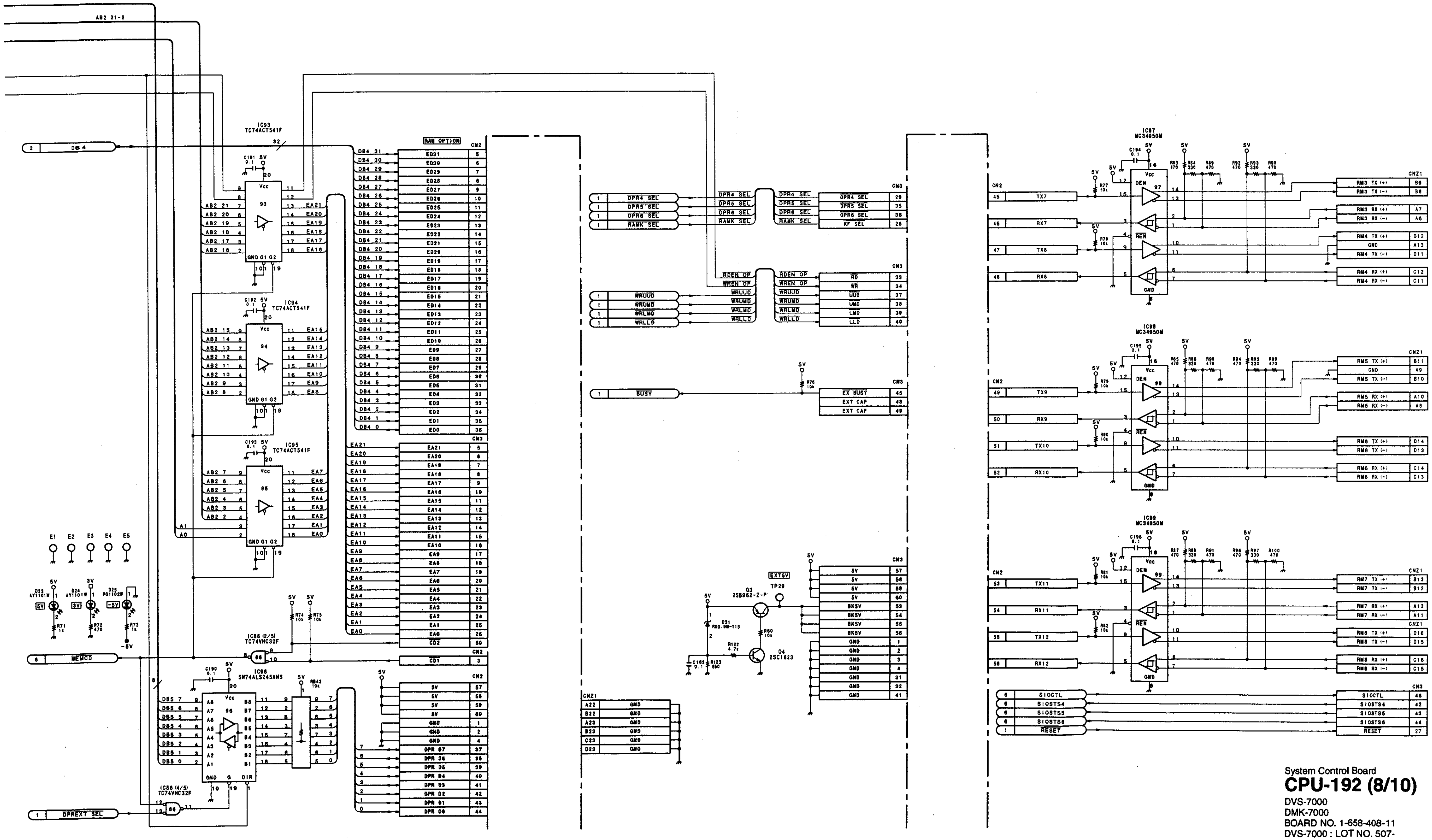

System Control Board
CPU-192 (8/10)
DVS-7000
DMK-7000
BOARD NO. 1-658-408-11
DVS-7000 : LOT NO. 507-
DMK-7000 : LOT NO. 506-
B-¥SJX050-CPU192

I J K L M N O P

DVS-7000 (SY) : S/N 10001 and Higher
DMK-7000 (SY) : S/N 10001 and Higher

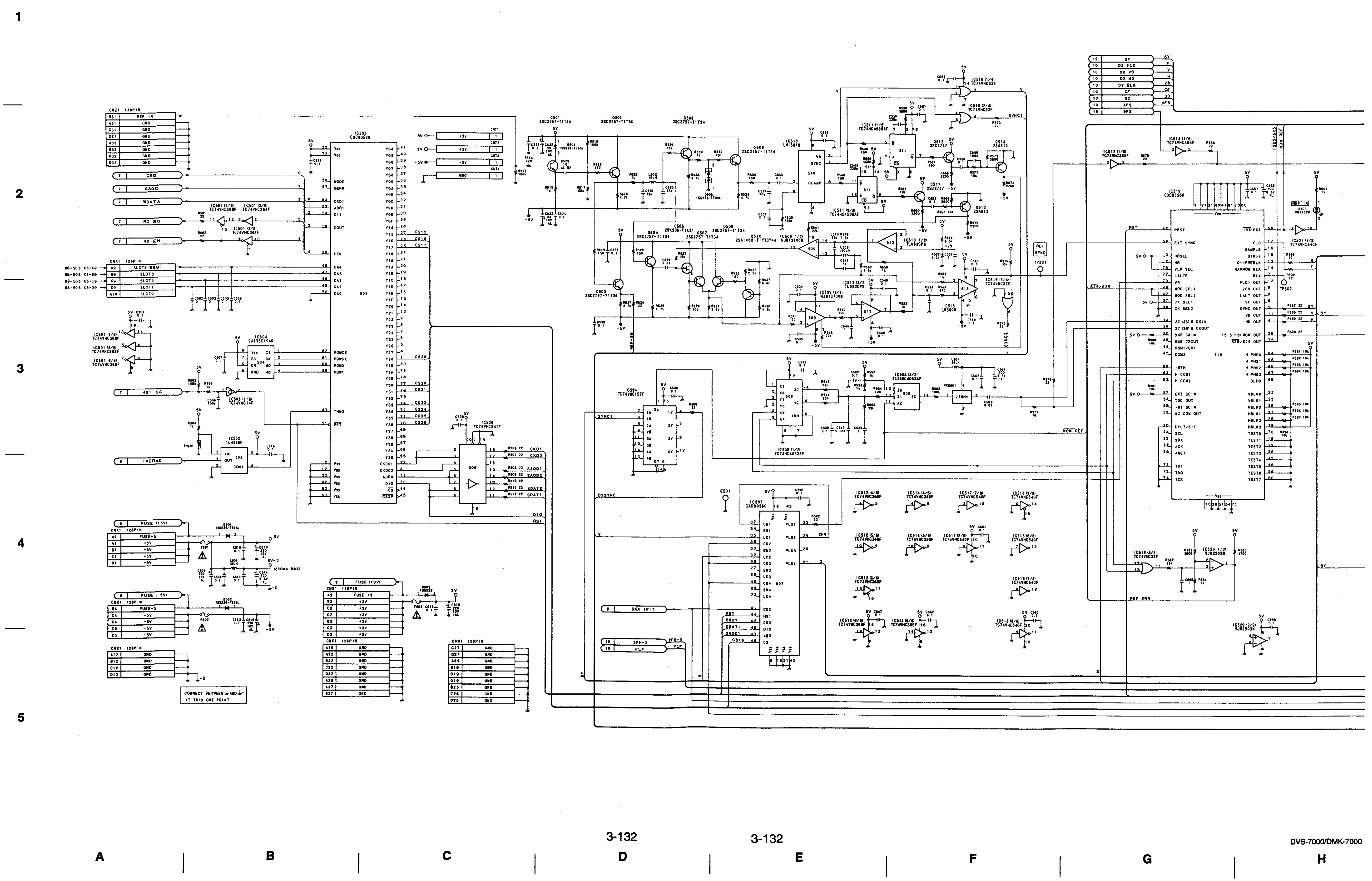

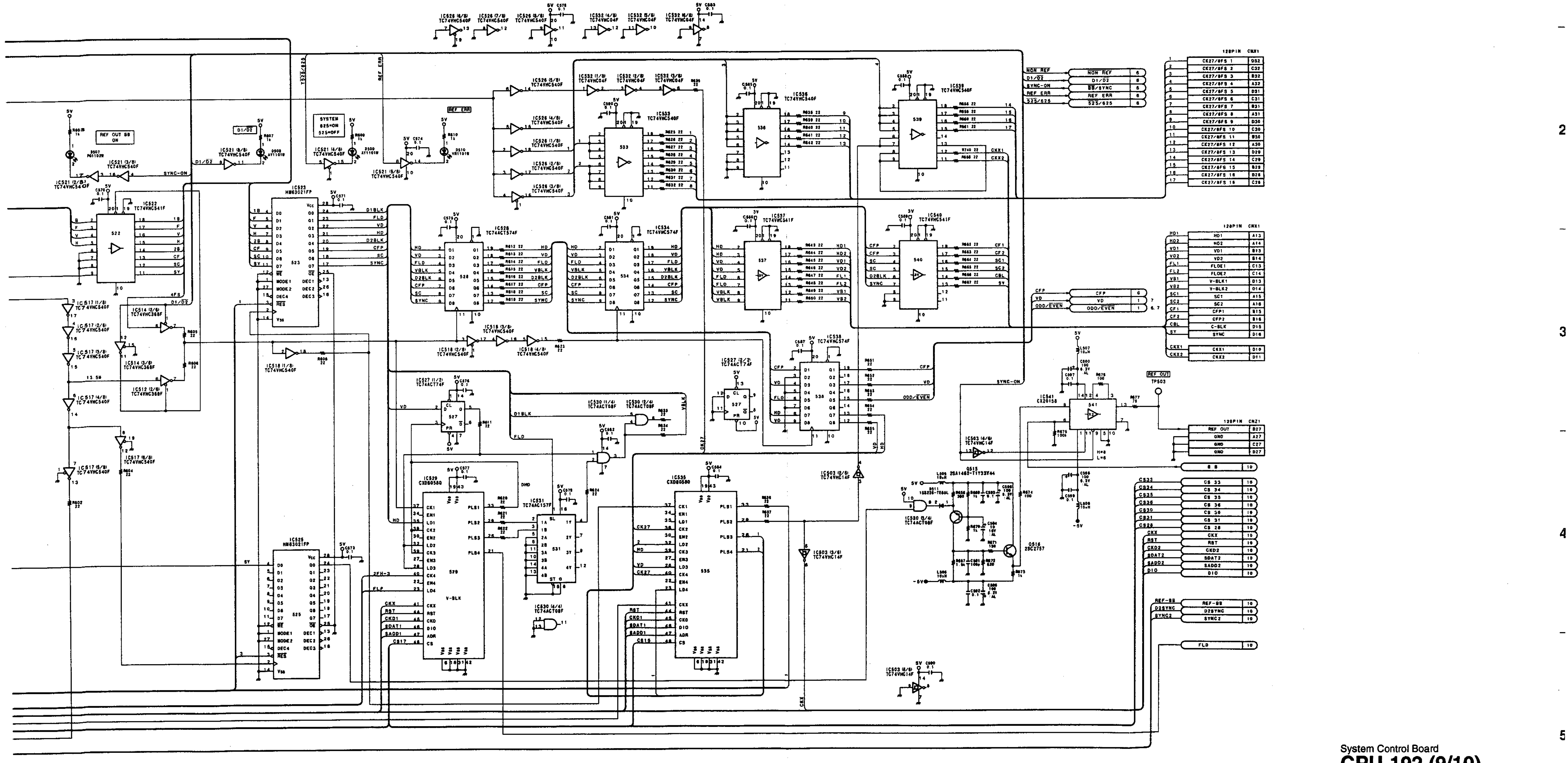

System Control Board
CPU-192 (9/10)
DVS-7000
DMK-7000
BOARD NO. 1-658-408-11
DVS-7000 : LOT NO. 507-
DMK-7000 : LOT NO. 506-
B-¥SJX050-CPU192

DVS-7000 (SY) : S/N 10001 and Higher
DMK-7000 (SY) : S/N 10001 and Higher

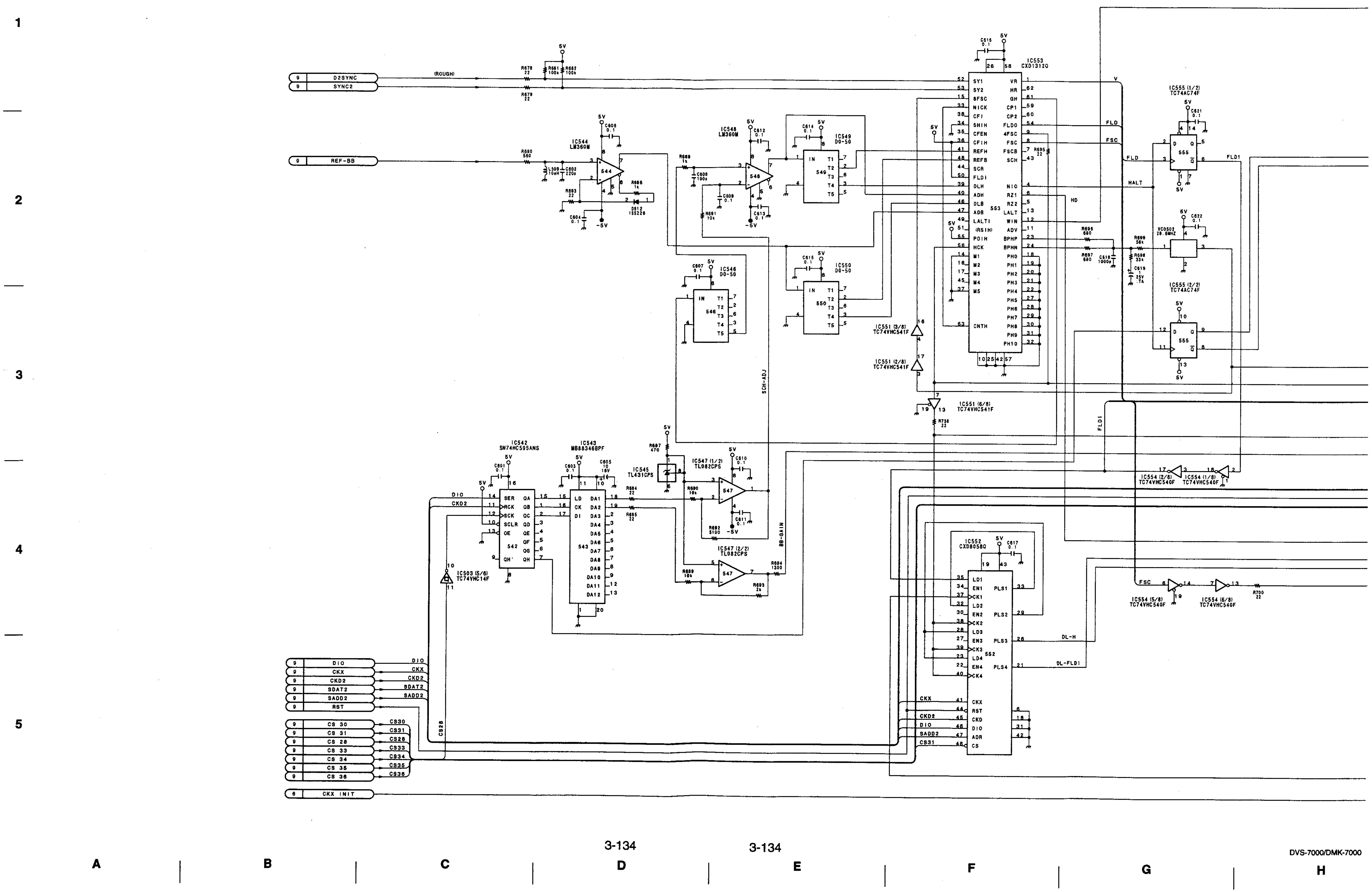

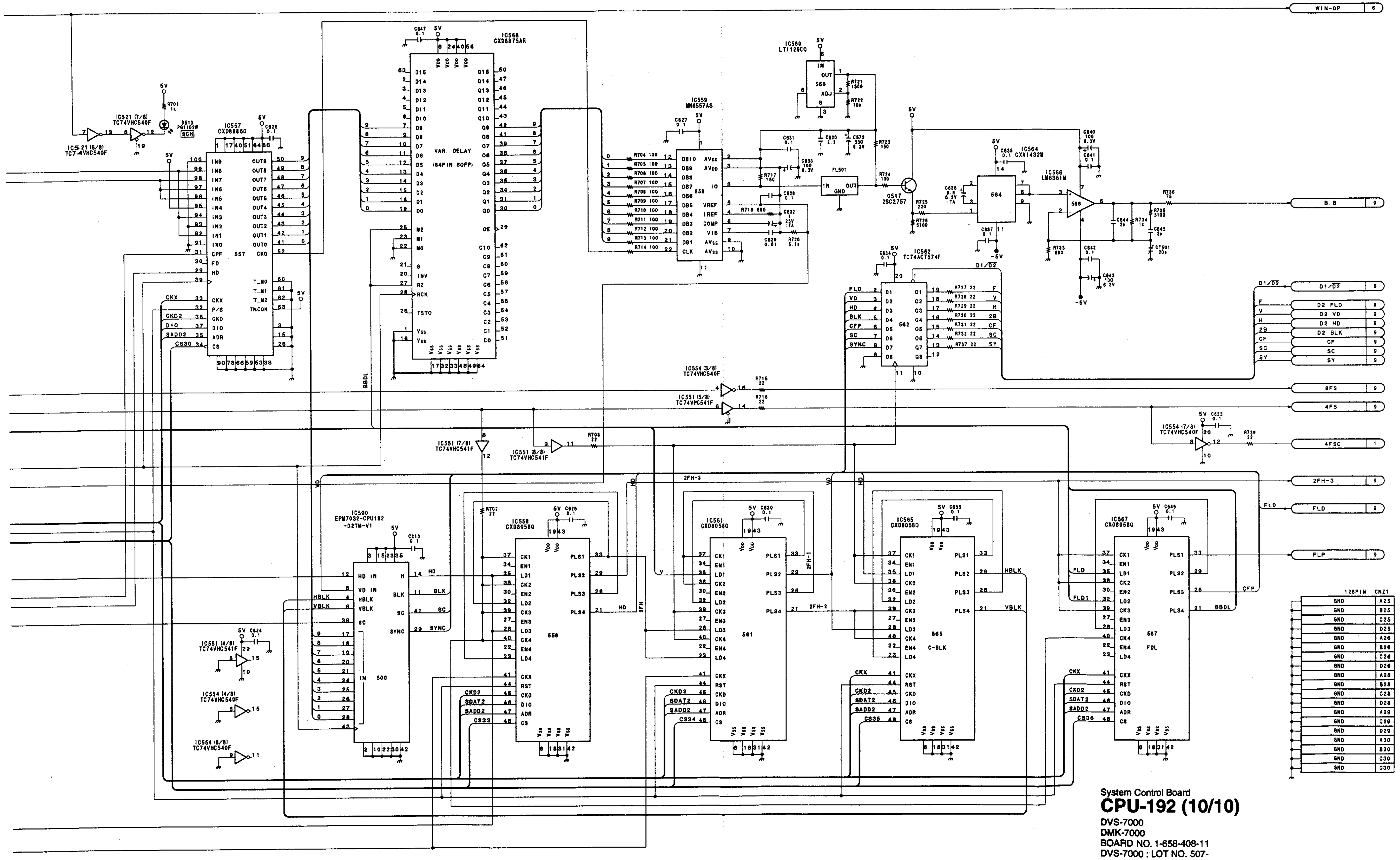

System Control Board
CPU-192 (10/10)
DVS-7000
DMK-7000
BOARD NO. 1-658-408-11
DVS-7000 : LOT NO. 507-
DMK-7000 : LOT NO. 506-
B-VSJX050-CPU192

BKDS-7060 (SY) : S/N 10001 and Higher

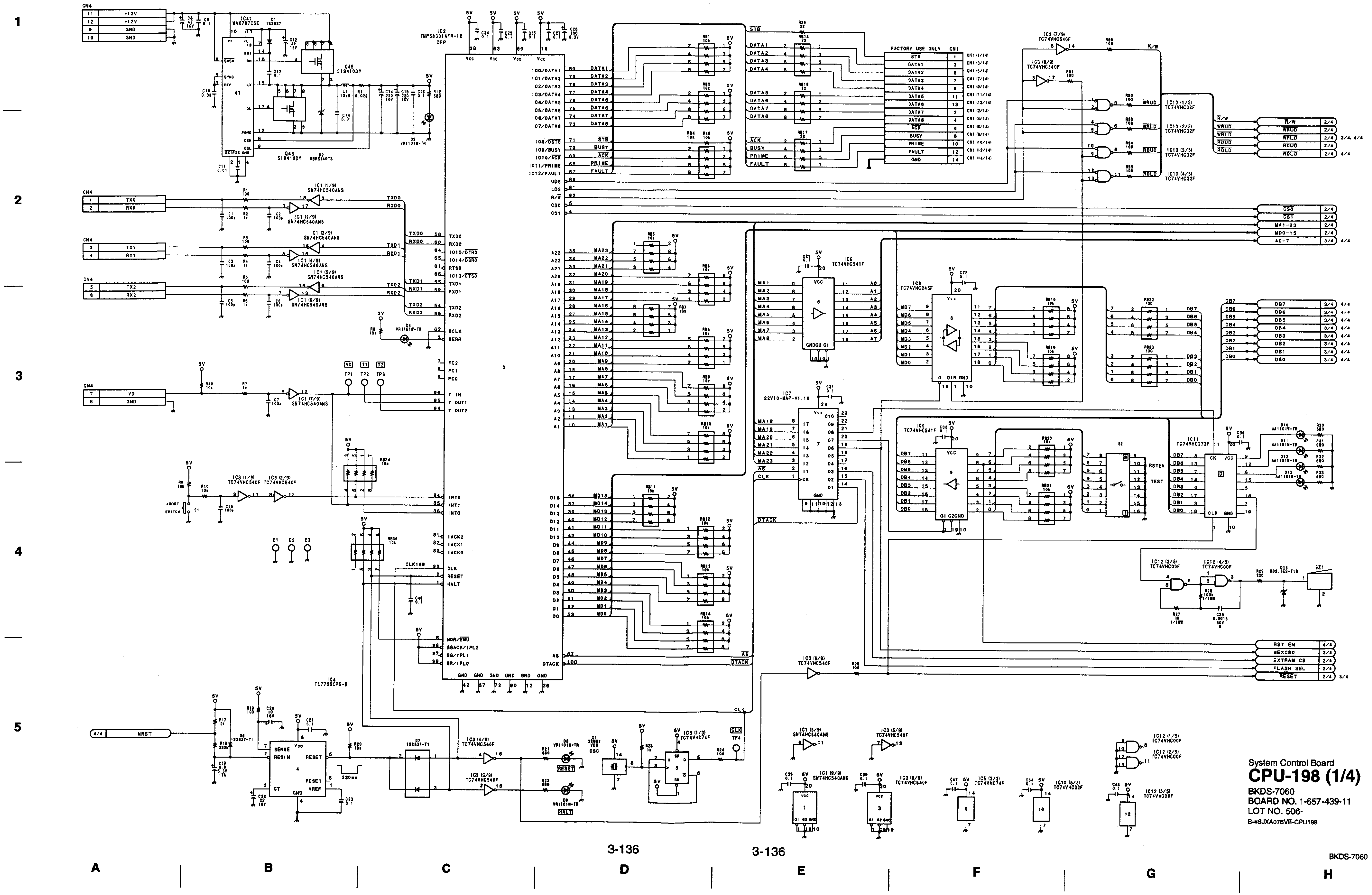

System Control Board
CPU-198 (1/4)
BKDS-7060
BOARD NO. 1-657-439-11
LOT NO. 506-
B-¥SJXA076VE-CPU198

BKDS-7060 (SY) : S/N 10001 and Higher

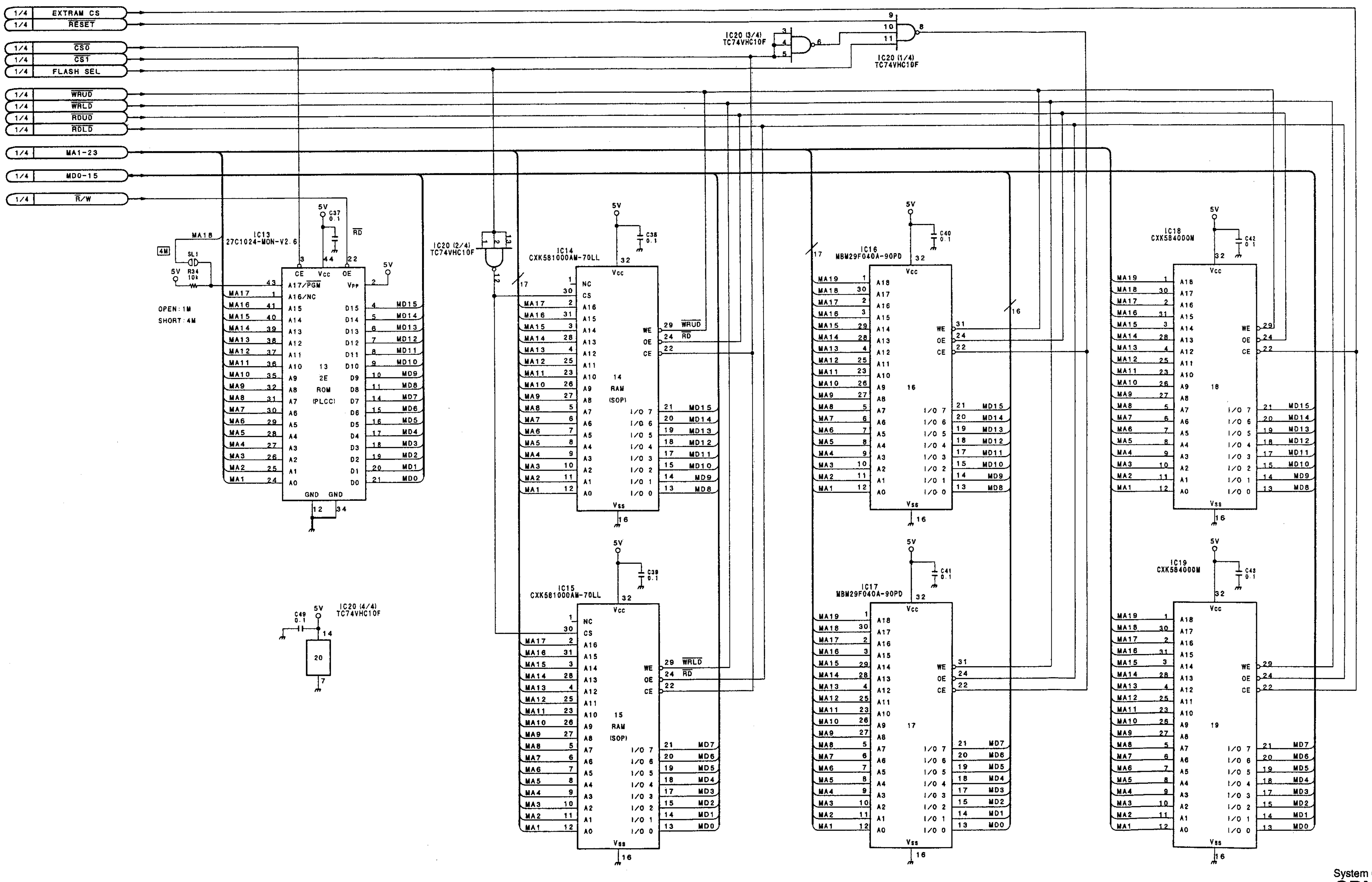

System Control Board
CPU-198 (2/4)
BKDS-7060
BOARD NO. 1-657-439-11
LOT NO. 506-
B-¥SJXA076VE-CPU198

BKDS-7060 (SY) : S/N 10001 and Higher

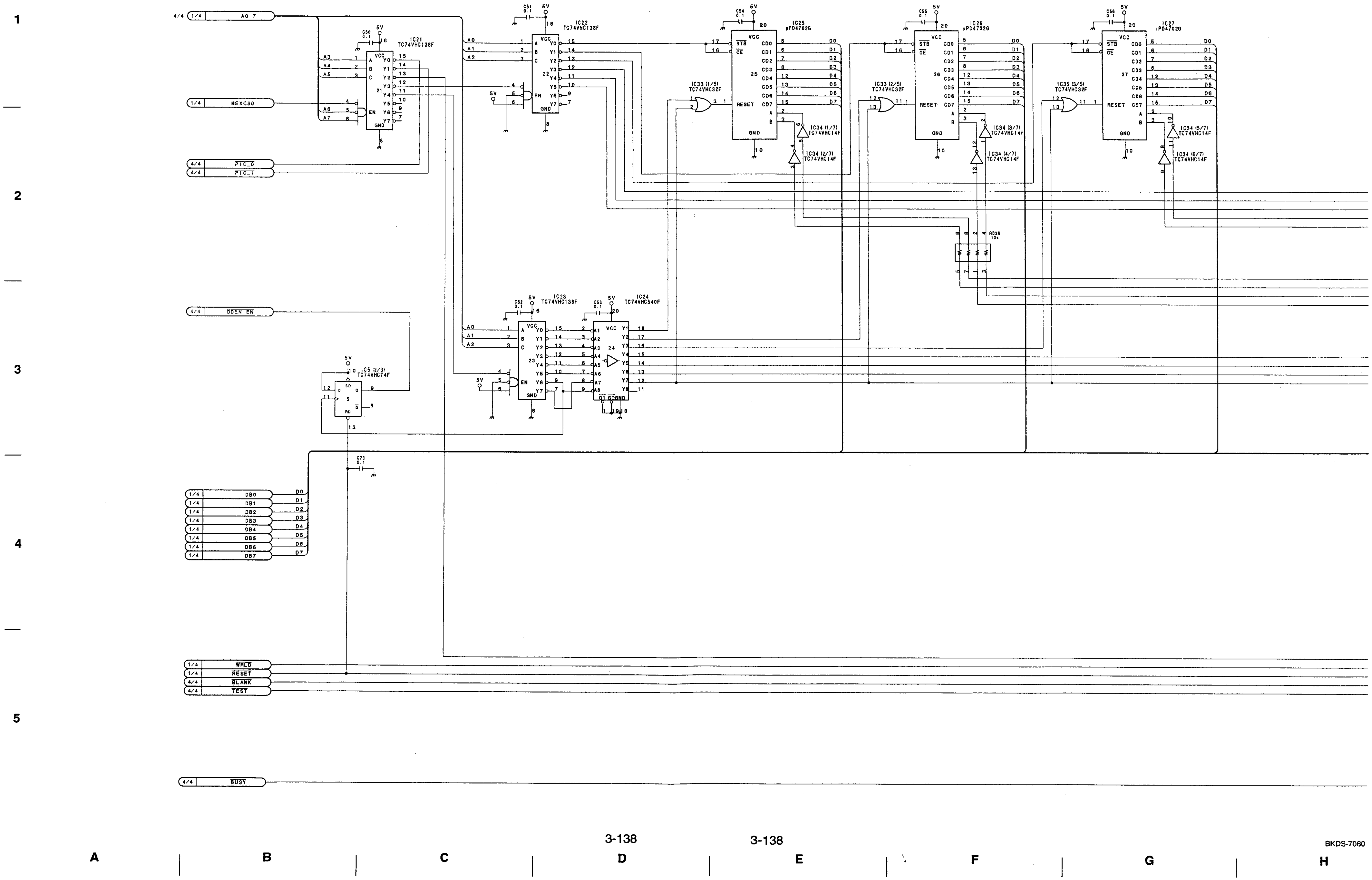

CPU-198 (3/4) System Control Board

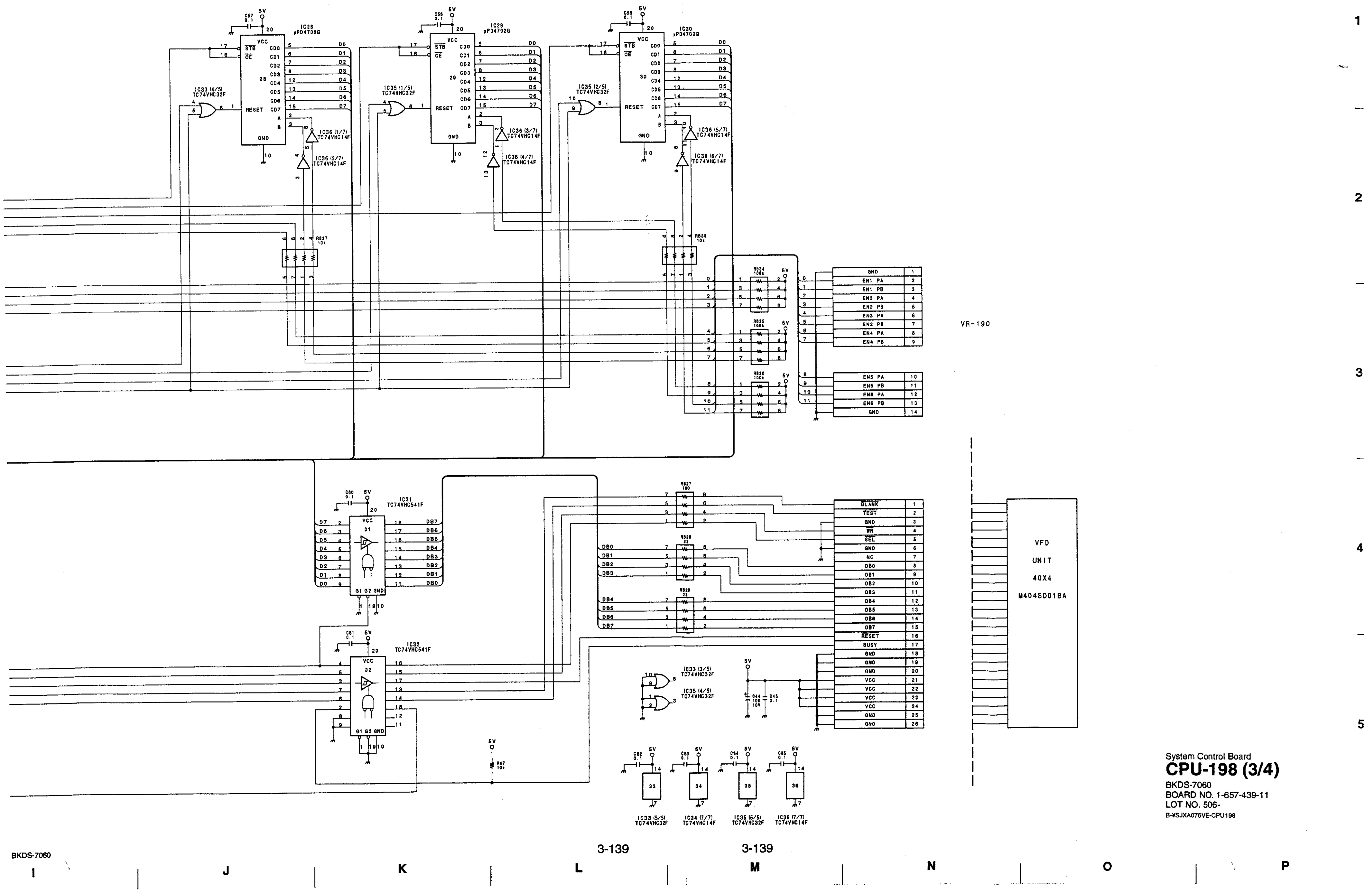

System Control Board
CPU-198 (3/4)
BKDS-7060
BOARD NO. 1-657-439-11
LOT NO. 506-
B-¥SJXA076VE-CPU198

BKDS-7060 (SY) : S/N 10001 and Higher

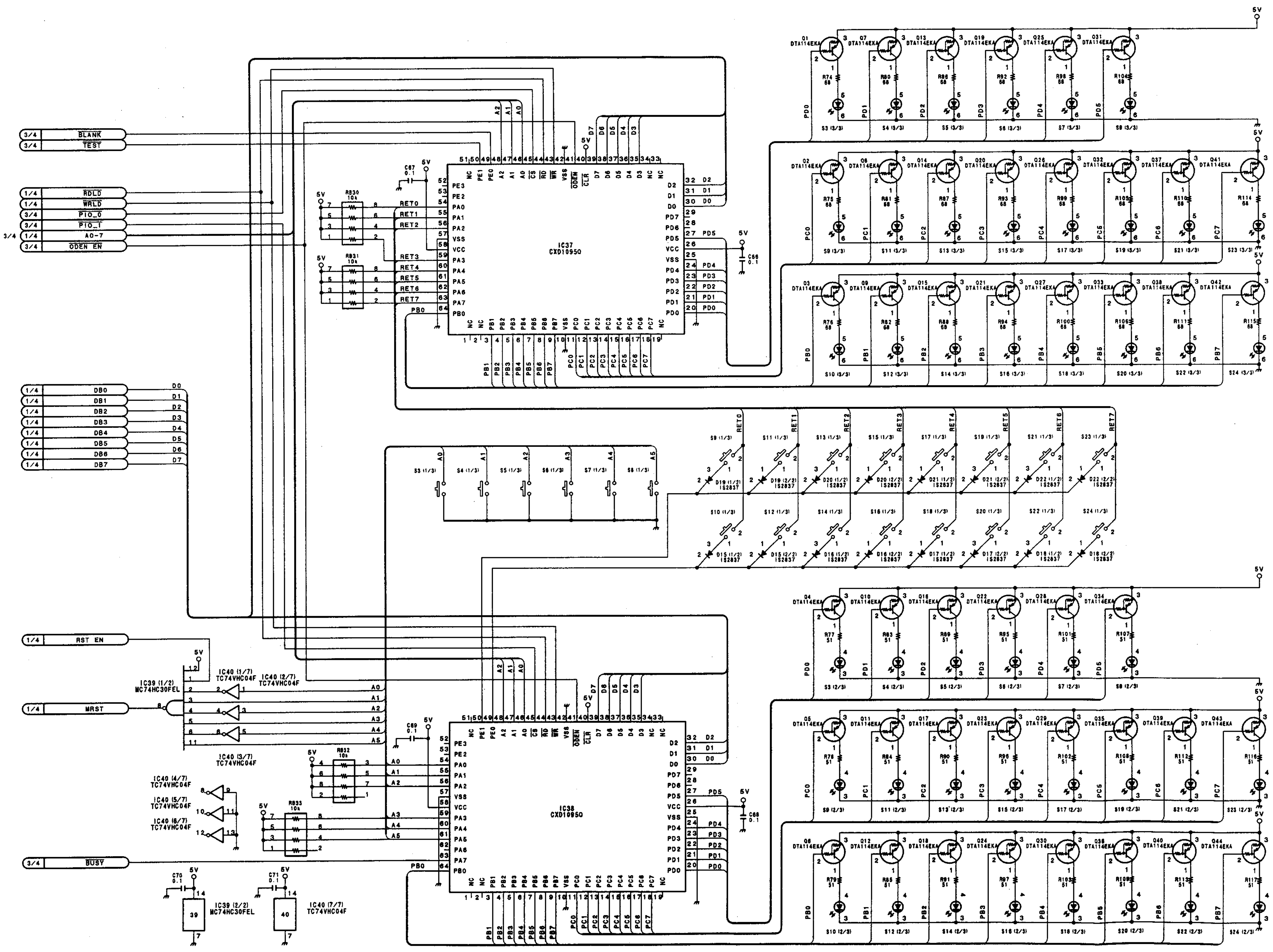

System Control Board
CPU-198 (4/4)
BKDS-7060
BOARD NO. 1-657-439-11
LOT NO. 506-
B-¥SJXA076VE-CPU198

1
2
3
4
5

A B C D E F G H

BKDS-M1010 (SY) : S/N 10001 and Higher

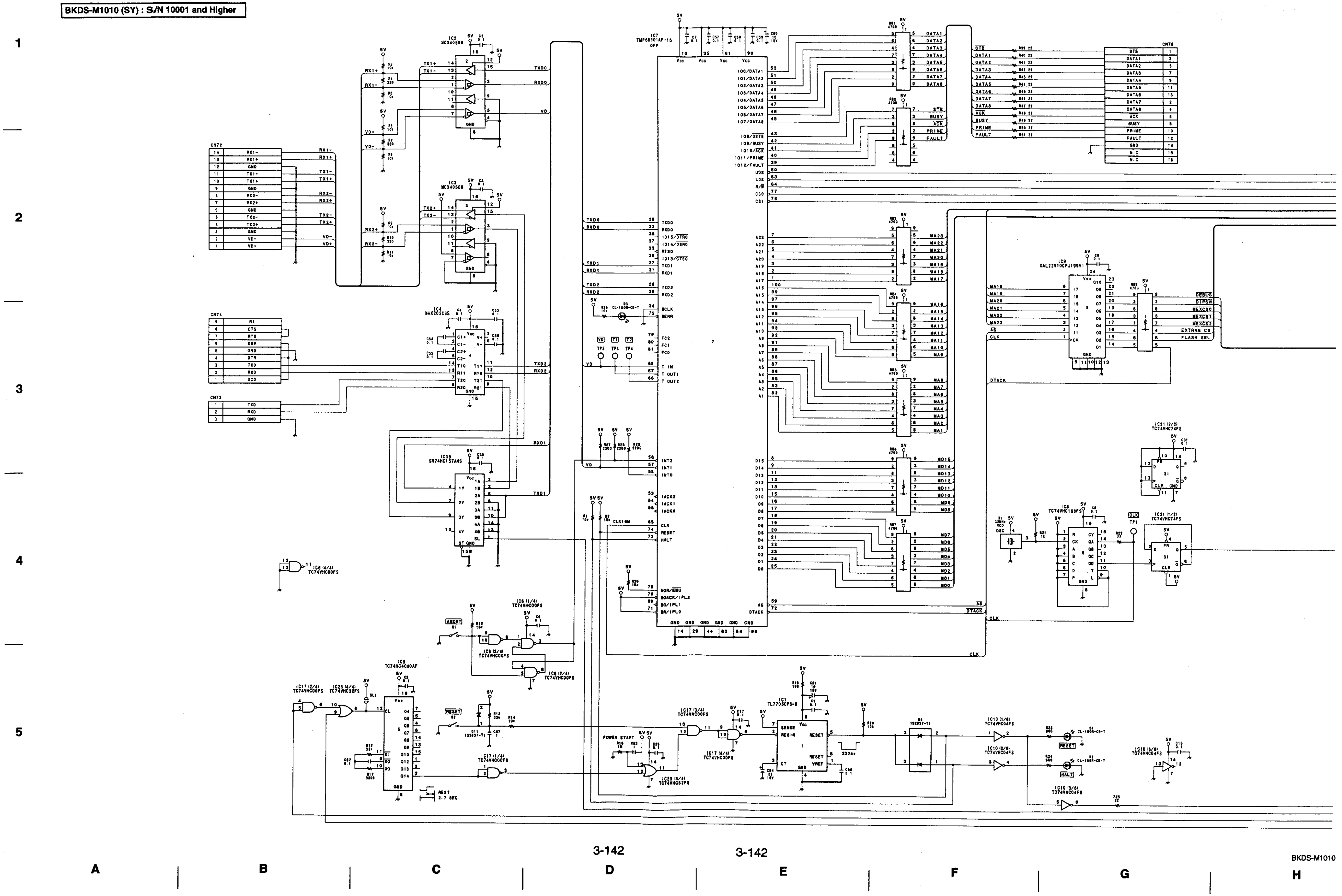

1

2

3

4

5

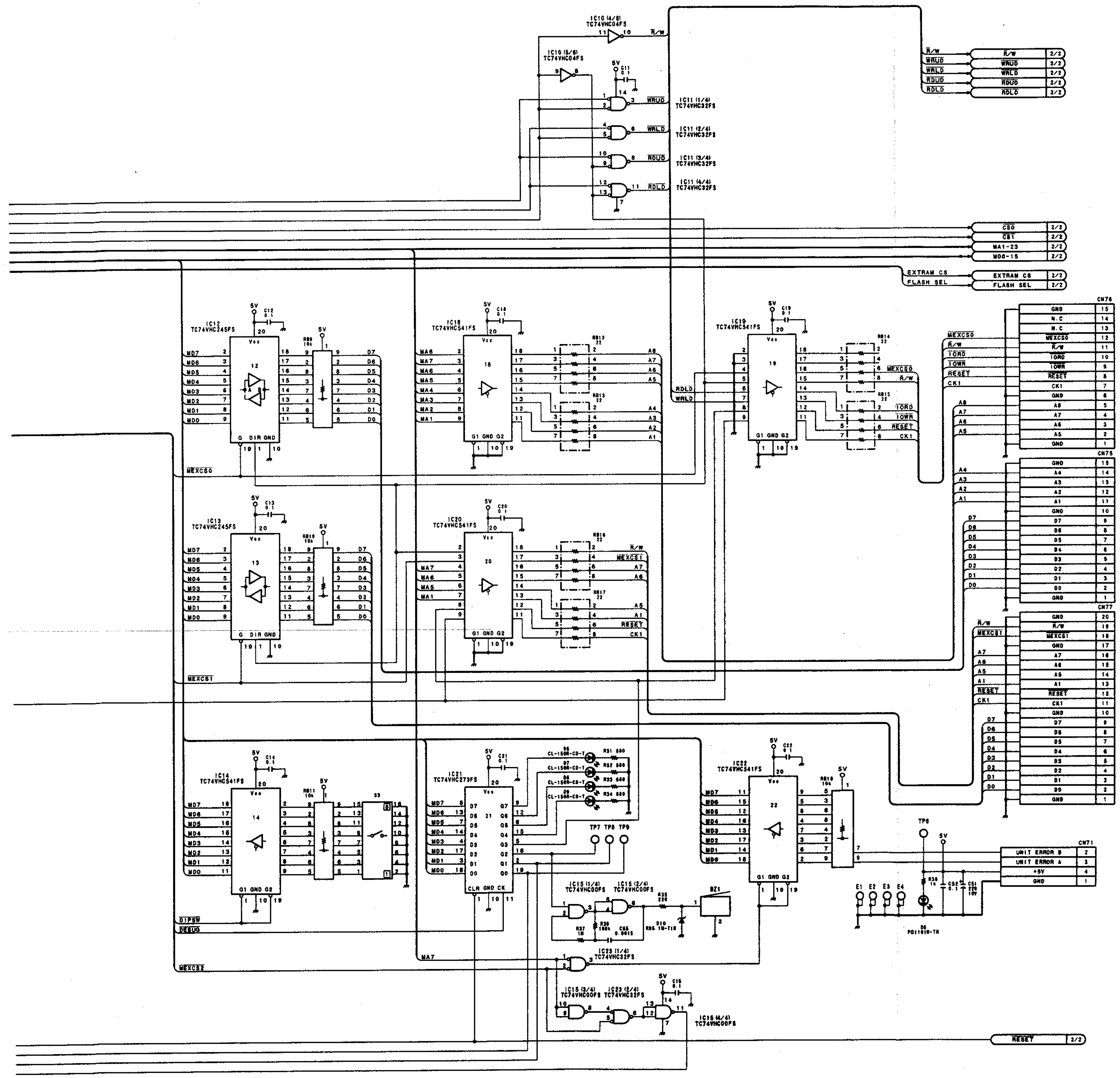

System Control Board
CPU-199 (1/2)
BKDS-M1010
BOARD NO. 1-658-381-11
LOT NO. 506-
B-¥SJXA079-CPU199

I J K L M N O P

BKDS-M1010 (SY) : S/N 10001 and Higher

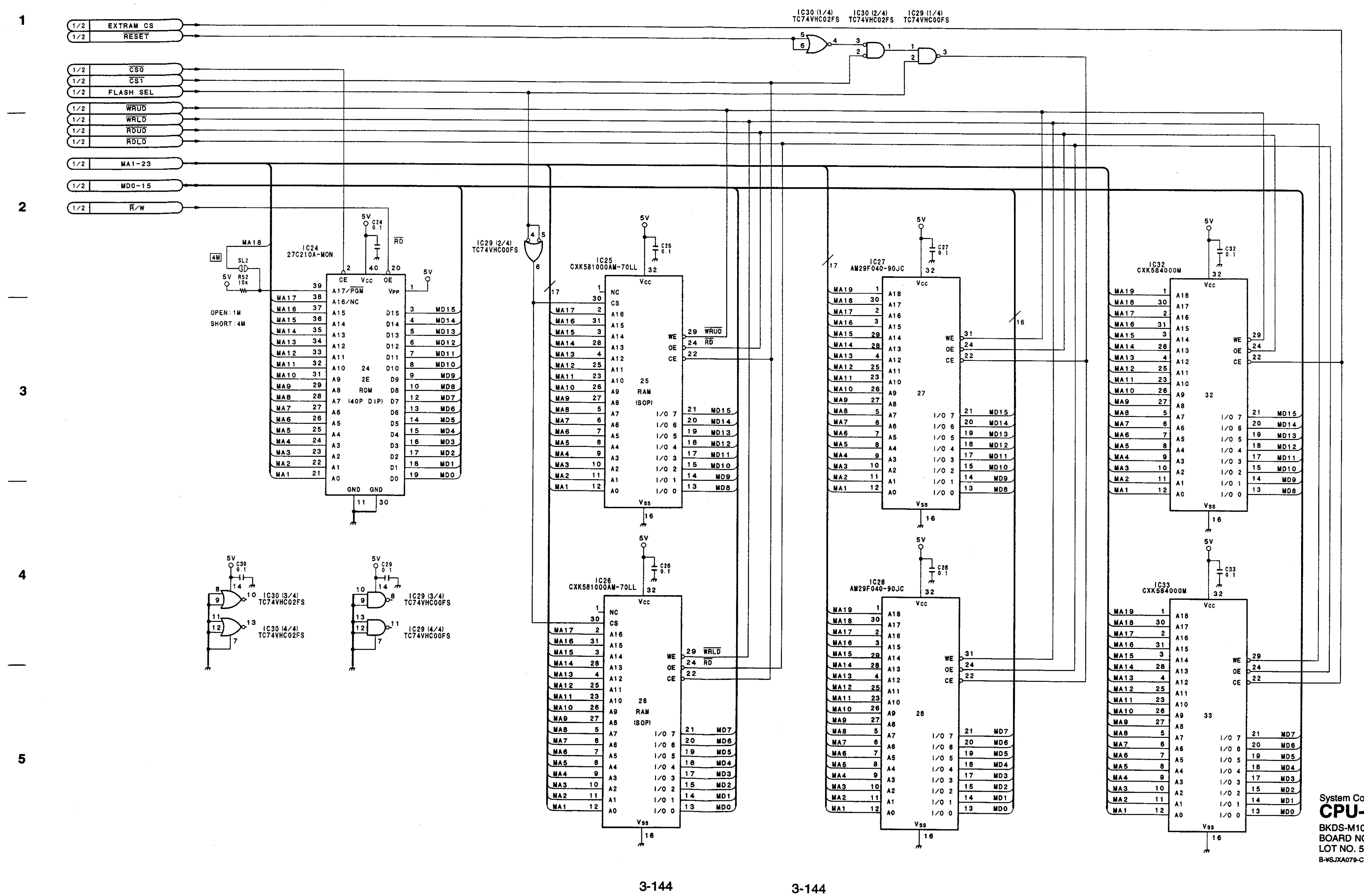

System Control Board
CPU-199 (2/2)
BKDS-M1010
BOARD NO. 1-658-381-11
LOT NO. 506-
B-¥SJXA079-CPU199

A B C D E F G H

BKDS-2031 (SY) : S/N 10001 and Higher

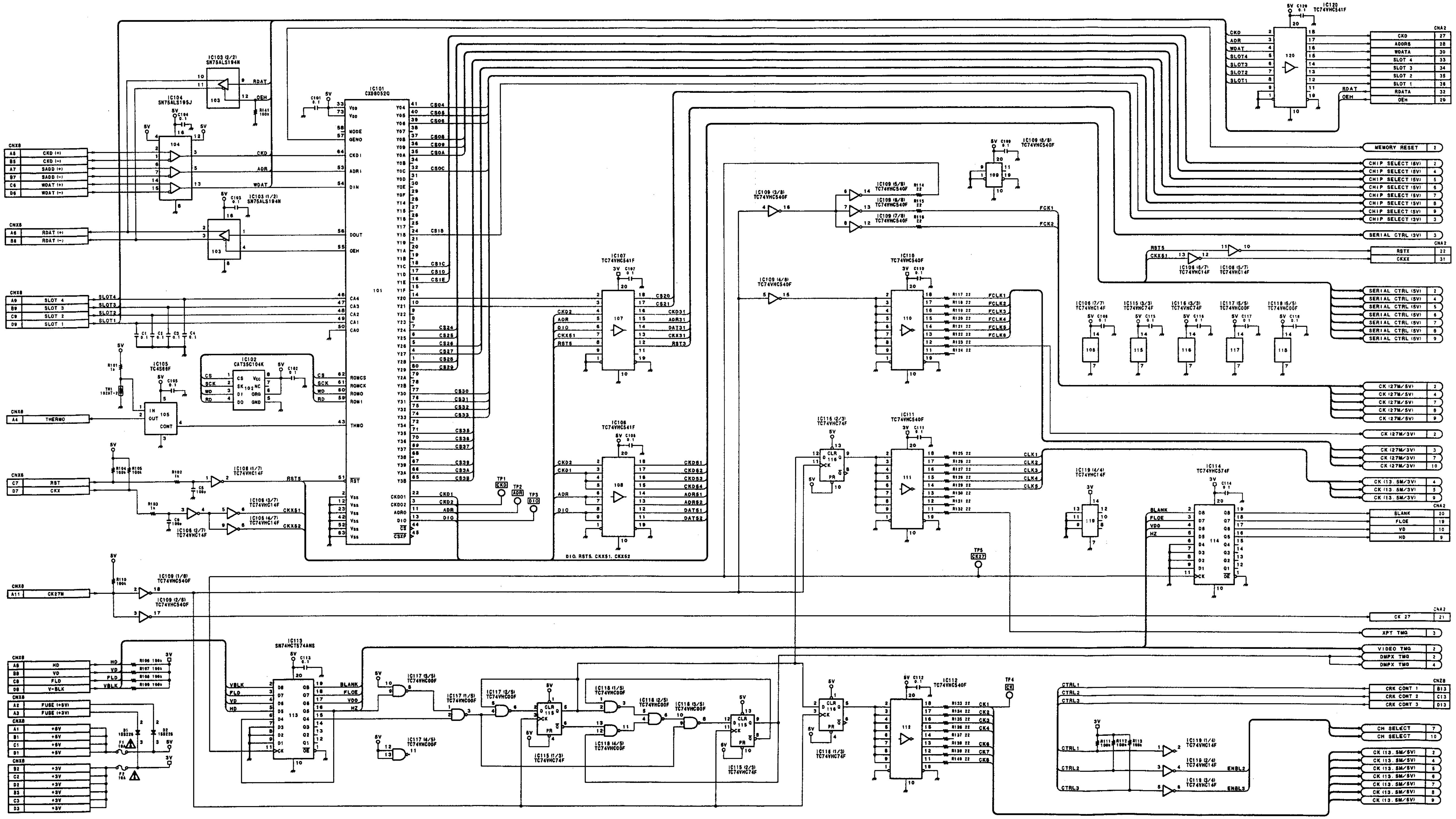

Chromakey Board
CRK-10 (1/10)
BKDS-2031
BOARD NO. 1-658-760-12
LOT NO. 401-
FOR DVS-7000
B-VSJX003-CRK10

I J K L M N O P

BKDS-2031 (SY) : S/N 10001 and Higher

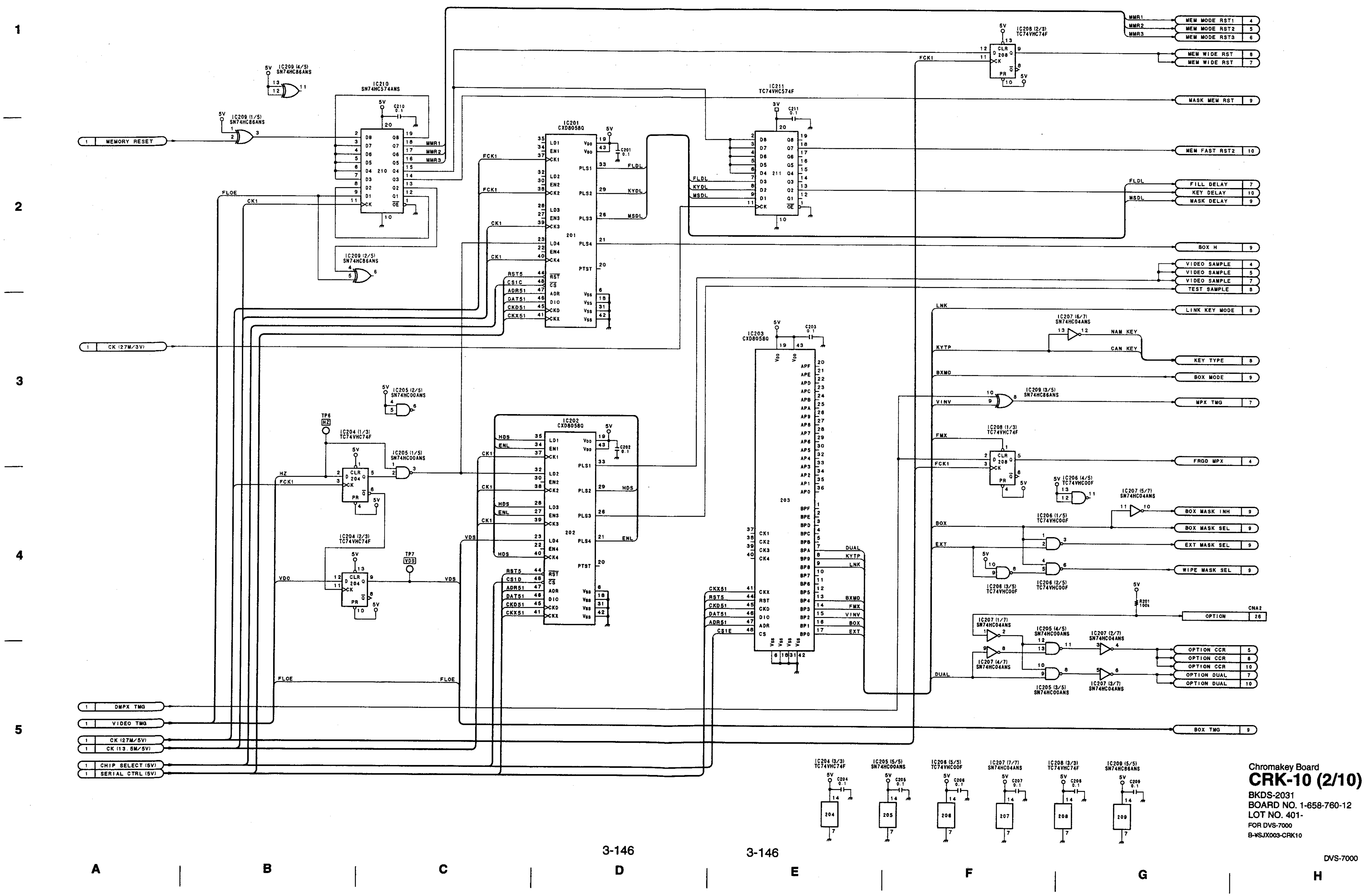

Chromakey Board
CRK-10 (2/10)
BKDS-2031
BOARD NO. 1-658-760-12
LOT NO. 401-
FOR DVS-7000
B-¥SJX003-CRK10

BKDS-2031 (SY) : S/N 10001 and Higher

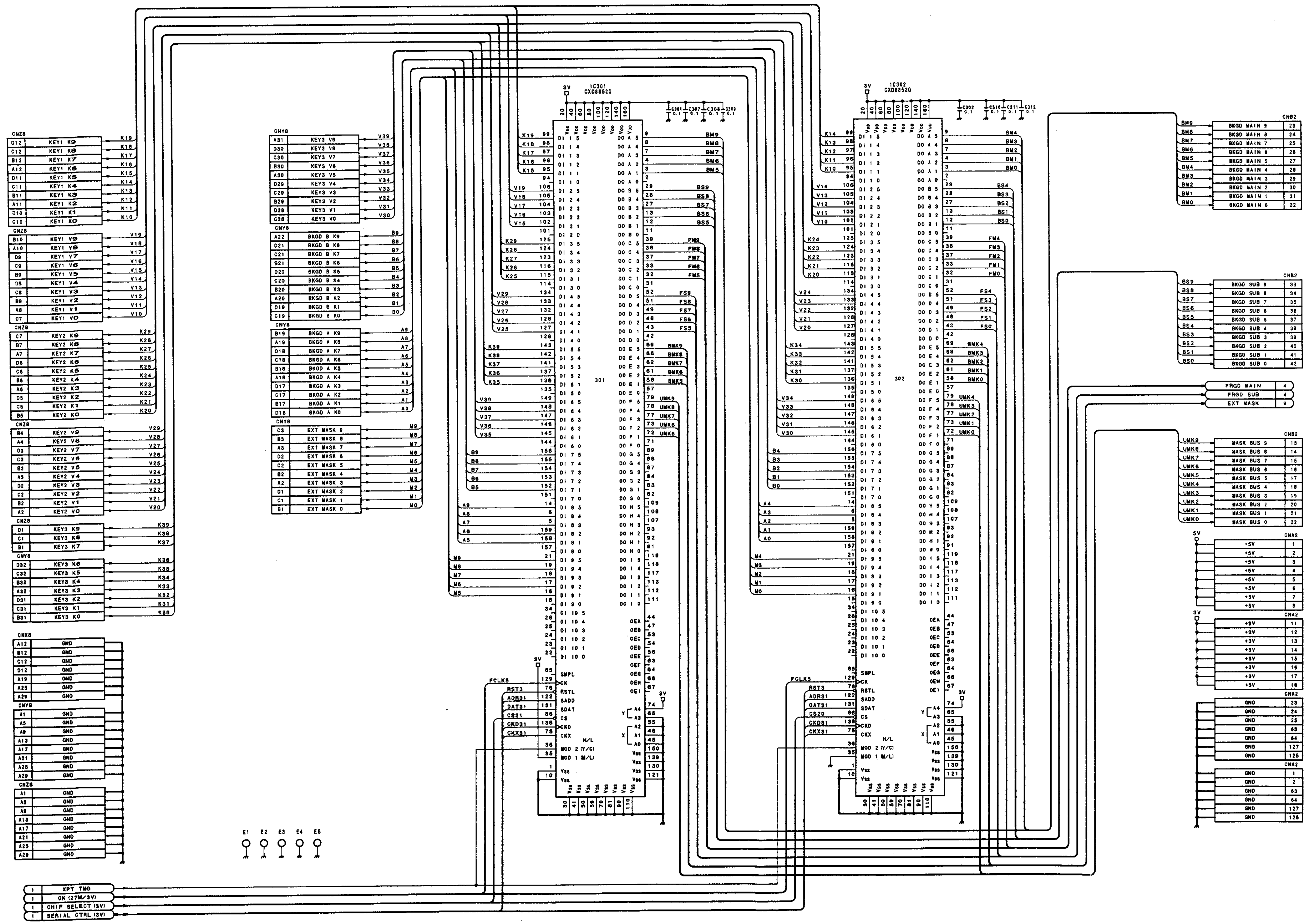

Chromakey Board
CRK-10 (3/10)
BKDS-2031
BOARD NO. 1-658-760-12
LOT NO. 401-
FOR DVS-7000
B-¥SJX003-CRK10

BKDS-2031 (SY) : S/N 10001 and Higher

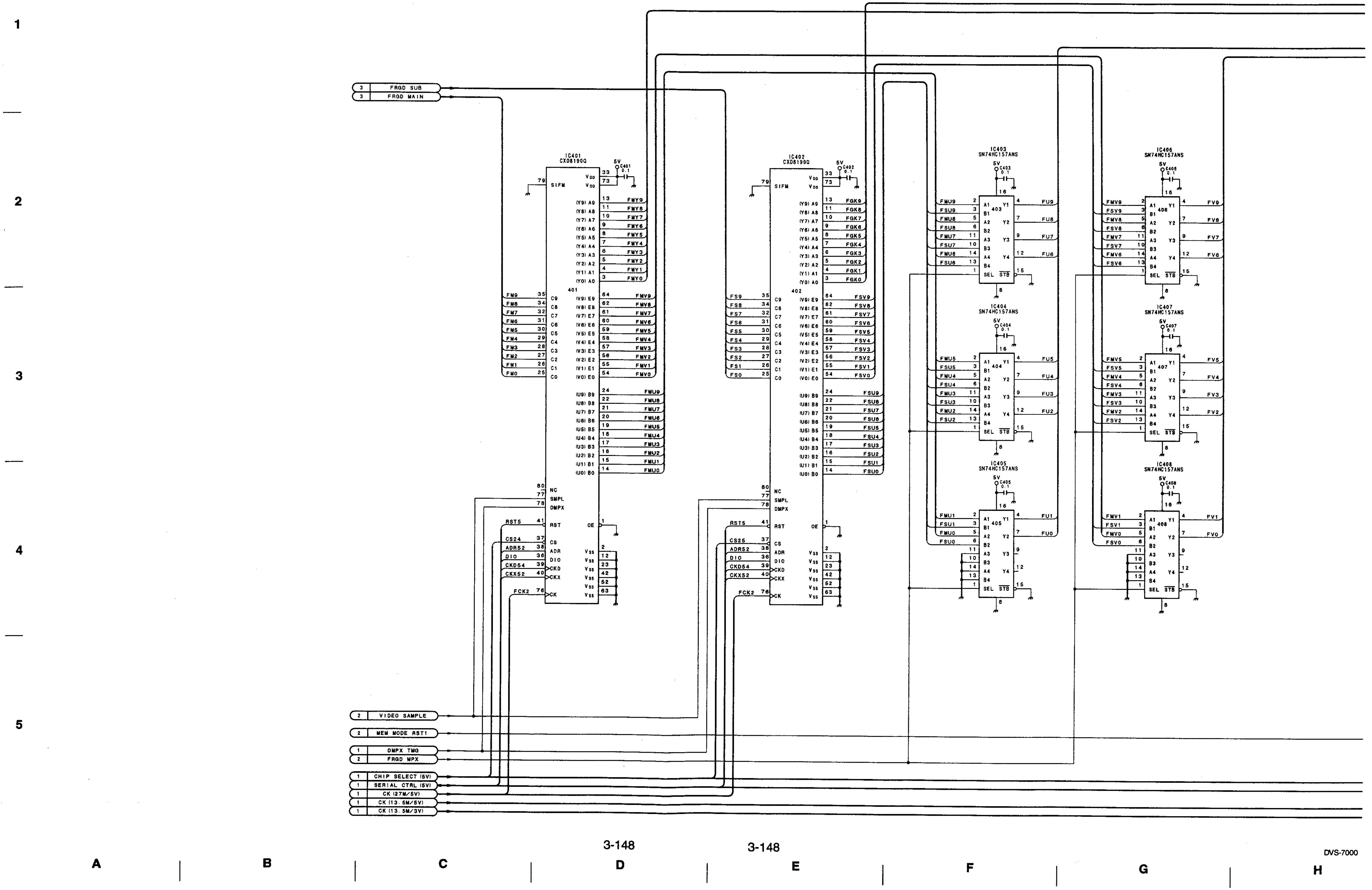

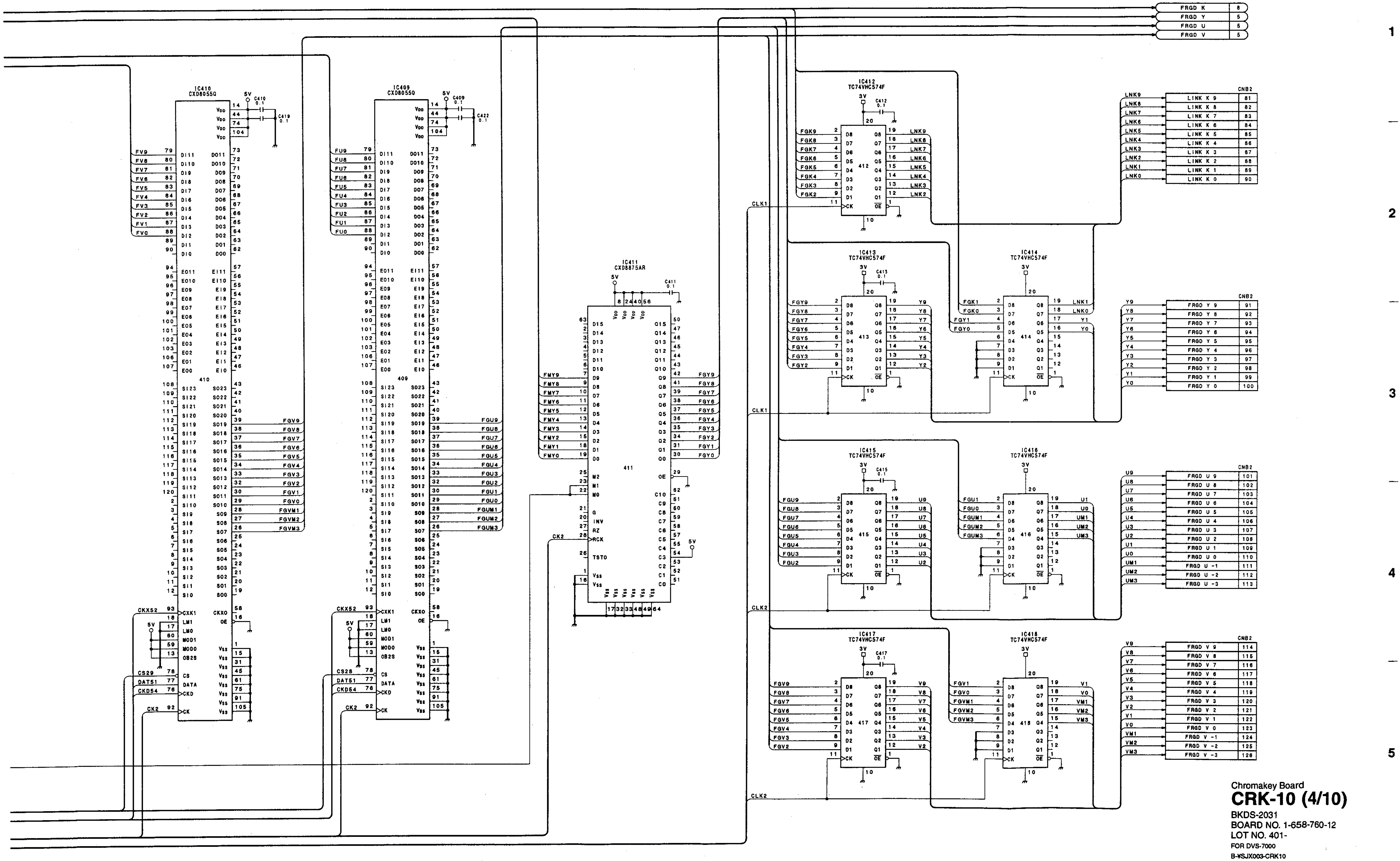

Chromakey Board
CRK-10 (4/10)
BKDS-2031
BOARD NO. 1-658-760-12
LOT NO. 401-
FOR DVS-7000
B-¥SJX003-CRK10

BKDS-2031 (SY) : S/N 10001 and Higher

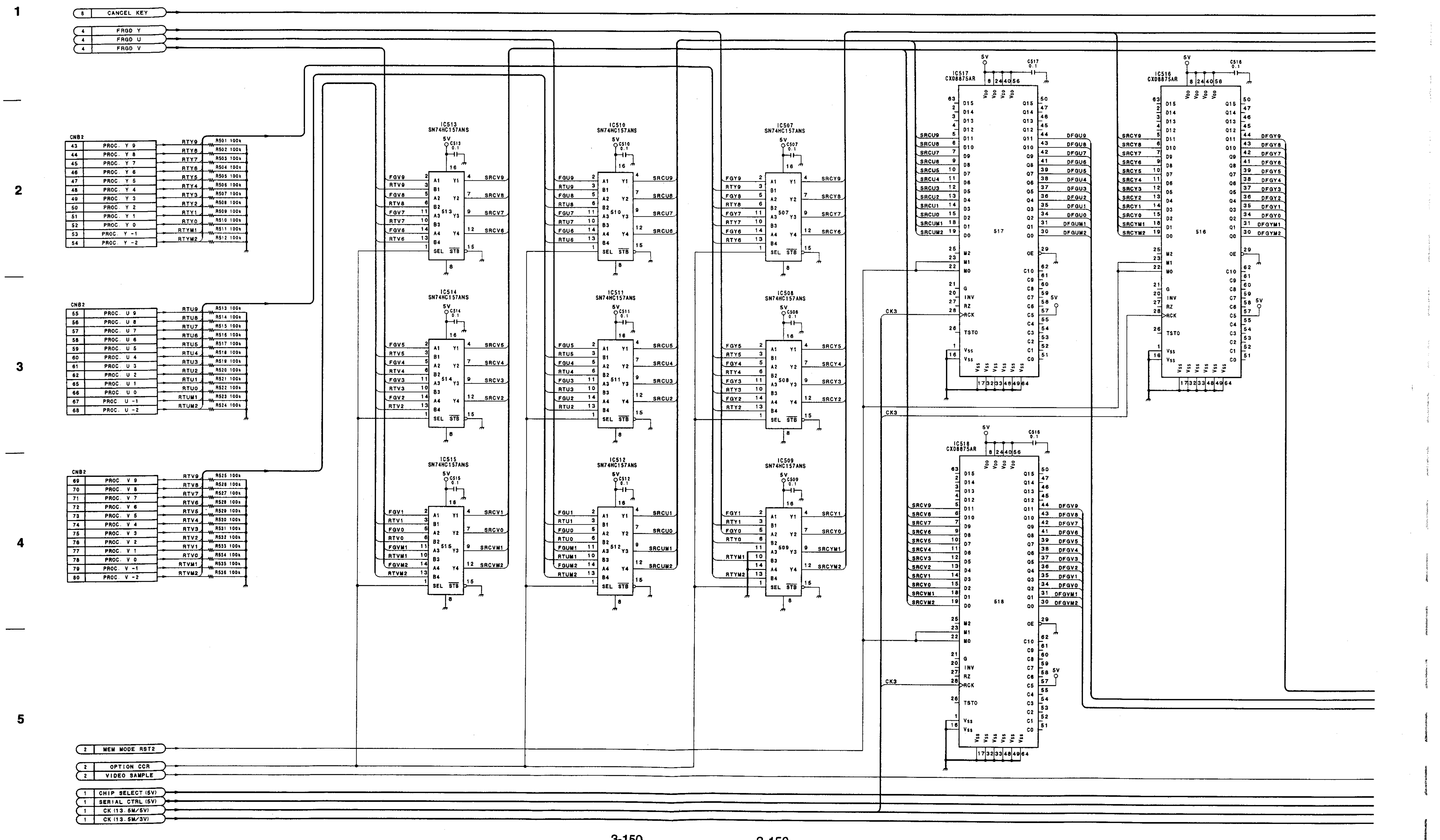

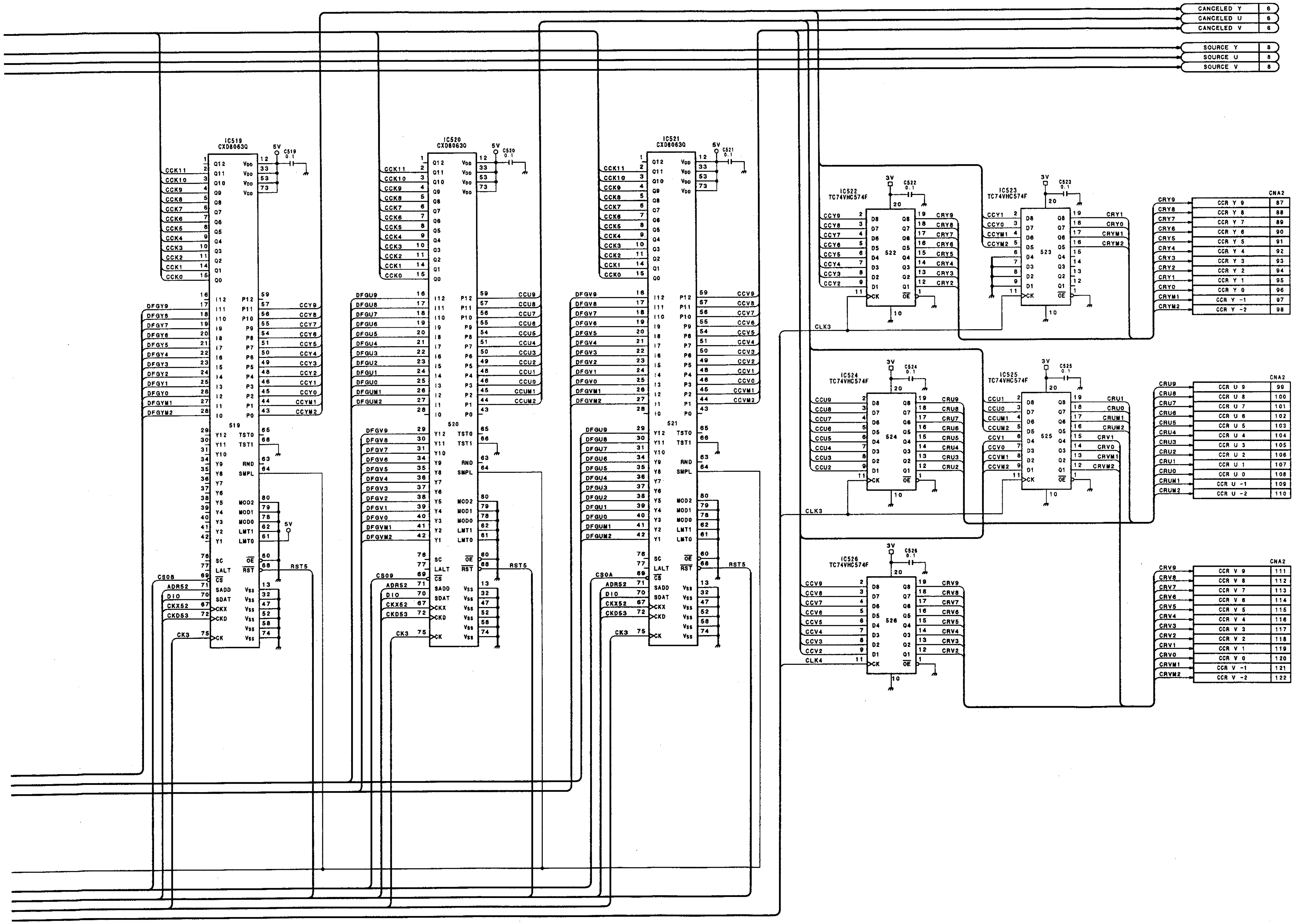

Chromakey Board
CRK-10 (5/10)
BKDS-2031
BOARD NO. 1-658-760-12
LOT NO. 401-
FOR DVS-7000
B-¥SJX003-CRK10

BKDS-2031 (SY) : S/N 10001 and Higher

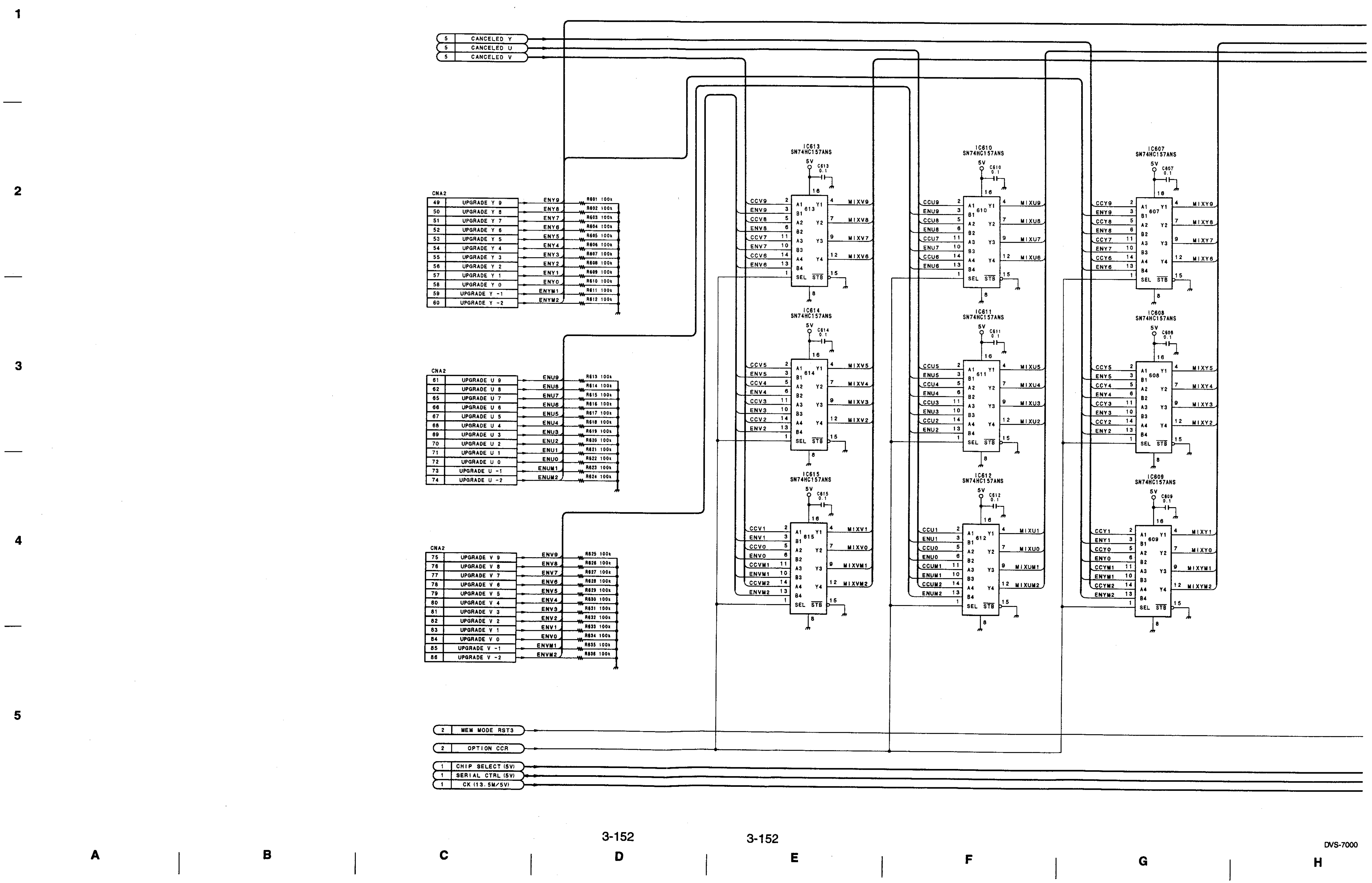

DVS-7000

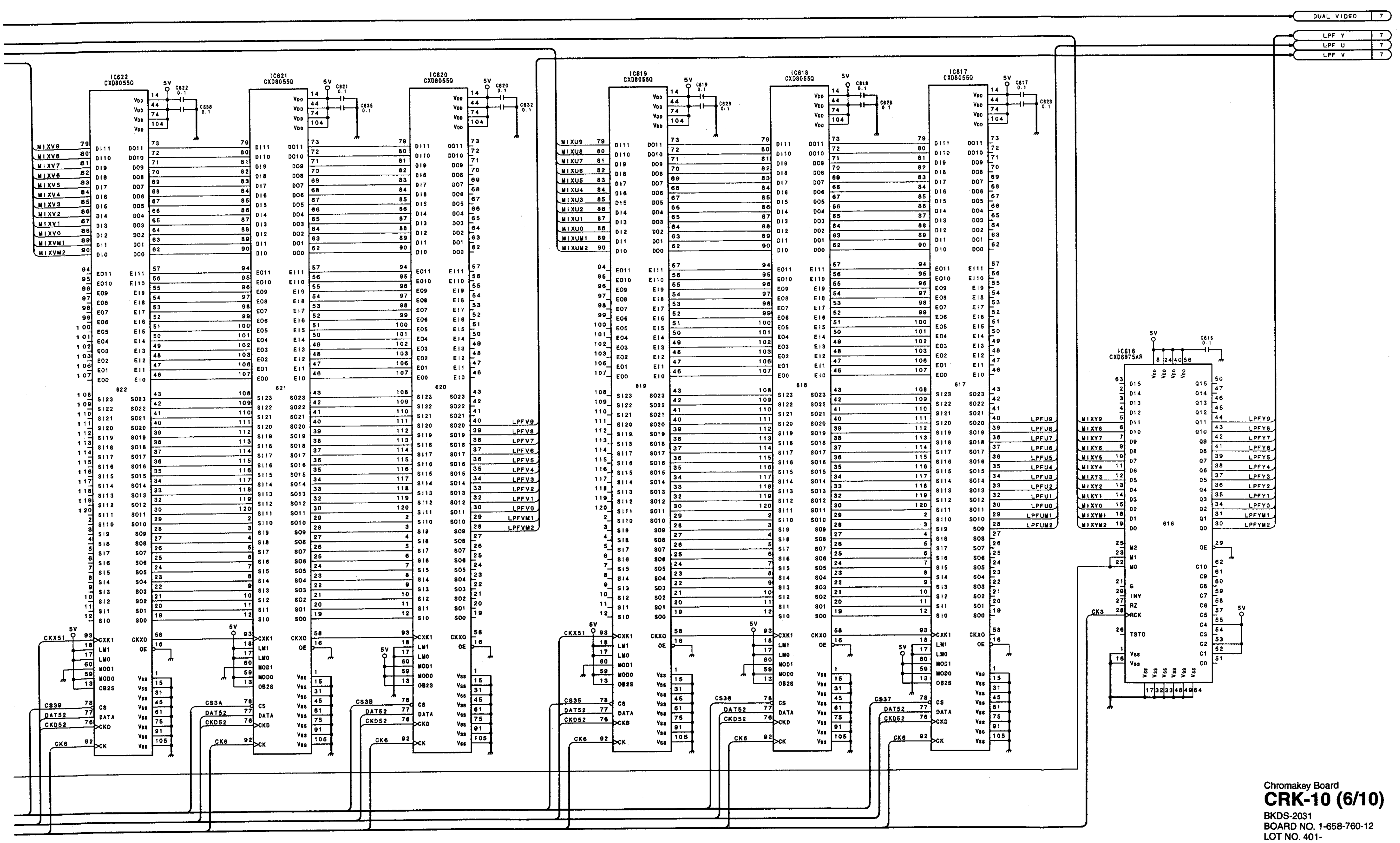

Chromakey Board
CRK-10 (6/10)
BKDS-2031
BOARD NO. 1-658-760-12
LOT NO. 401-
FOR DVS-7000
B-¥SJX003-CRK10

BKDS-2031 (SY) : S/N 10001 and Higher

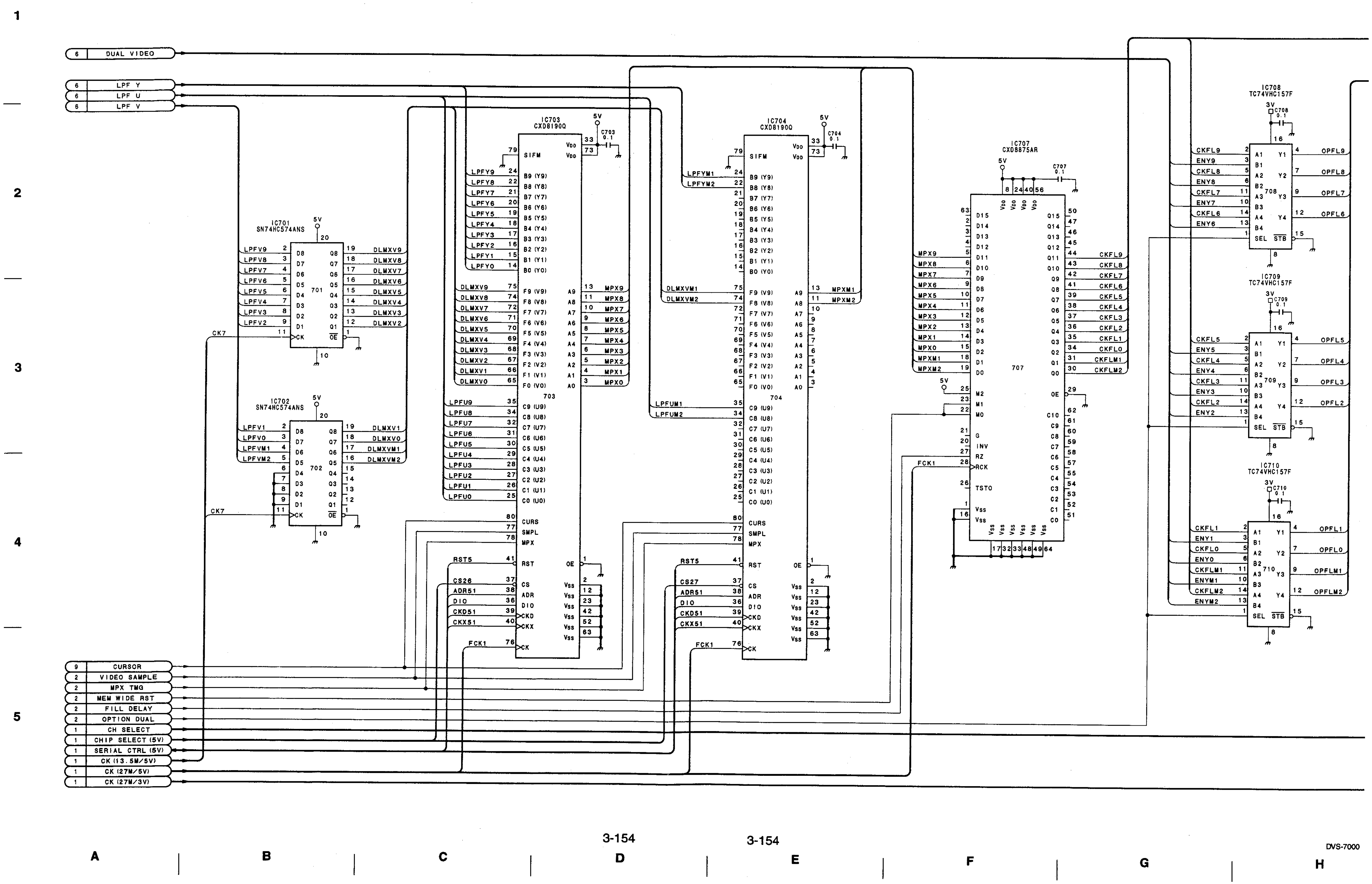

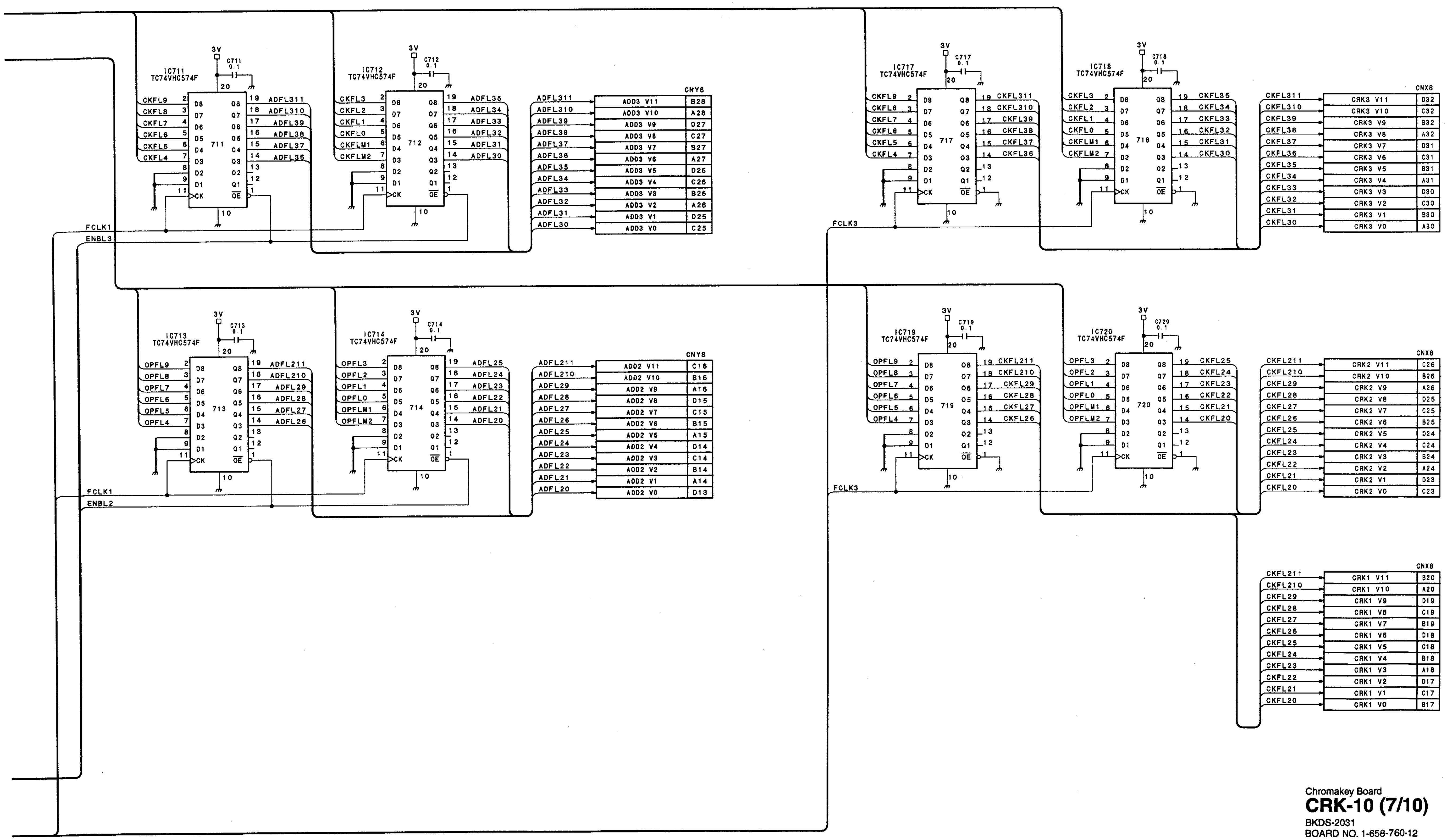

Chromakey Board
CRK-10 (7/10)
BKDS-2031
BOARD NO. 1-658-760-12
LOT NO. 401-
FOR DVS-7000
B-¥SJX003-CRK10

BKDS-2031 (SY) : S/N 10001 and Higher

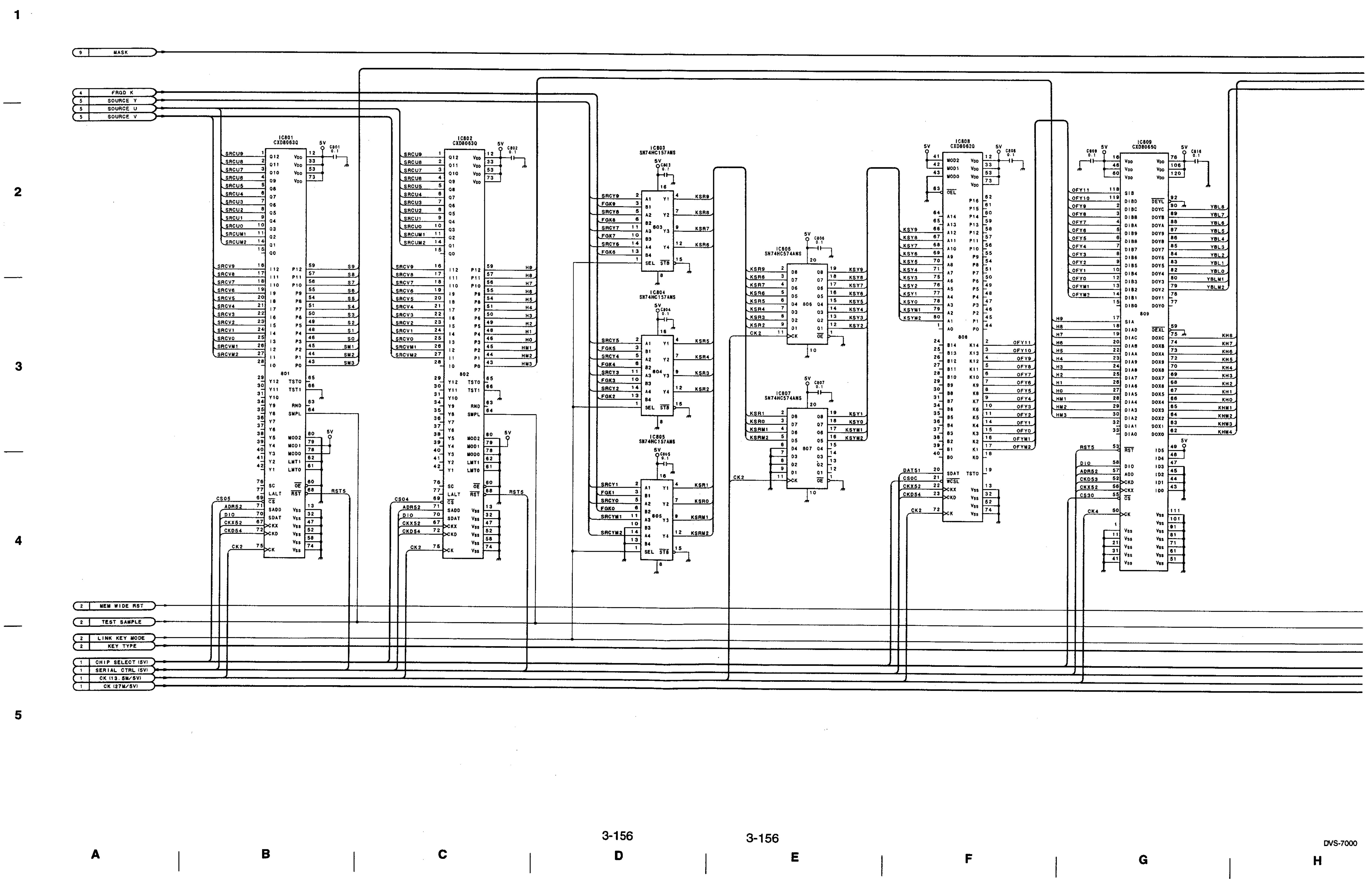

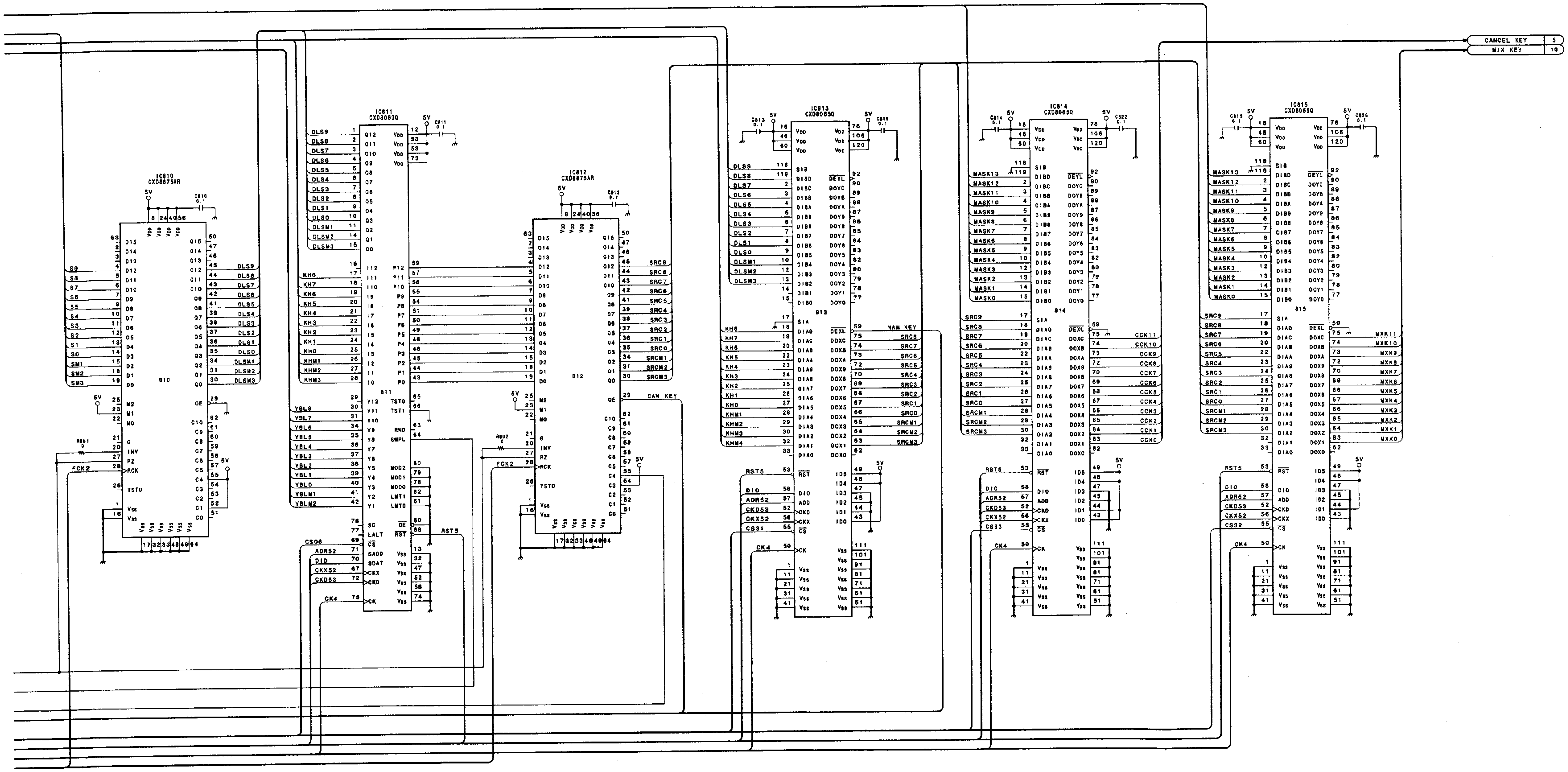

Chromakey Board
CRK-10 (8/10)
BKDS-2031
BOARD NO. 1-658-760-12
LOT NO. 401-
FOR DVS-7000
B-¥SJX003-CRK10

BKDS-2031 (SY) : S/N 10001 and Higher

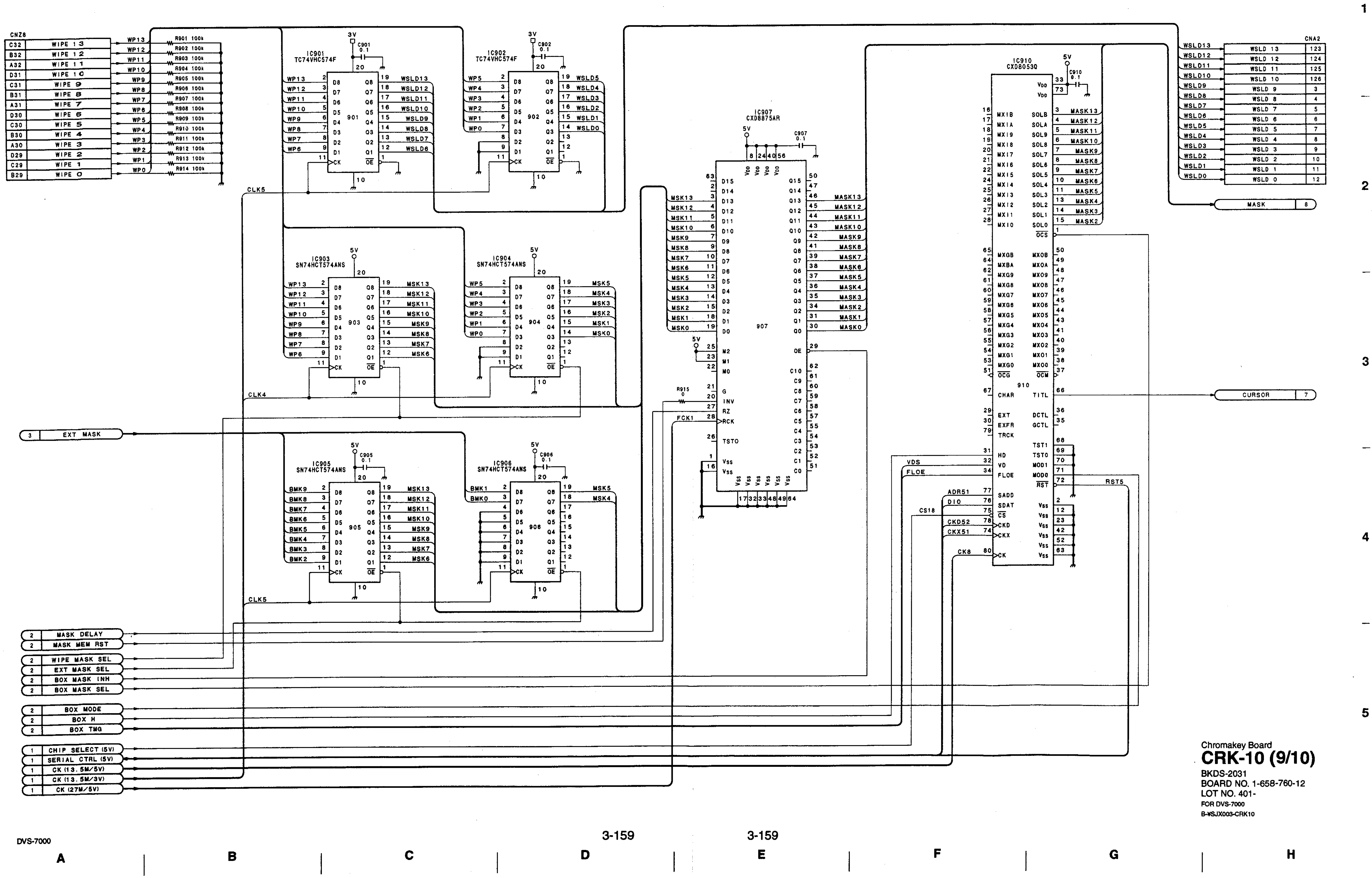

Chromakey Board
CRK-10 (9/10)
BKDS-2031
BOARD NO. 1-658-760-12
LOT NO. 401-
FOR DVS-7000
B-¥SJX003-CRK10

BKDS-2031 (SY) : S/N 10001 and Higher

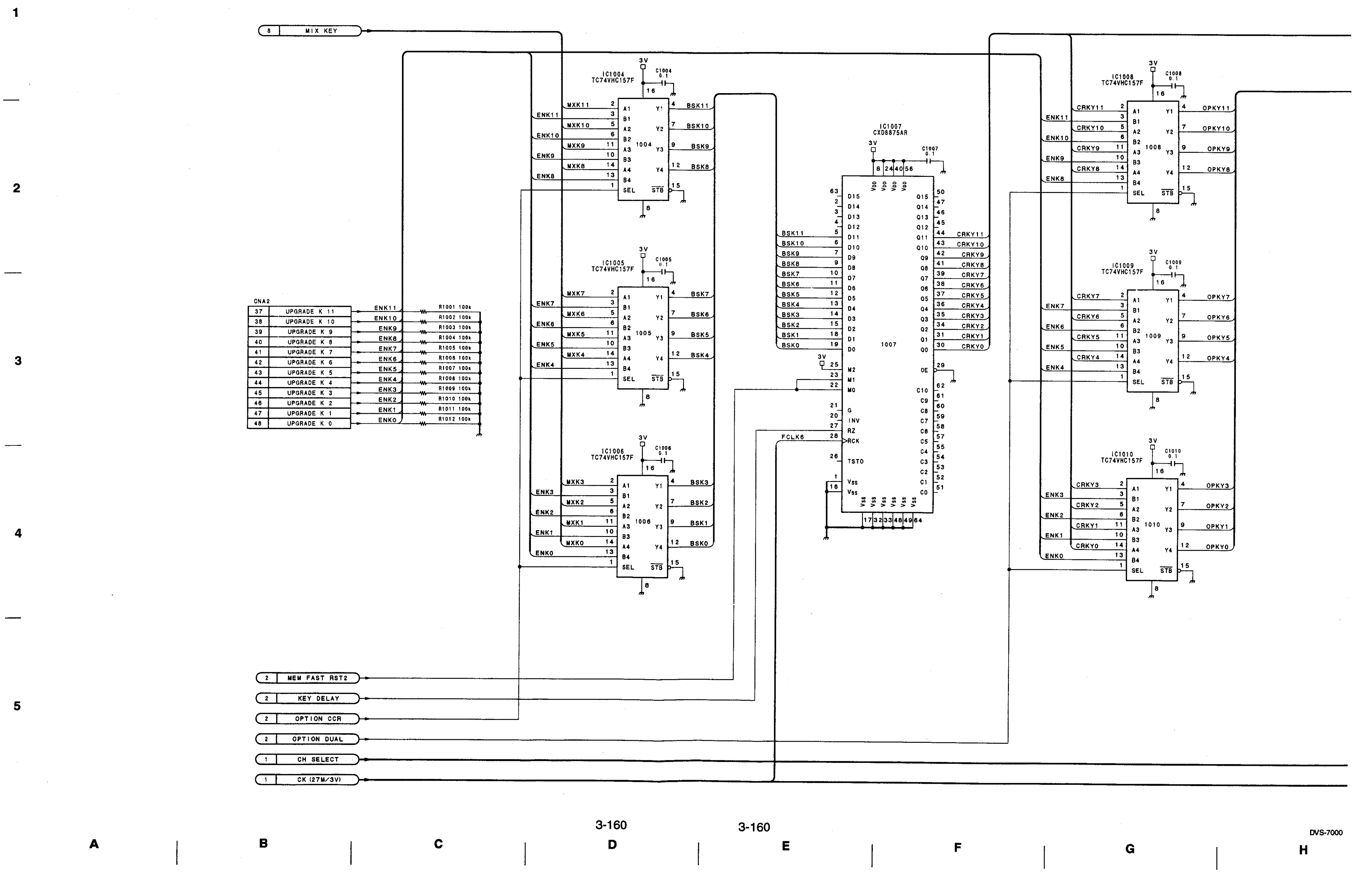

DVS-7000

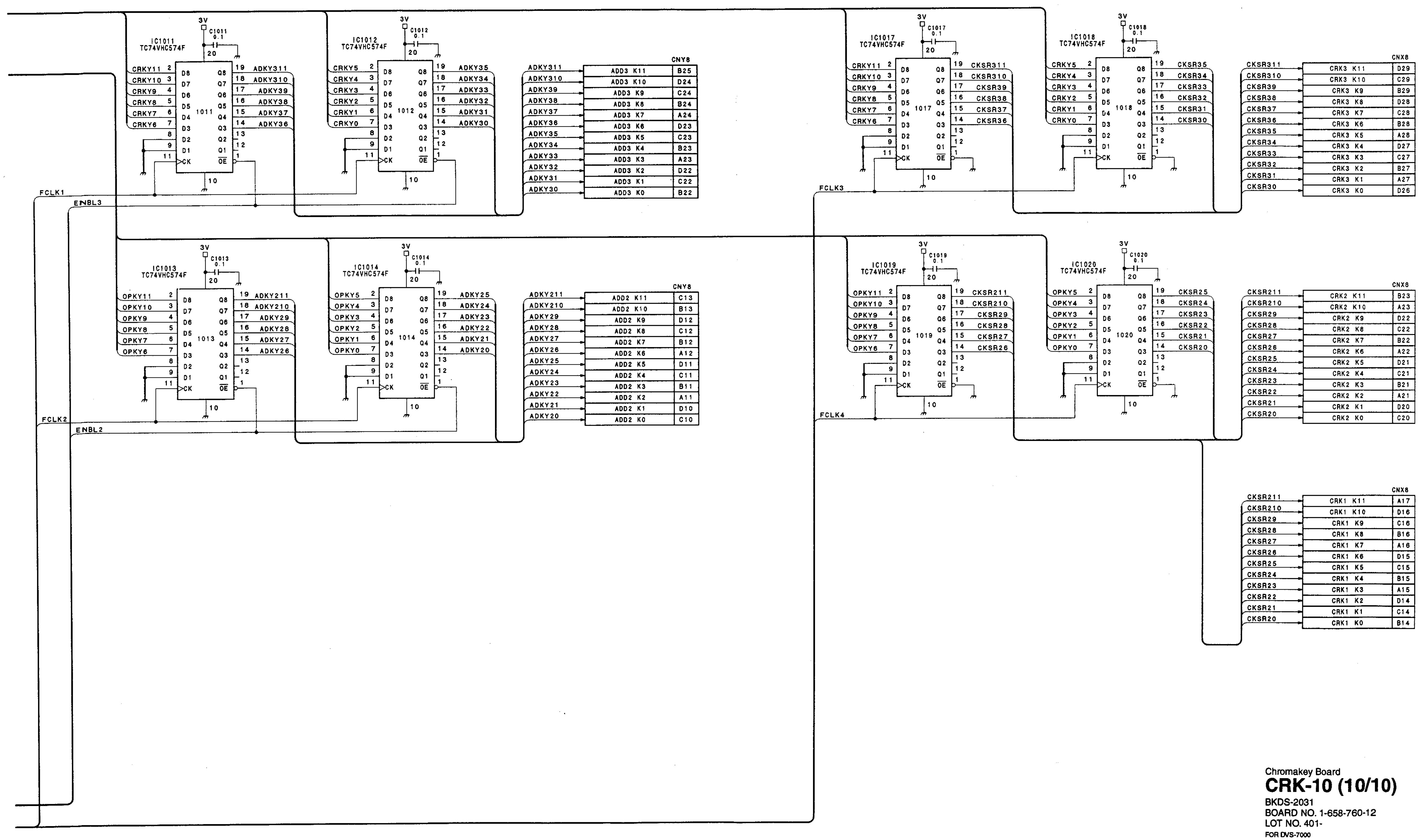

Chromakey Board
CRK-10 (10/10)
BKDS-2031
BOARD NO. 1-658-760-12
LOT NO. 401-
FOR DVS-7000
B-¥SJX003-CRK10

BKDS-2032 (SY) : S/N 10001 and Higher

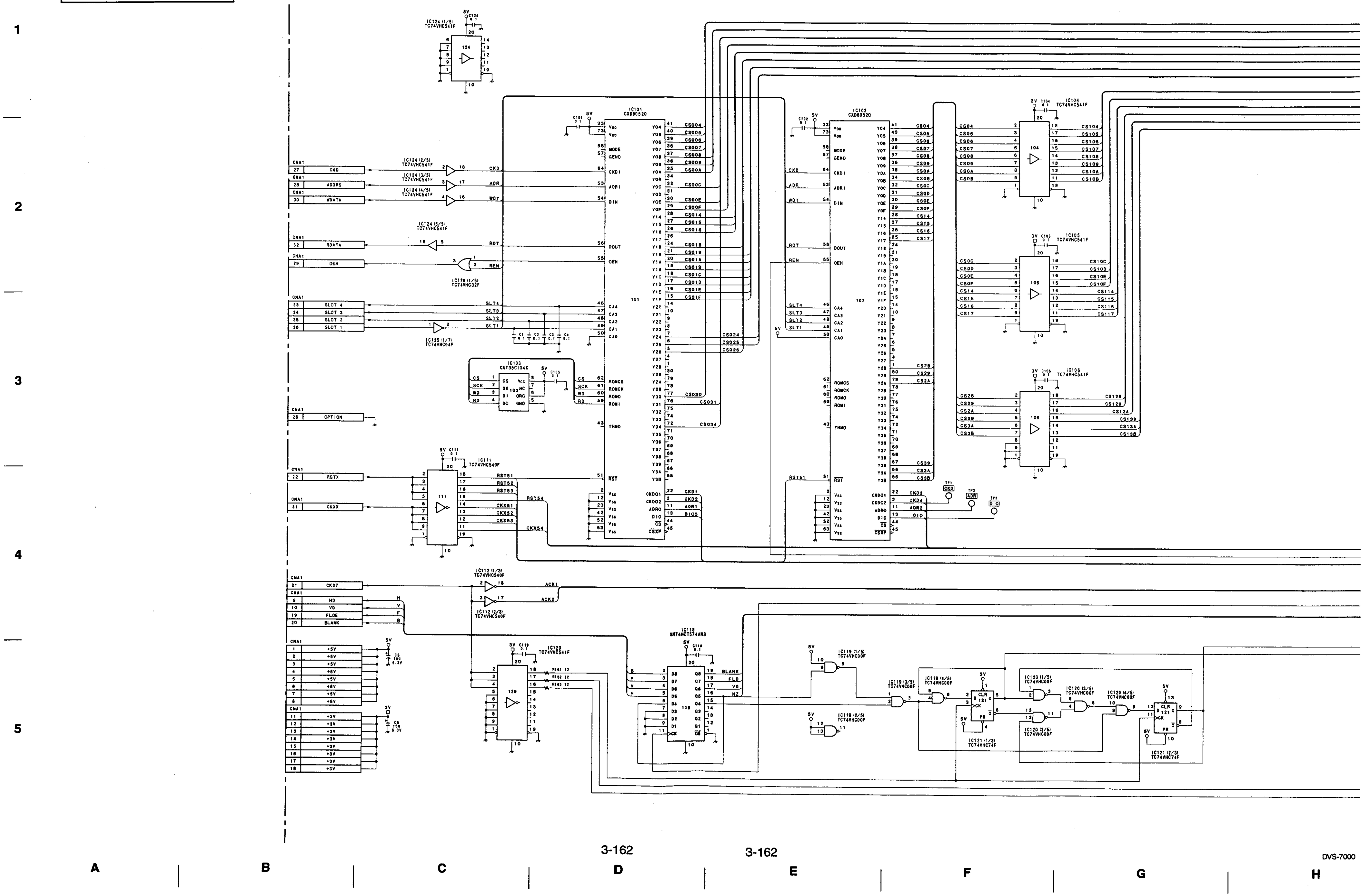

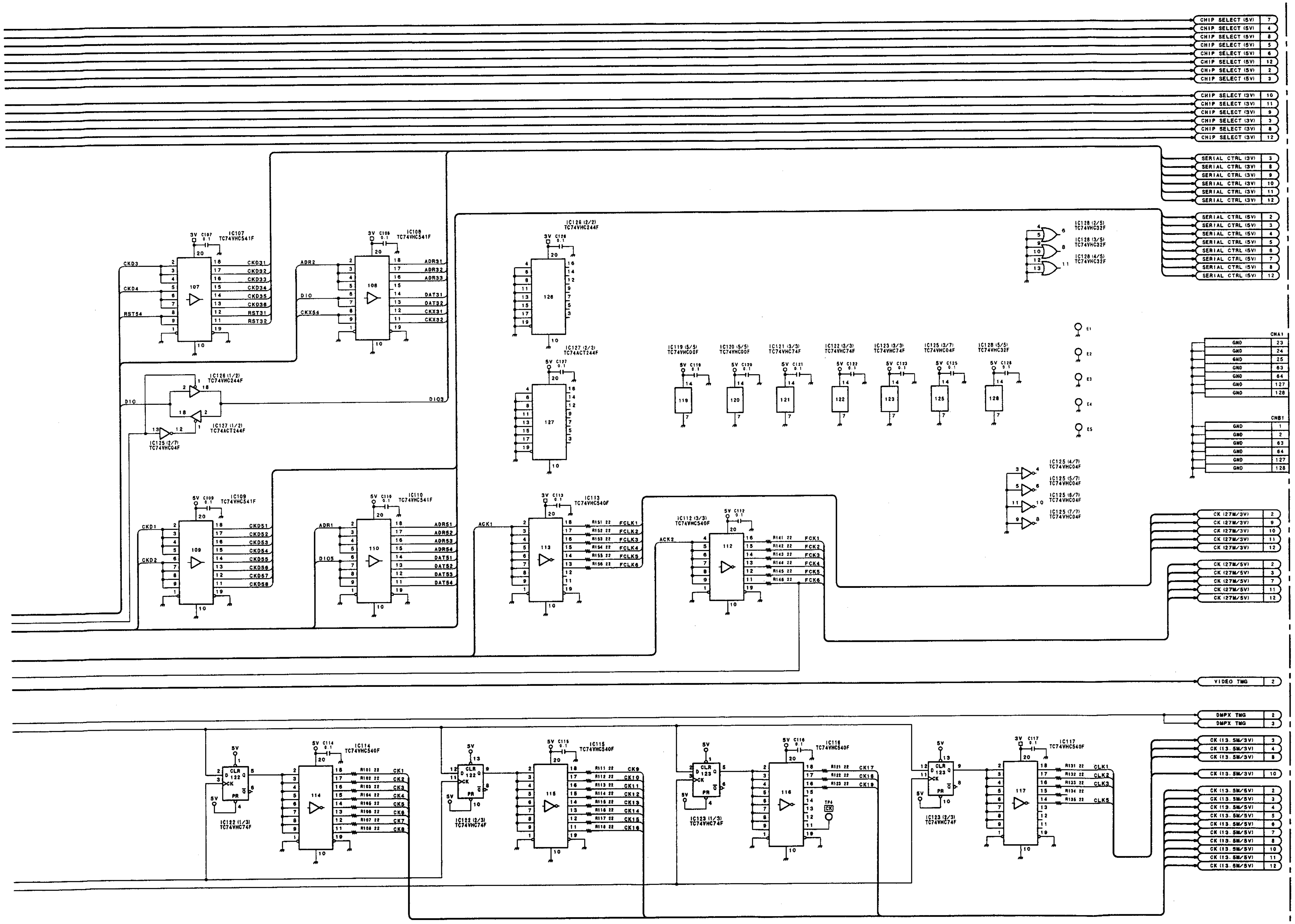

Chromakey Upgrade Board
CRK-11 (1/12)
BKDS-2032
BOARD NO. 1-654-681-11
LOT NO. 407-
FOR DVS-7000
B-¥SJX003-CRK11

BKDS-2032 (SY) : S/N 10001 and Higher

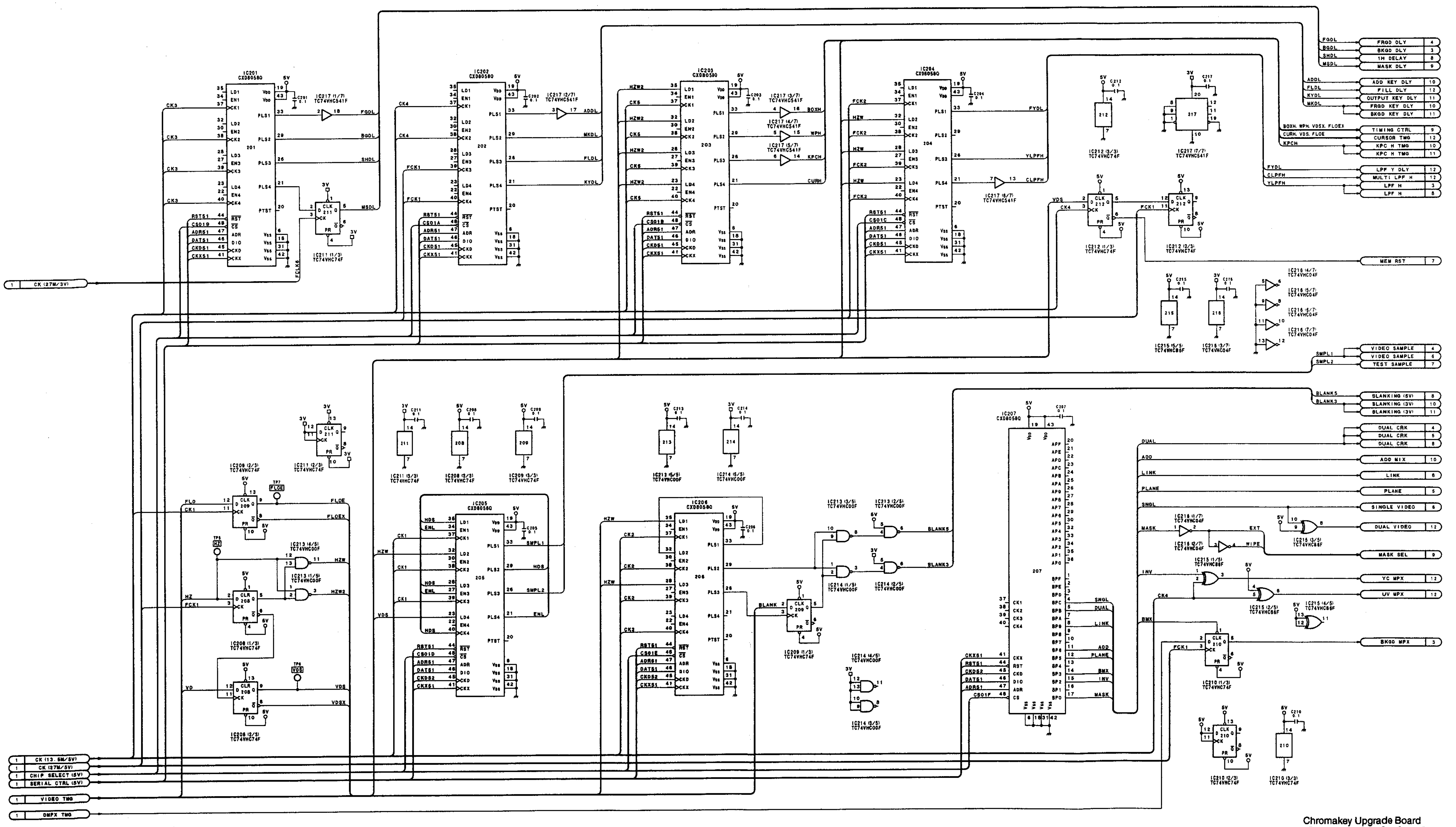

Chromakey Upgrade Board
CRK-11 (2/12)
BKDS-2032
BOARD NO. 1-654-681-11
LOT NO. 407-
FOR DVS-7000
B-¥SJX003-CRK11

A B C D E F G H

CRK-11 (3/12) Chromakey Upgrade Board

BKDS-2032 (SY) : S/N 10001 and Higher

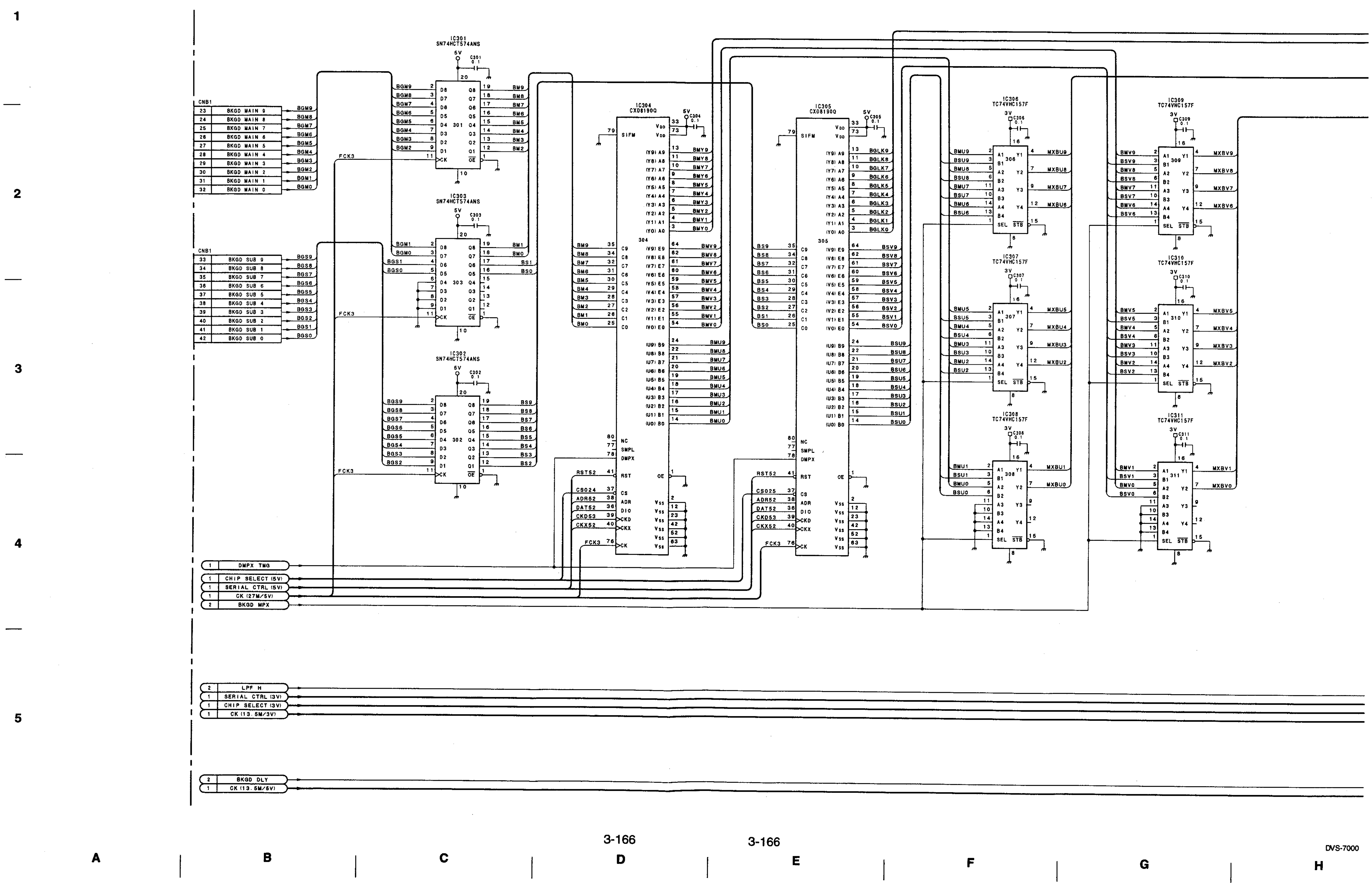

3-166

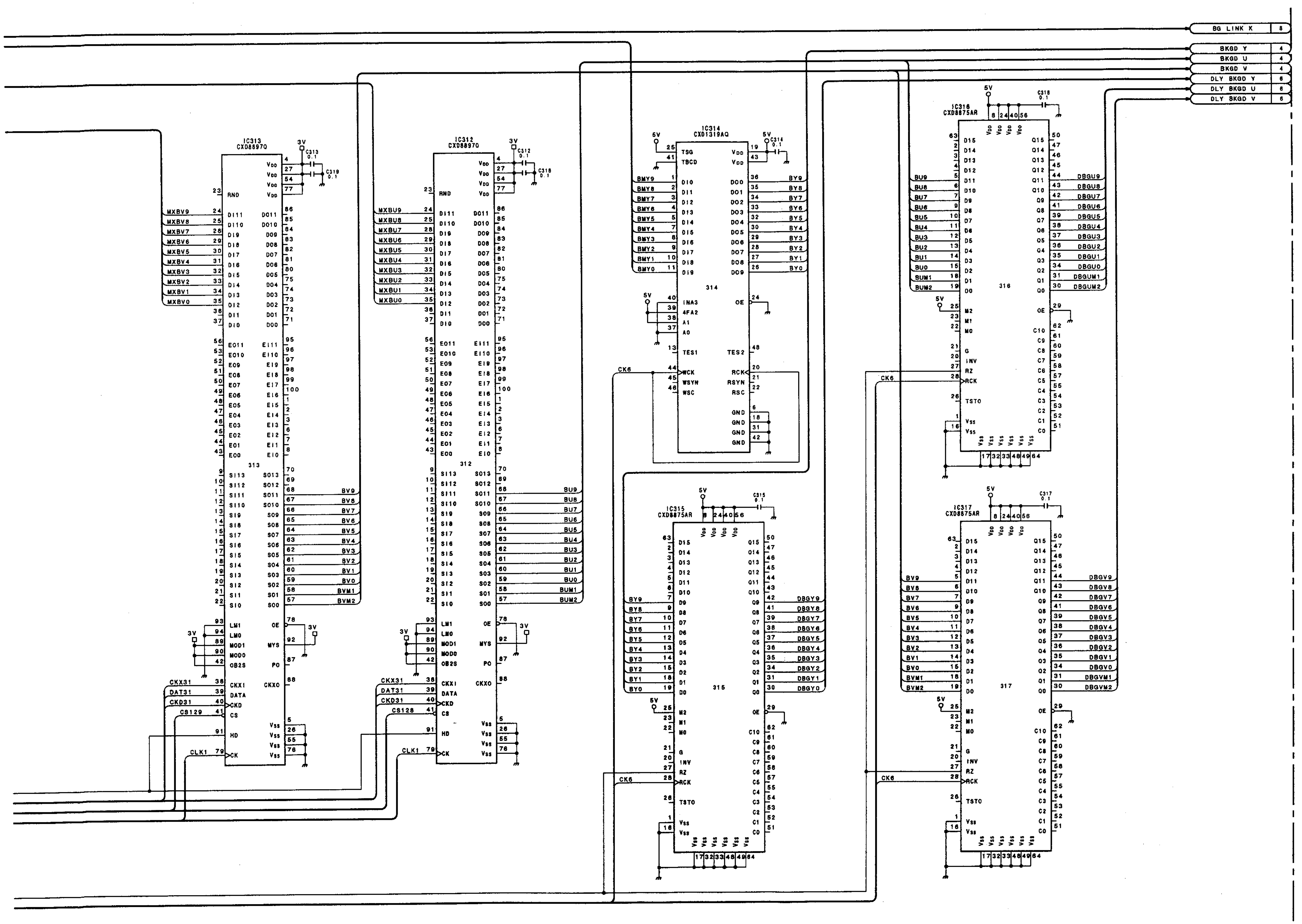

Chromakey Upgrade Board
CRK-11 (3/12)
BKDS-2032
BOARD NO. 1-654-681-11
LOT NO. 407-
FOR DVS-7000
B-¥SJX003-CRK11

I J K L M N O P

BKDS-2032 (SY) : S/N 10001 and Higher

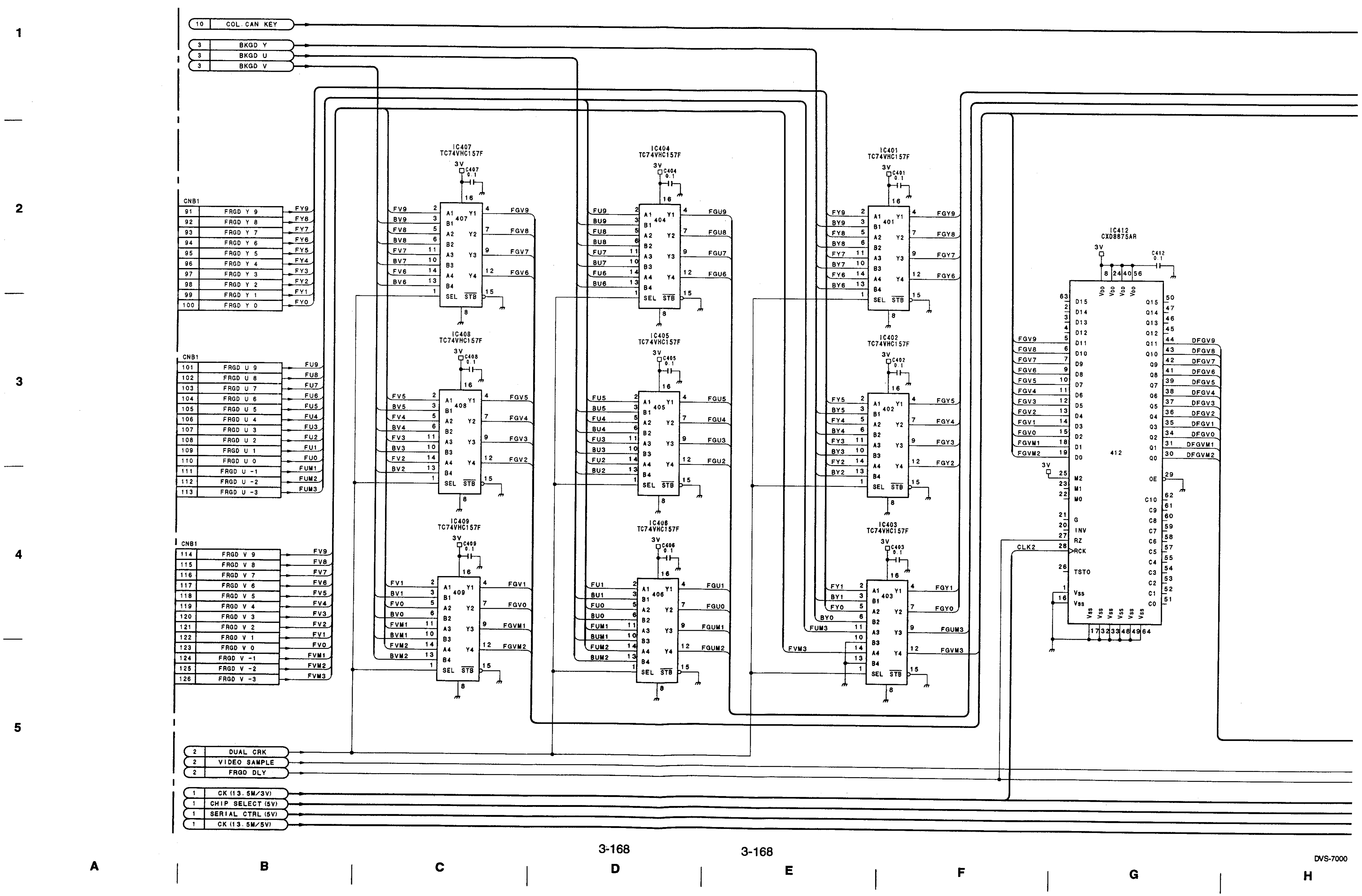

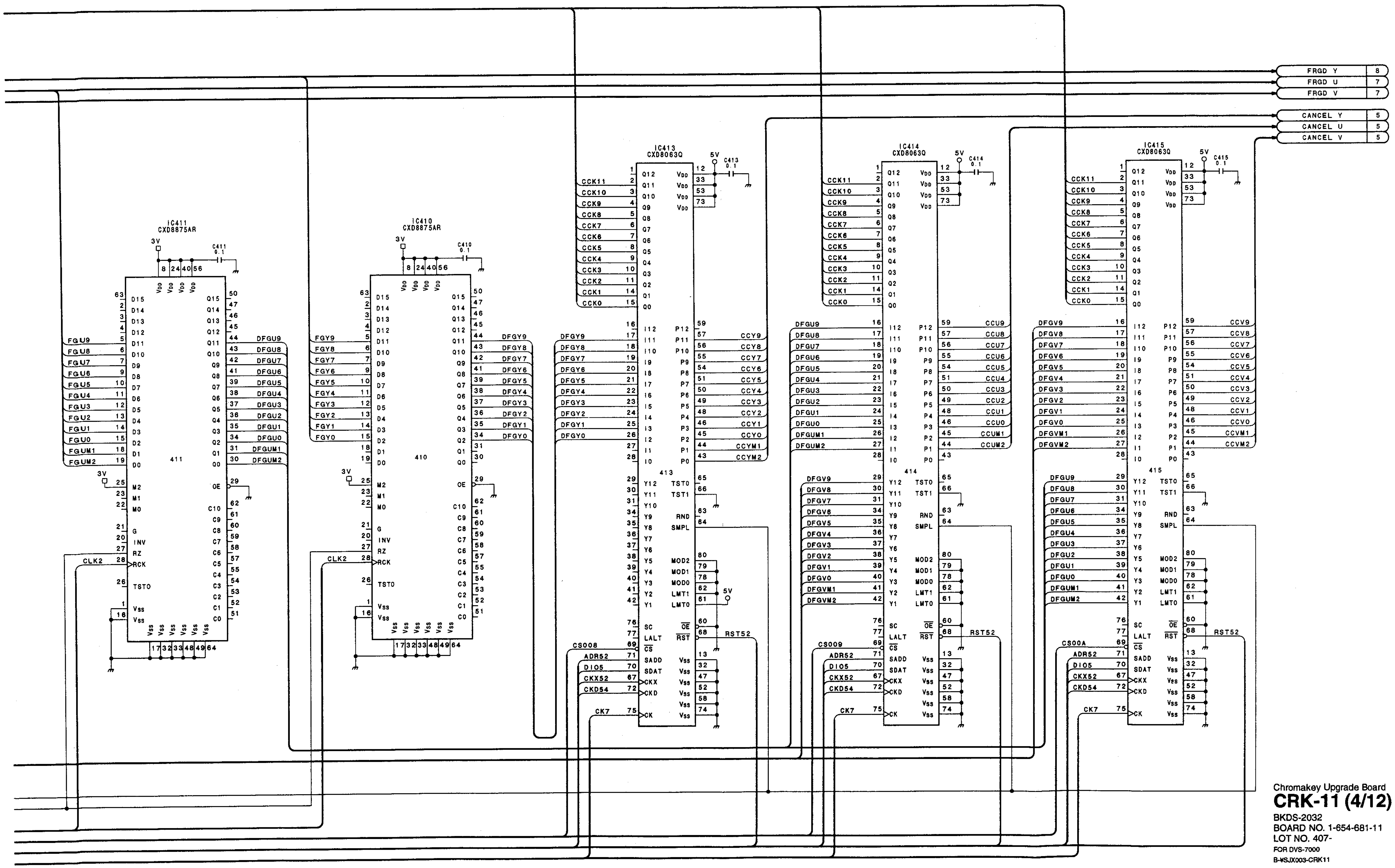

Chromakey Upgrade Board
CRK-11 (4/12)
BKDS-2032
BOARD NO. 1-654-681-11
LOT NO. 407-
FOR DVS-7000
B-¥SJX003-CRK11

BKDS-2032 (SY) : S/N 10001 and Higher

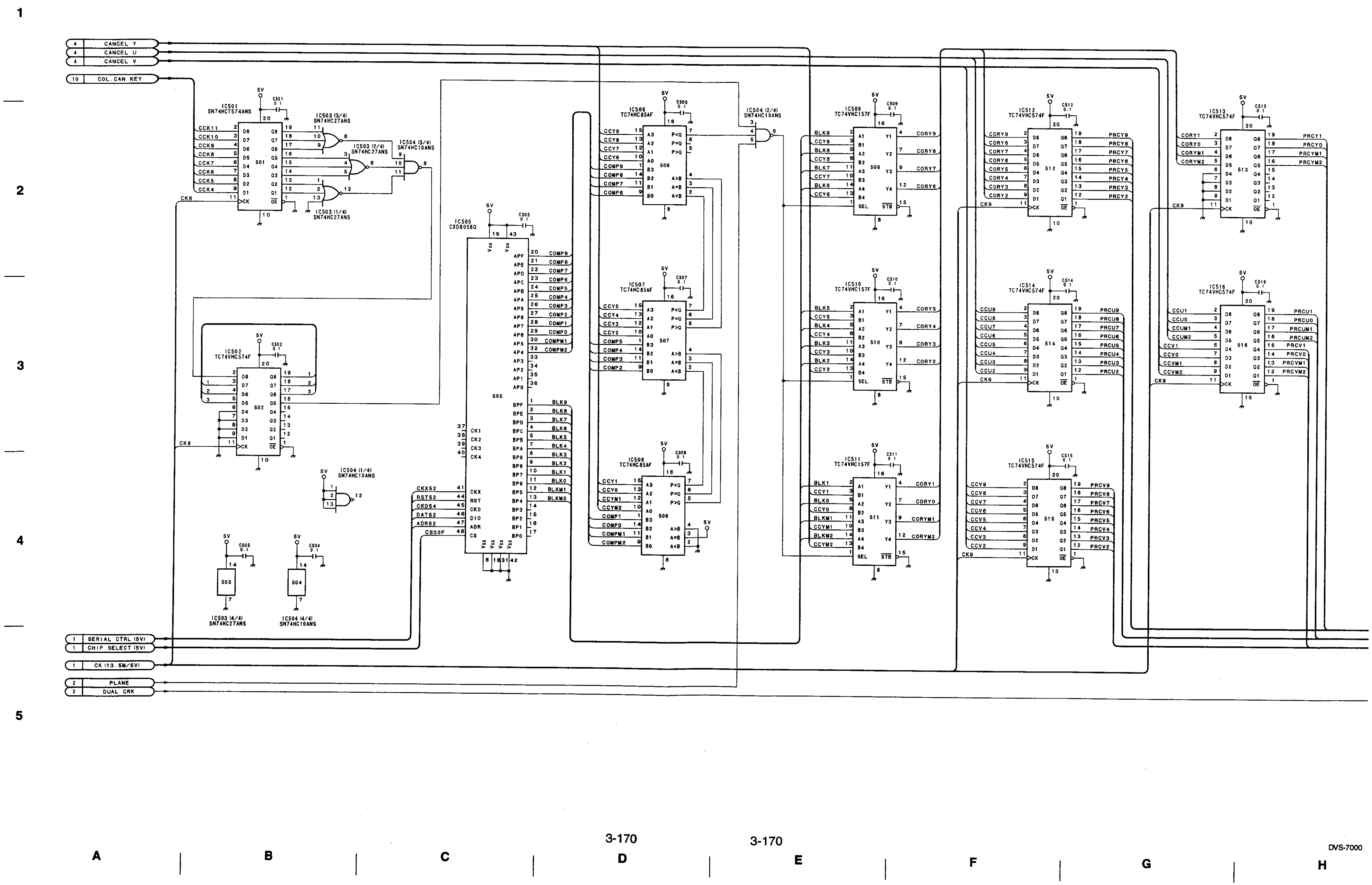

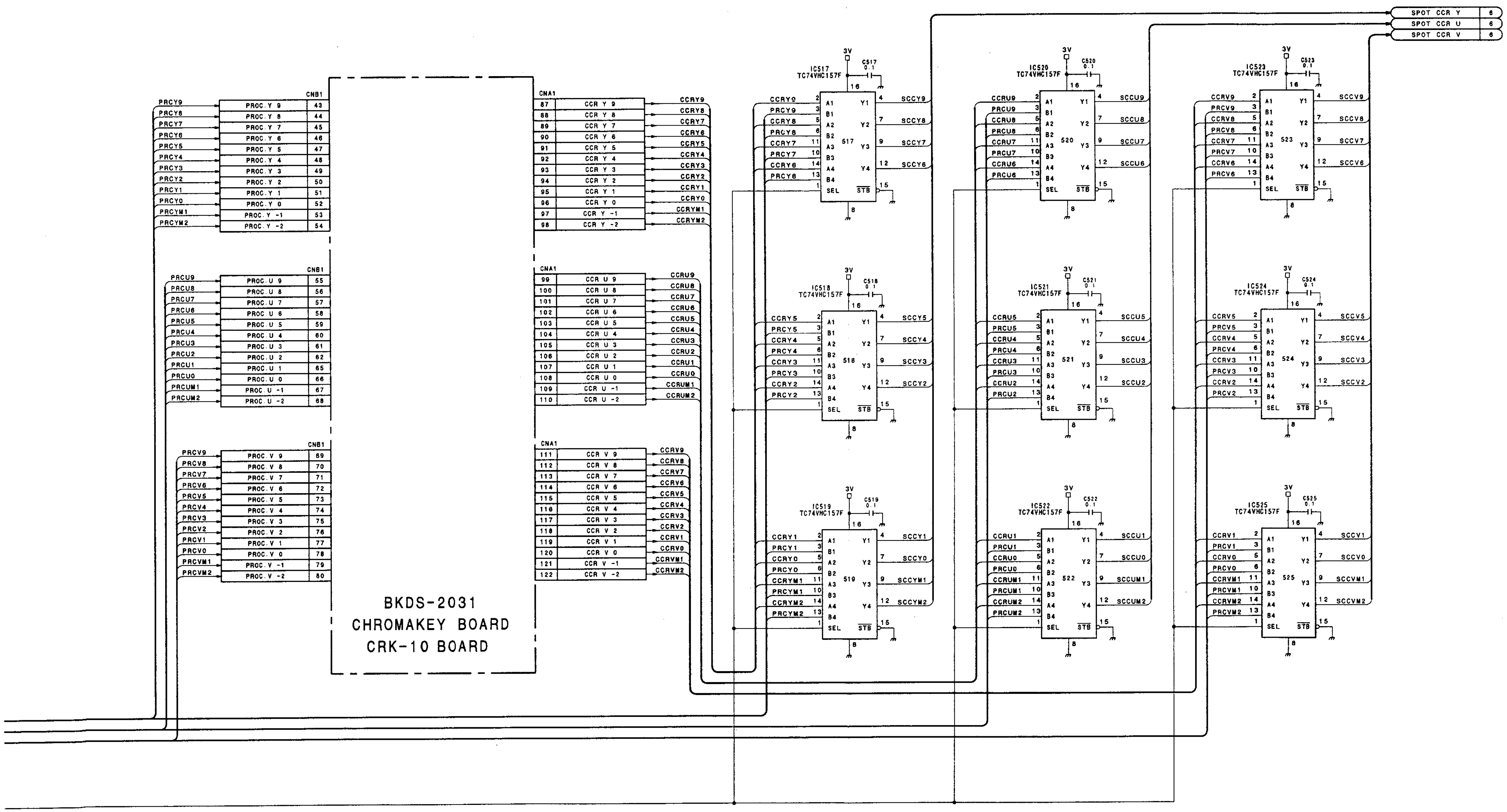

Chromakey Upgrade Board
CRK-11 (5/12)
BKDS-2032
BOARD NO. 1-654-681-11
LOT NO. 407-
FOR DVS-7000
B-¥SJX003-CRK11

CRK-11 (6/12) Chromakey Upgrade Board

BKDS-2032 (SY) : S/N 10001 and Higher

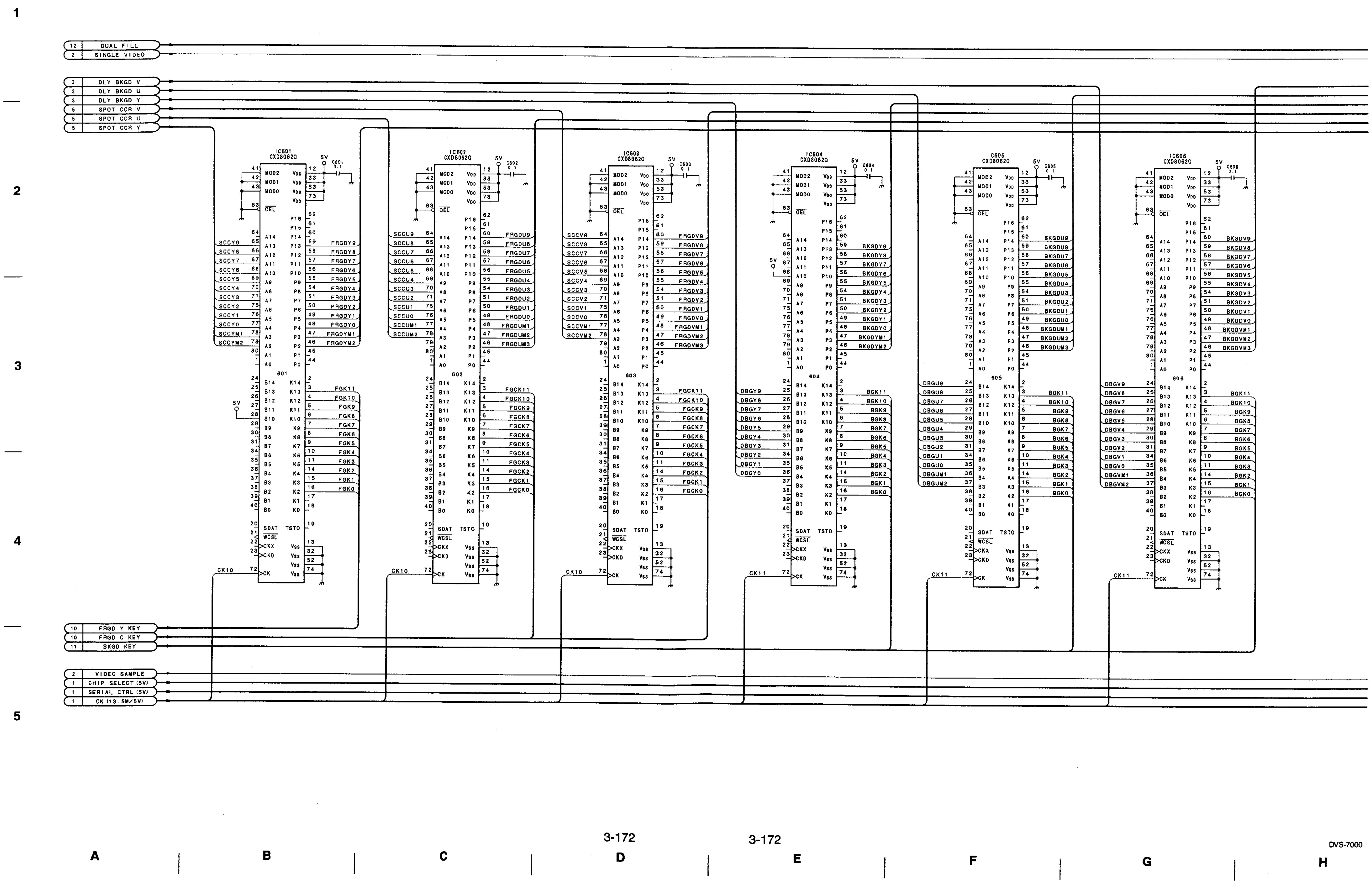

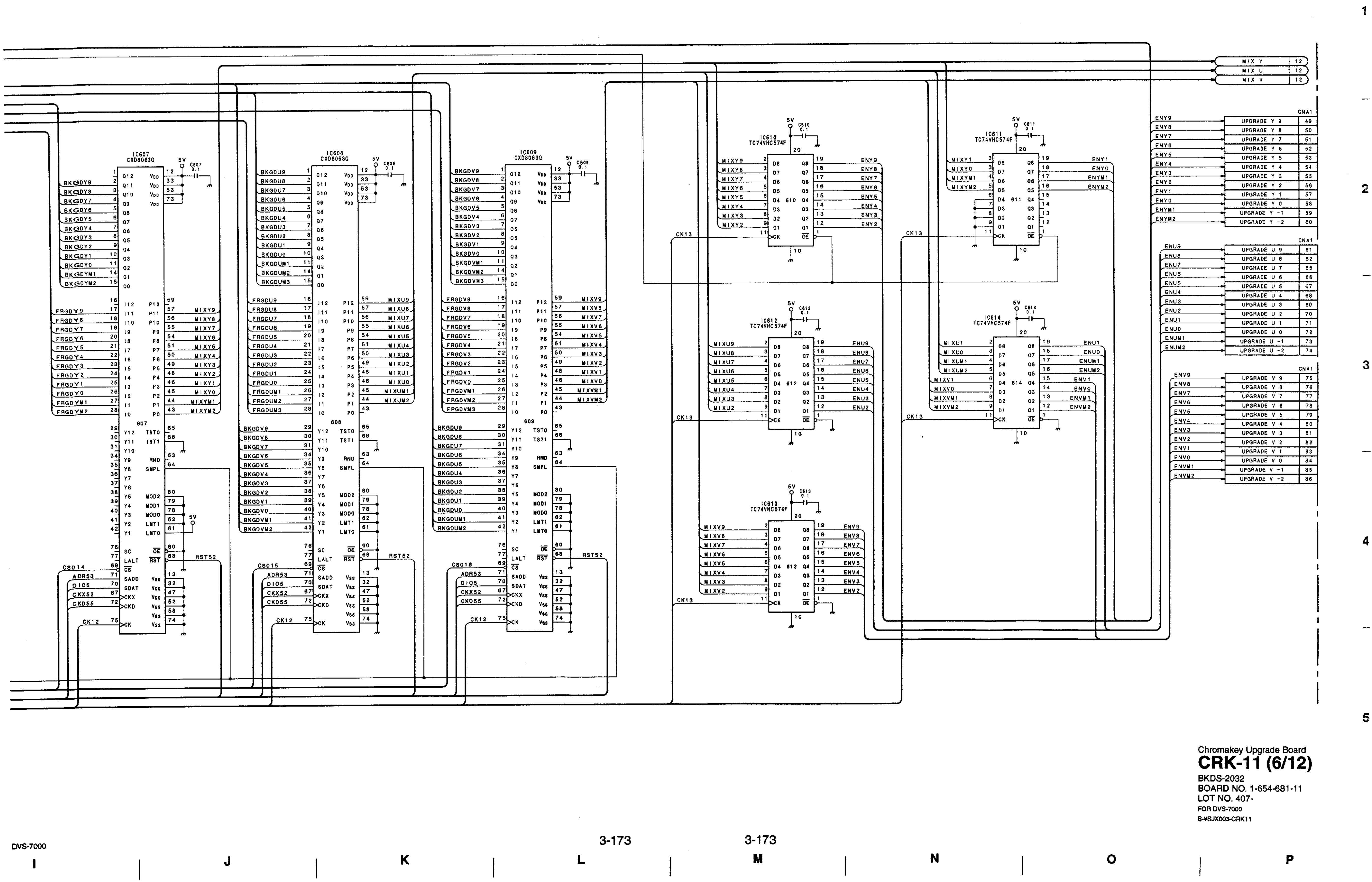

Chromakey Upgrade Board
CRK-11 (6/12)
BKDS-2032
BOARD NO. 1-654-681-11
LOT NO. 407-
FOR DVS-7000
B-¥SJX003-CRK11

BKDS-2032 (SY) : S/N 10001 and Higher

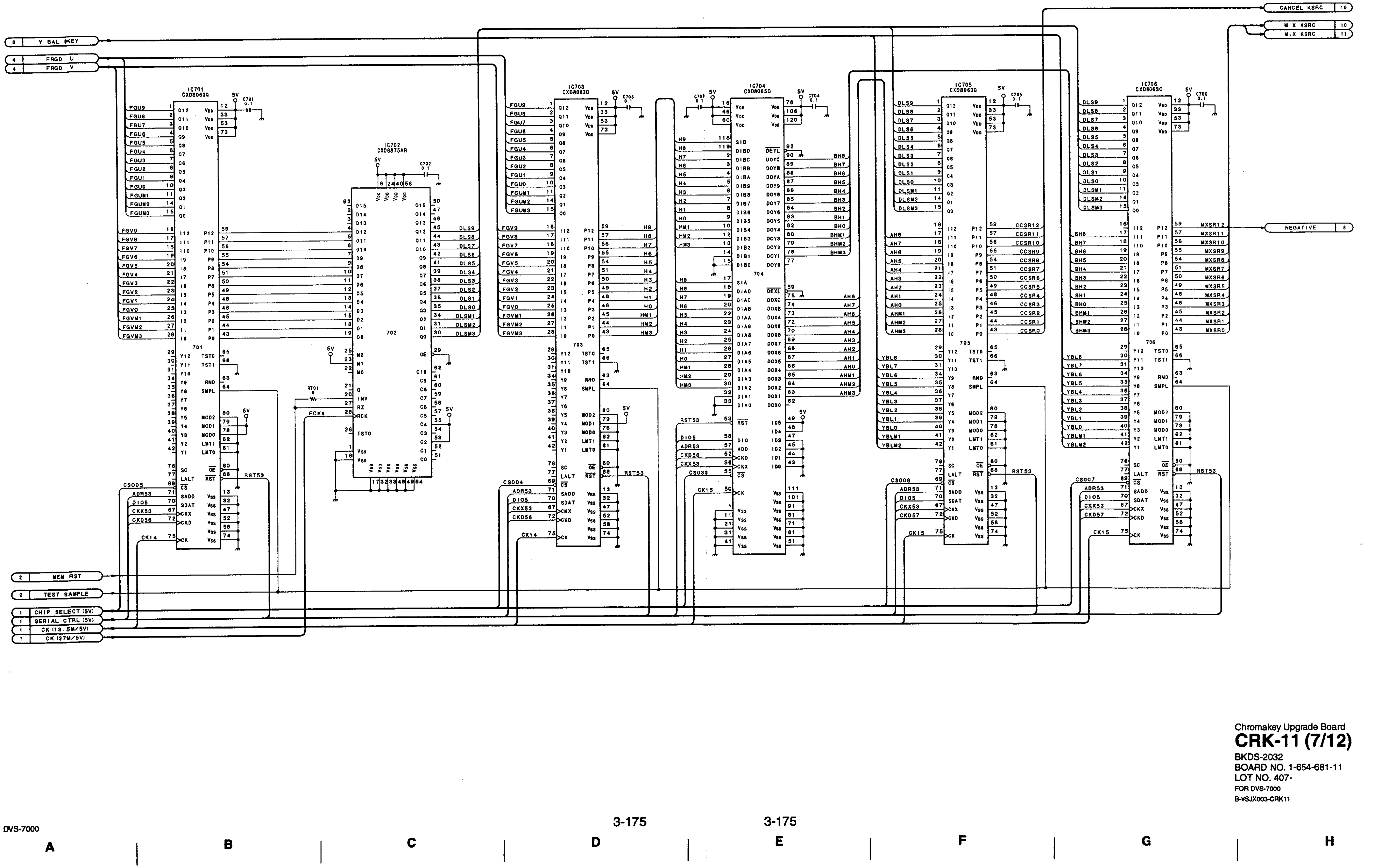

Chromakey Upgrade Board
CRK-11 (7/12)
BKDS-2032
BOARD NO. 1-654-681-11
LOT NO. 407-
FOR DVS-7000
B-¥SJX003-CRK11

CRK-11 (8/12) Chromakey Upgrade Board

BKDS-2032 (SY) : S/N 10001 and Higher

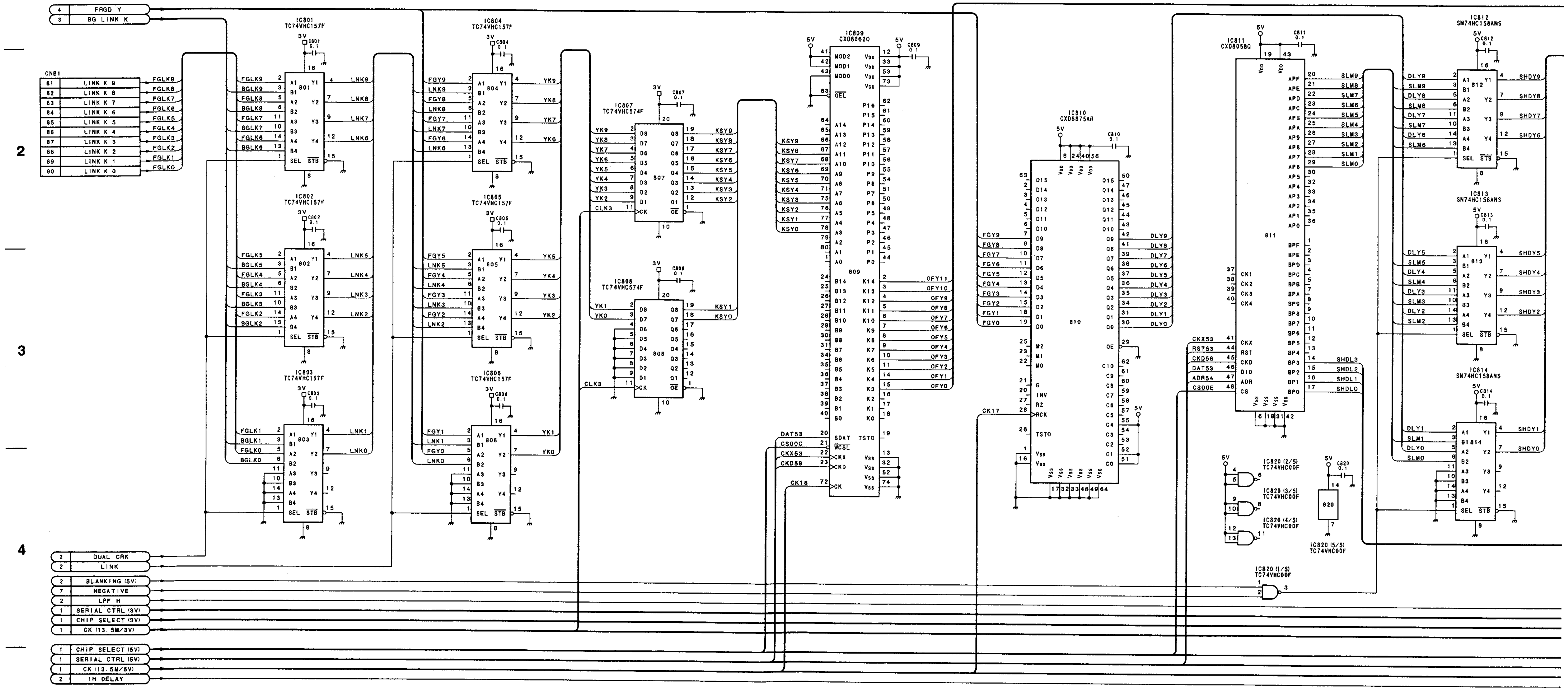

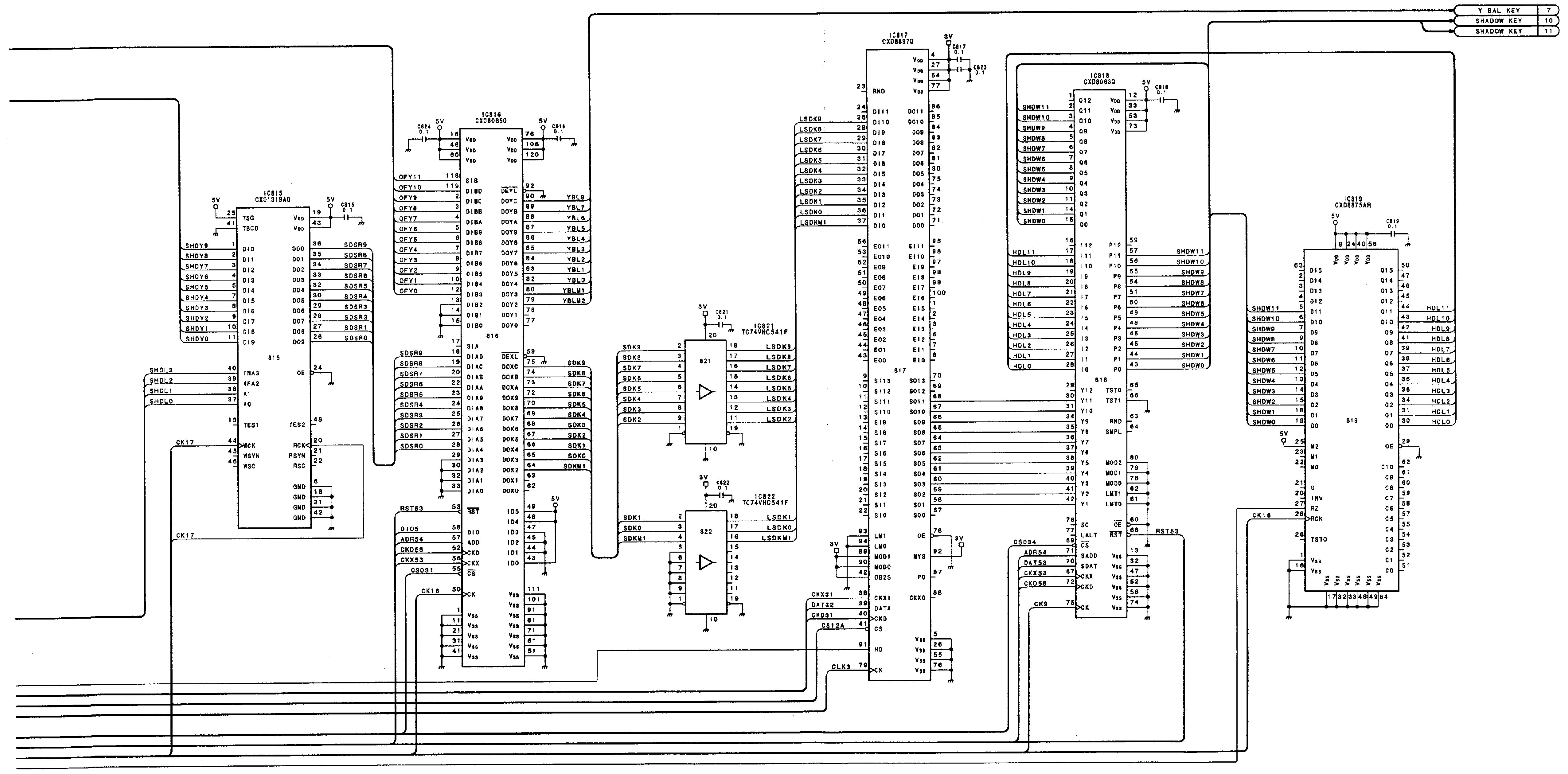

Chromakey Upgrade Board
CRK-11 (8/12)
BKDS-2032
BOARD NO. 1-654-681-11
LOT NO. 407-
FOR DVS-7000
B-¥SJX003-CRK11

BKDS-2032 (SY) : S/N 10001 and Higher

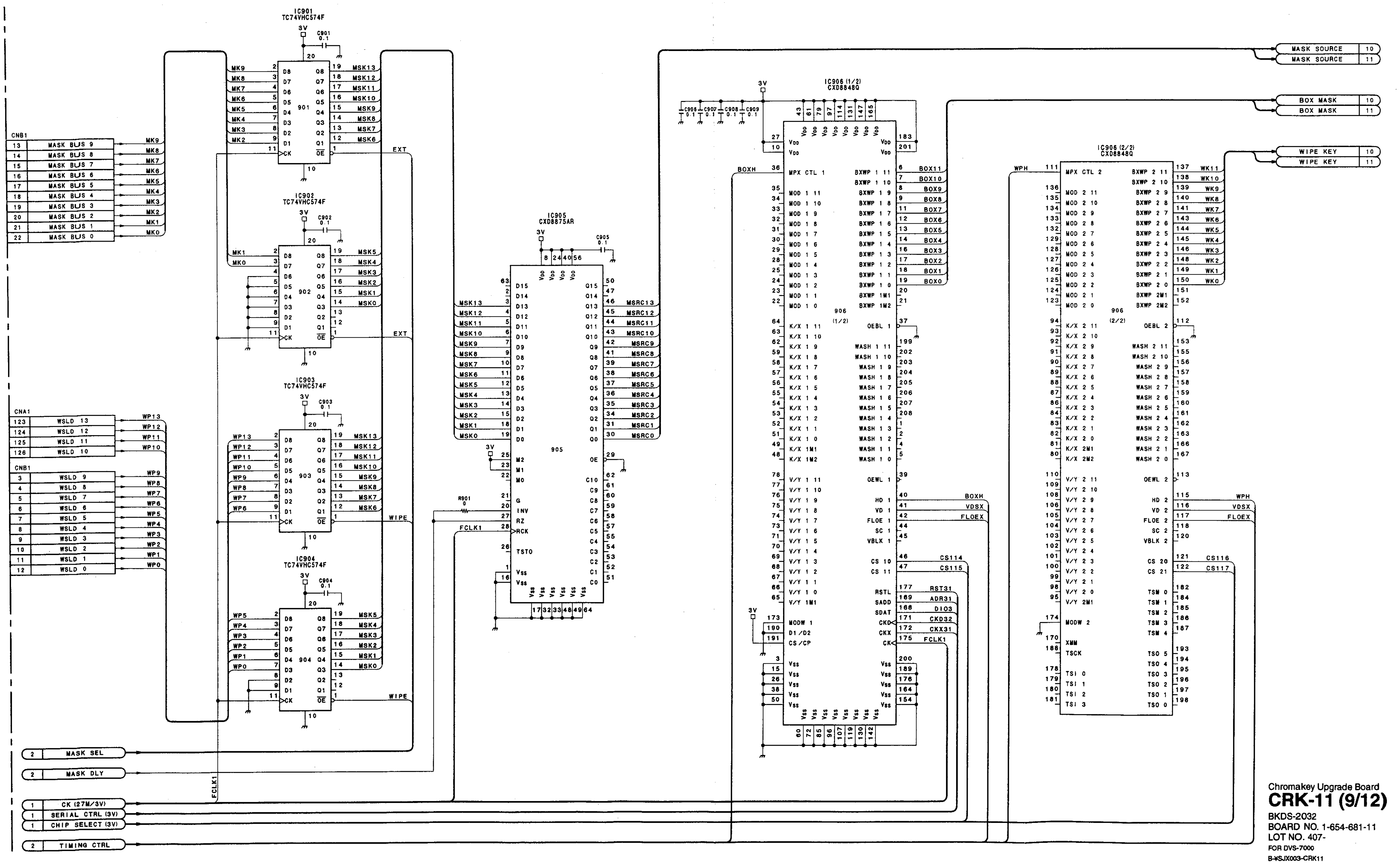

Chromakey Upgrade Board
CRK-11 (9/12)
BKDS-2032
BOARD NO. 1-654-681-11
LOT NO. 407-
FOR DVS-7000
B-¥SJX003-CRK11

BKDS-2032 (SY) : S/N 10001 and Higher

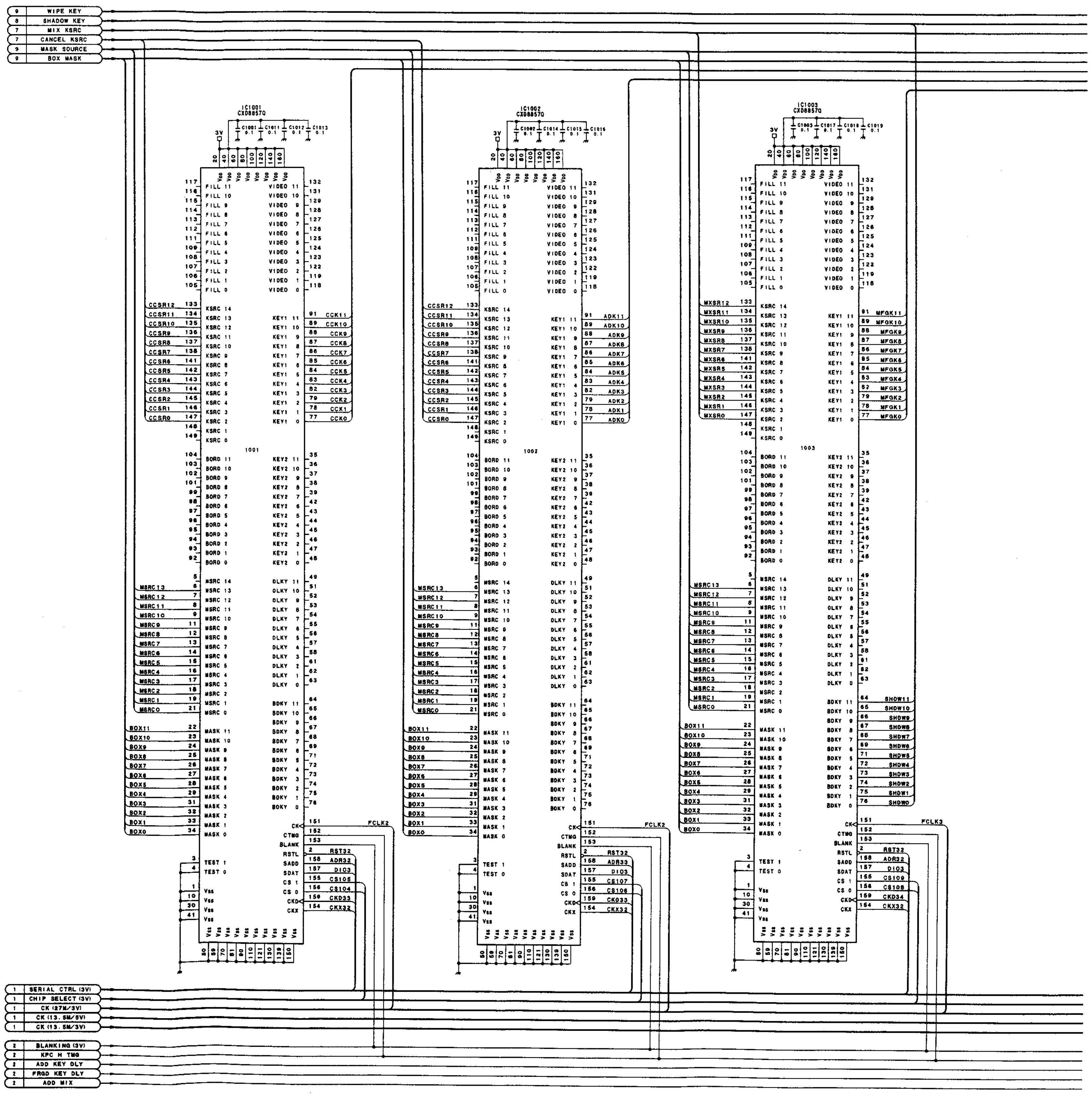

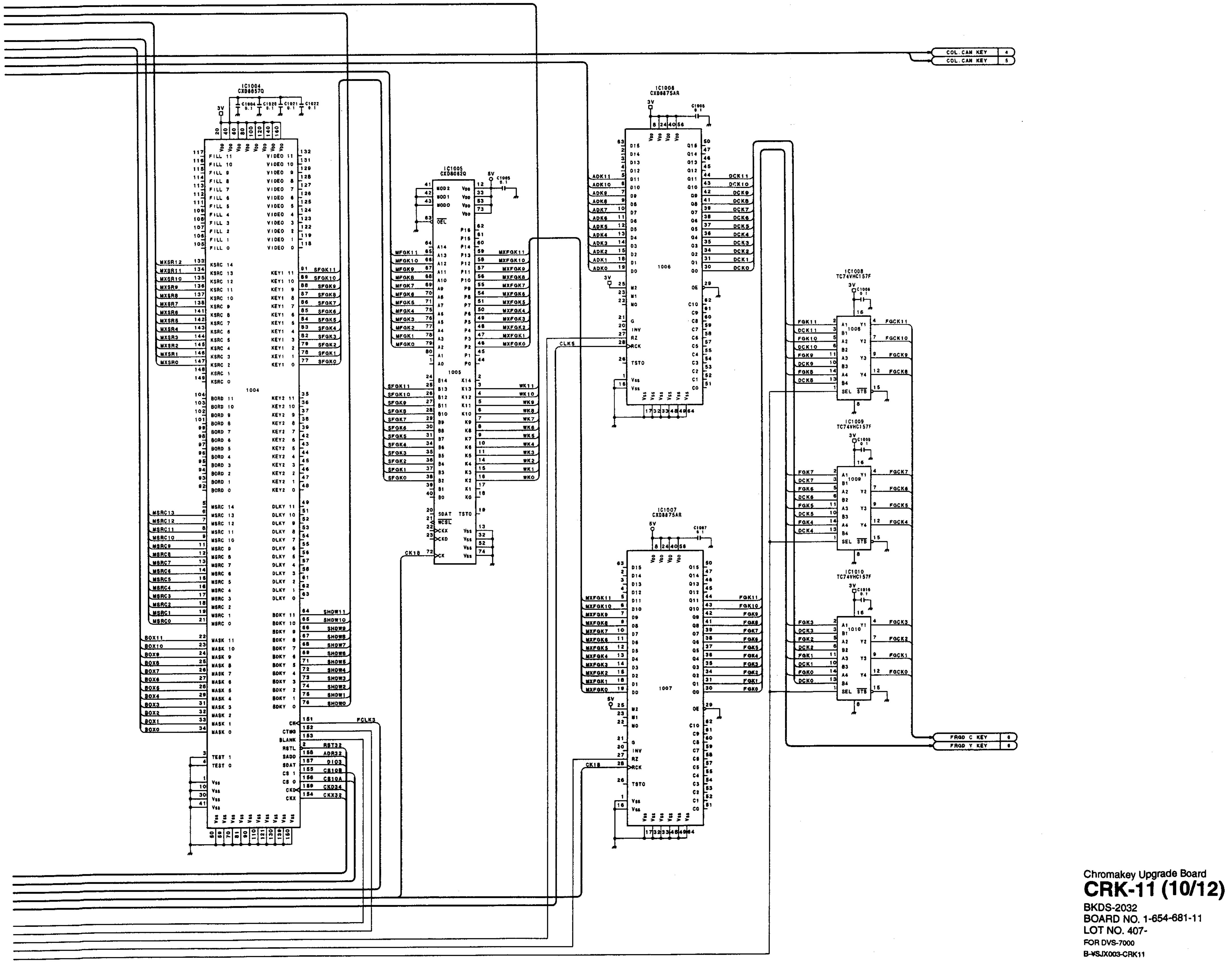

Chromakey Upgrade Board
CRK-11 (10/12)
BKDS-2032
BOARD NO. 1-654-681-11
LOT NO. 407-
FOR DVS-7000
B-¥SJX003-CRK11

I | J | K | L | M | N | O | P

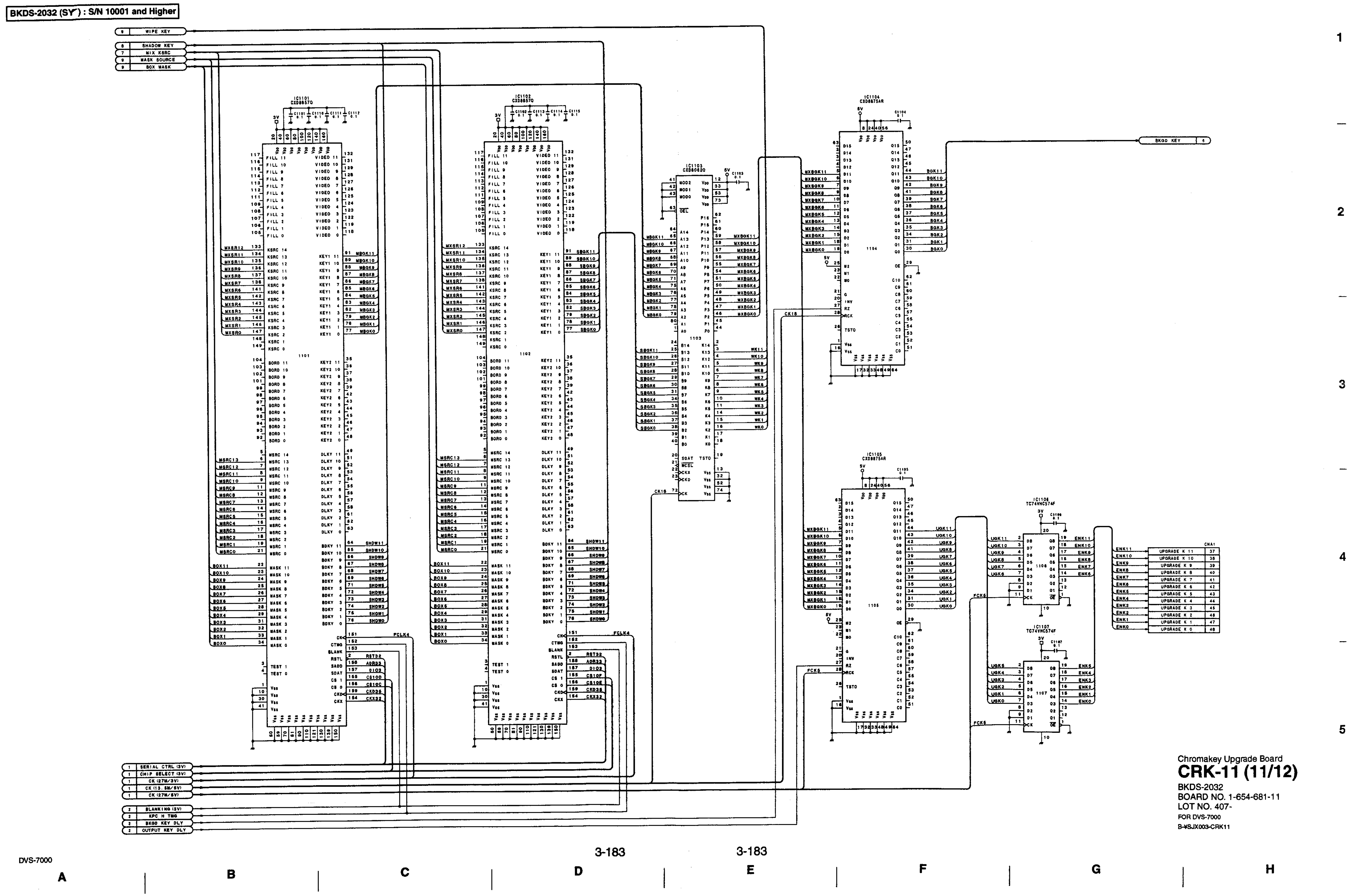

Chromakey Upgrade Board
CRK-11 (11/12)
BKDS-2032
BOARD NO. 1-654-681-11
LOT NO. 407-
FOR DVS-7000
B-¥SJX003-CRK11

BKDS-2032 (SY) : S/N 10001 and Higher

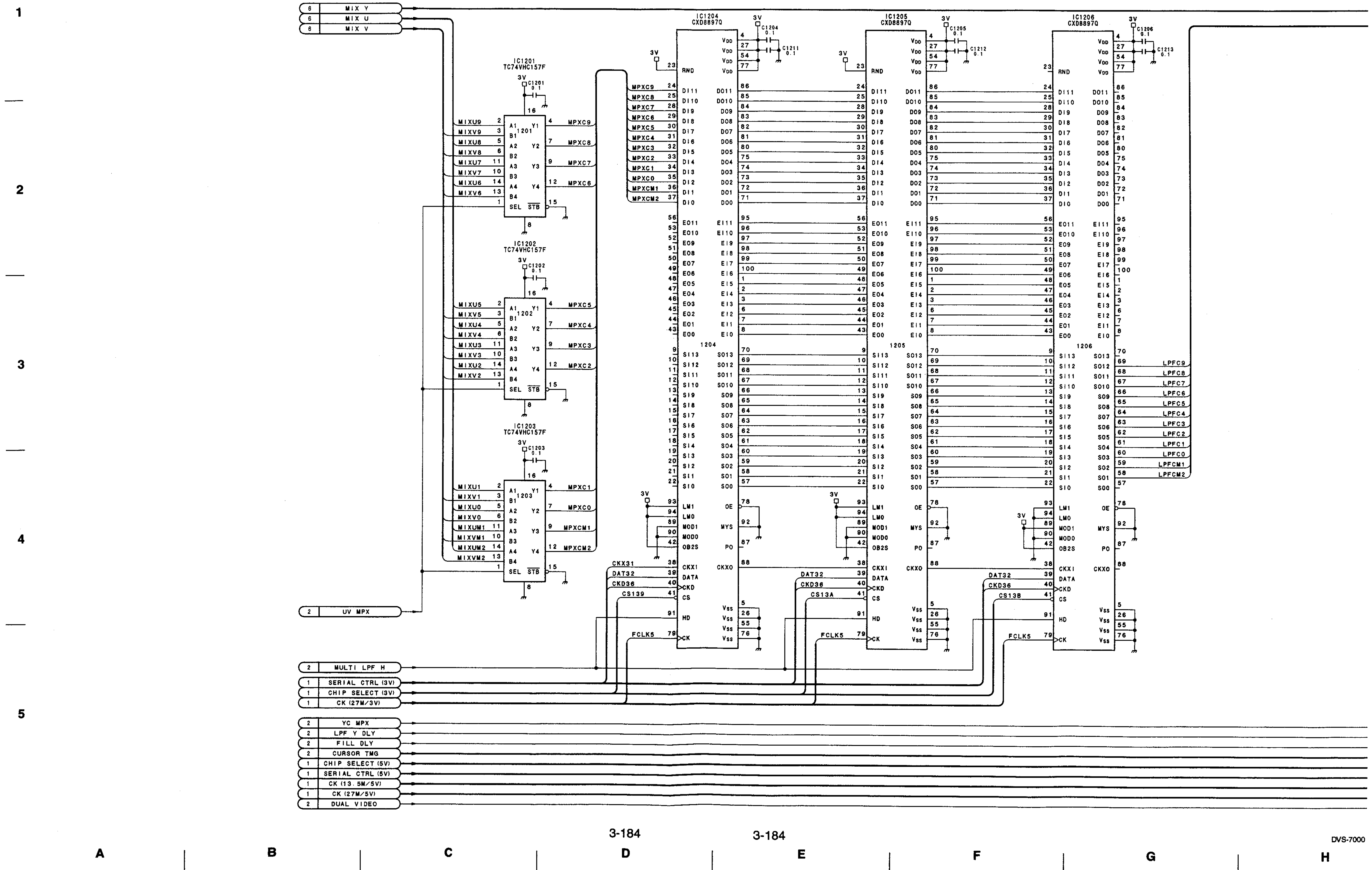

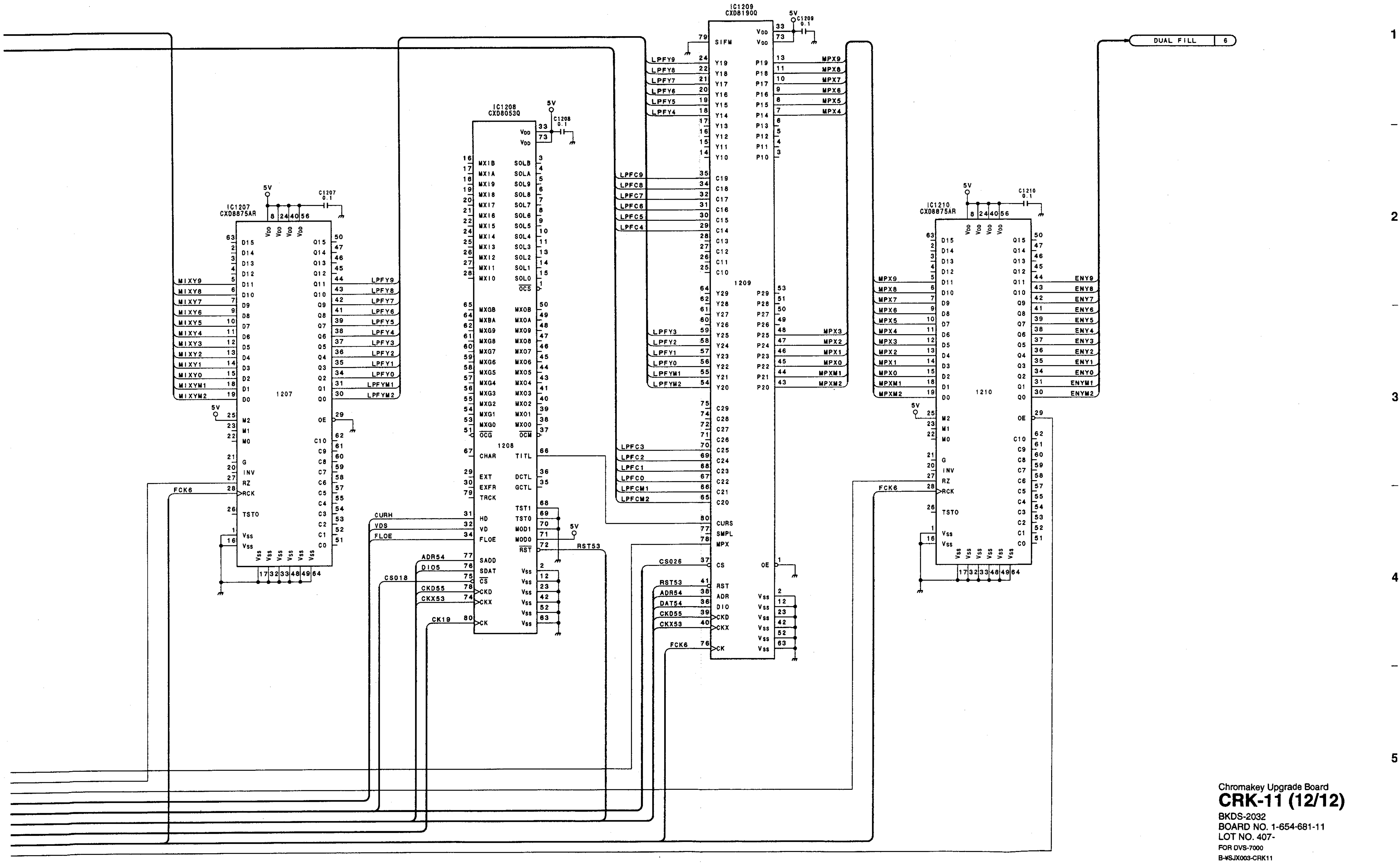

Chromakey Upgrade Board
CRK-11 (12/12)
BKDS-2032
BOARD NO. 1-654-681-11
LOT NO. 407-
FOR DVS-7000
B-¥SJX003-CRK11

BKDS-7161 (SY) : S/N 10001 and Higher

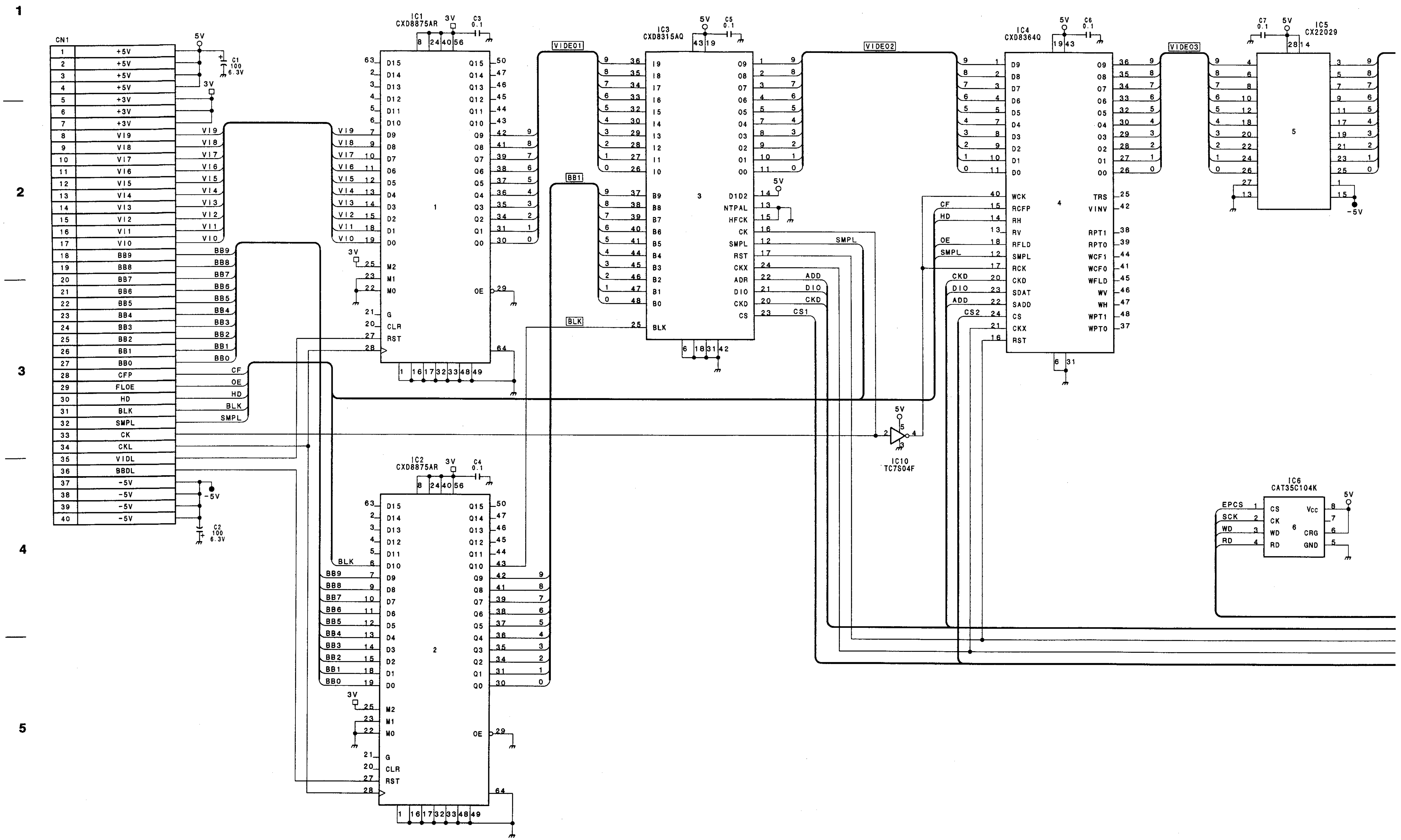

A | B | C | D | E | F | G | H

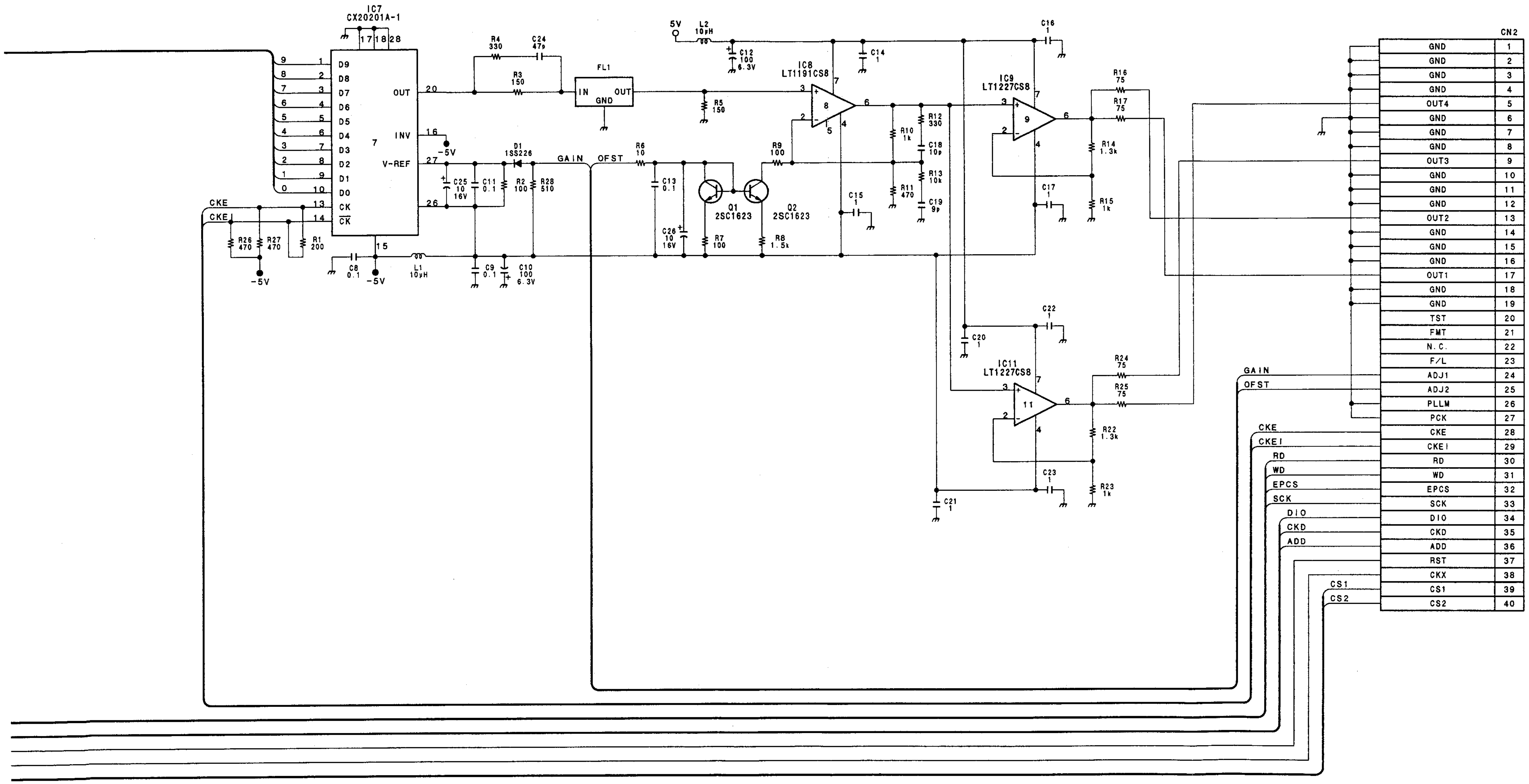

Analog Composite Output Board
DA-94
BKDS-7161
BOARD NO. 1-658-407-11
LOT NO. 506-
FOR DVS-7000/DMK-7000
B-¥SJX050-DA94

BKDS-7430 (SY) : S/N 10001 and Higher

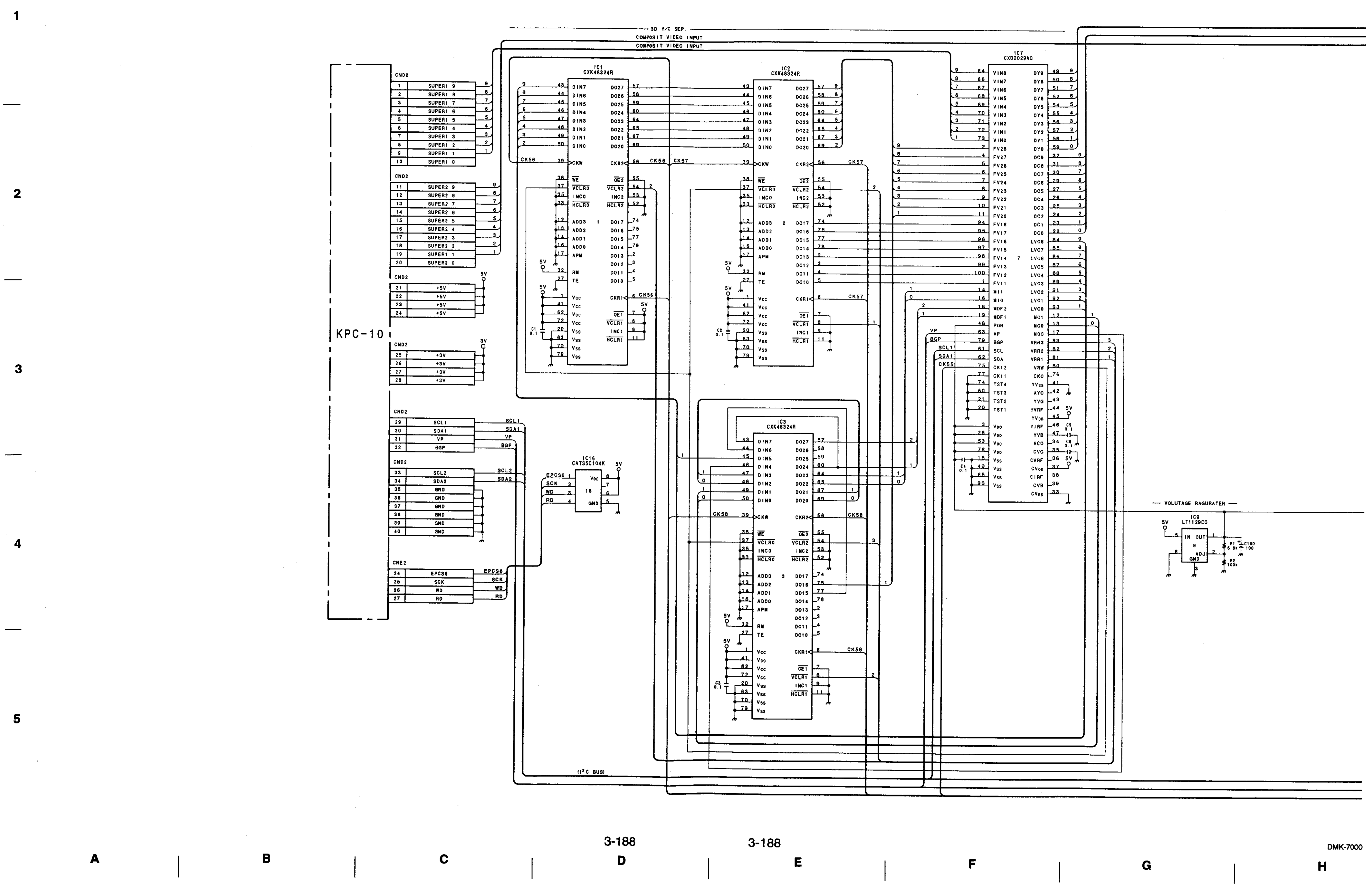

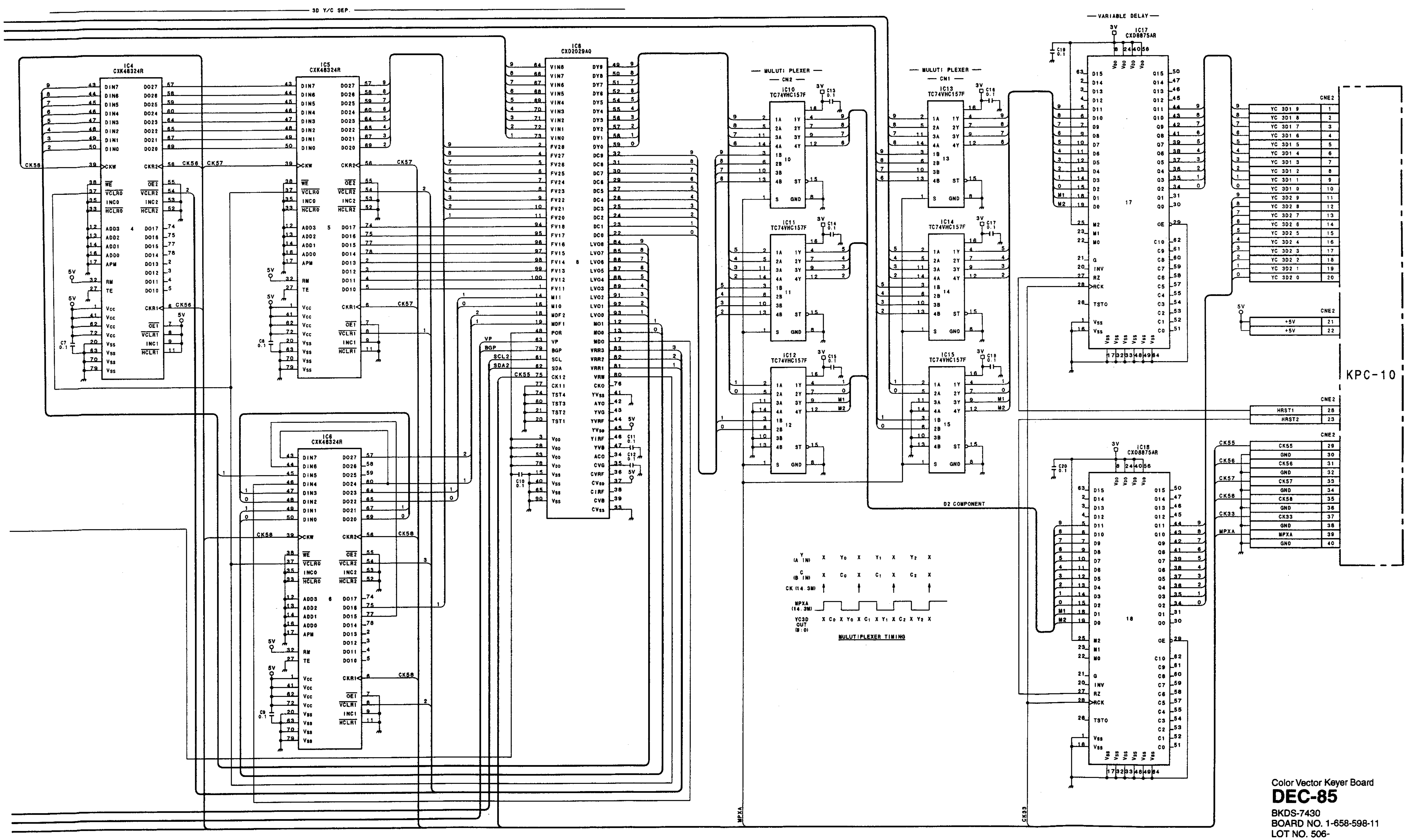

1
2
3
4
5

Color Vector Keyer Board
DEC-85
BKDS-7430
BOARD NO. 1-658-598-11
LOT NO. 506-
FOR DMK-7000
B-¥SJX054-DEC85

BKDS-7102 (SY) : S/N 10251 and Higher

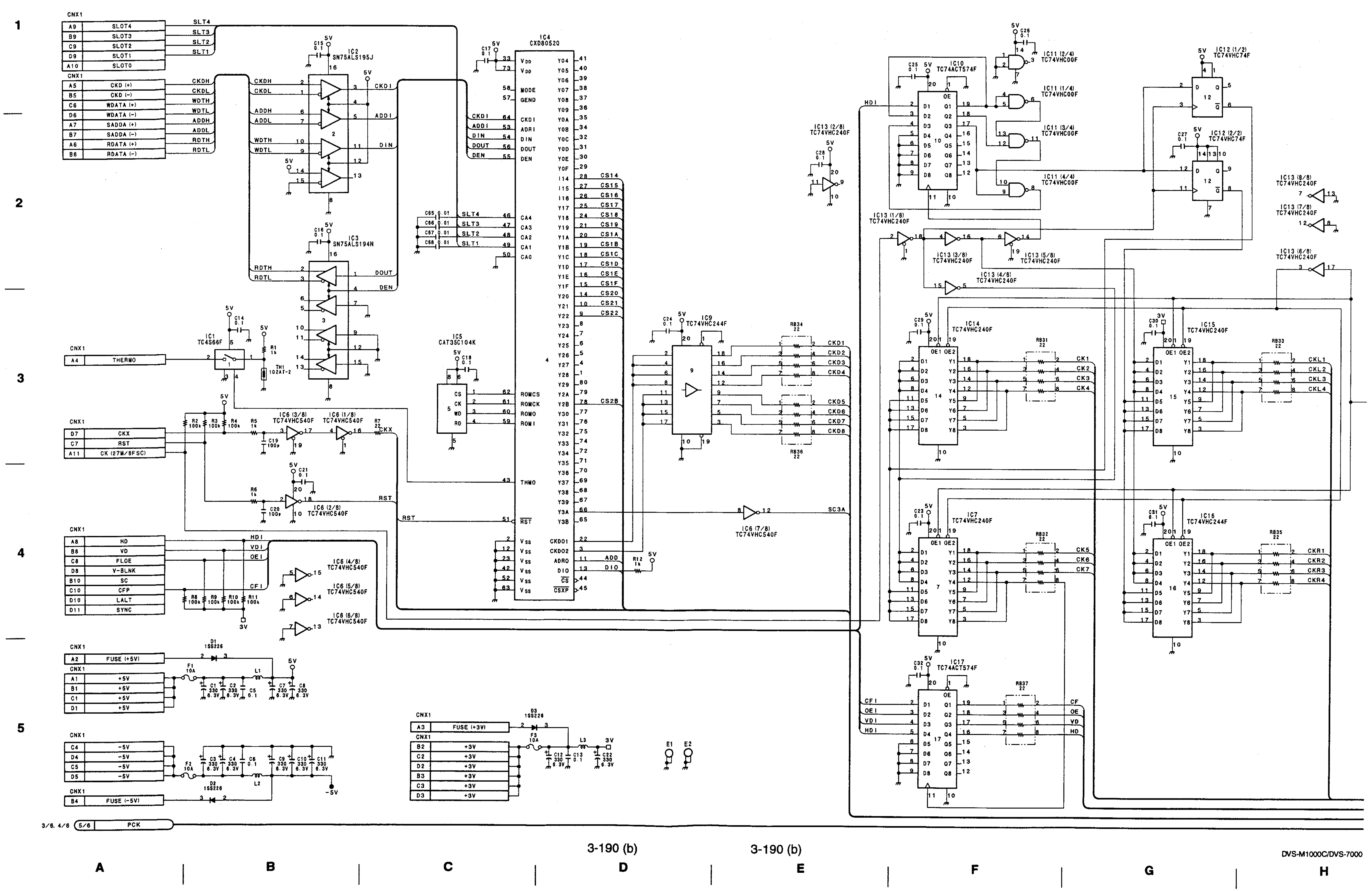

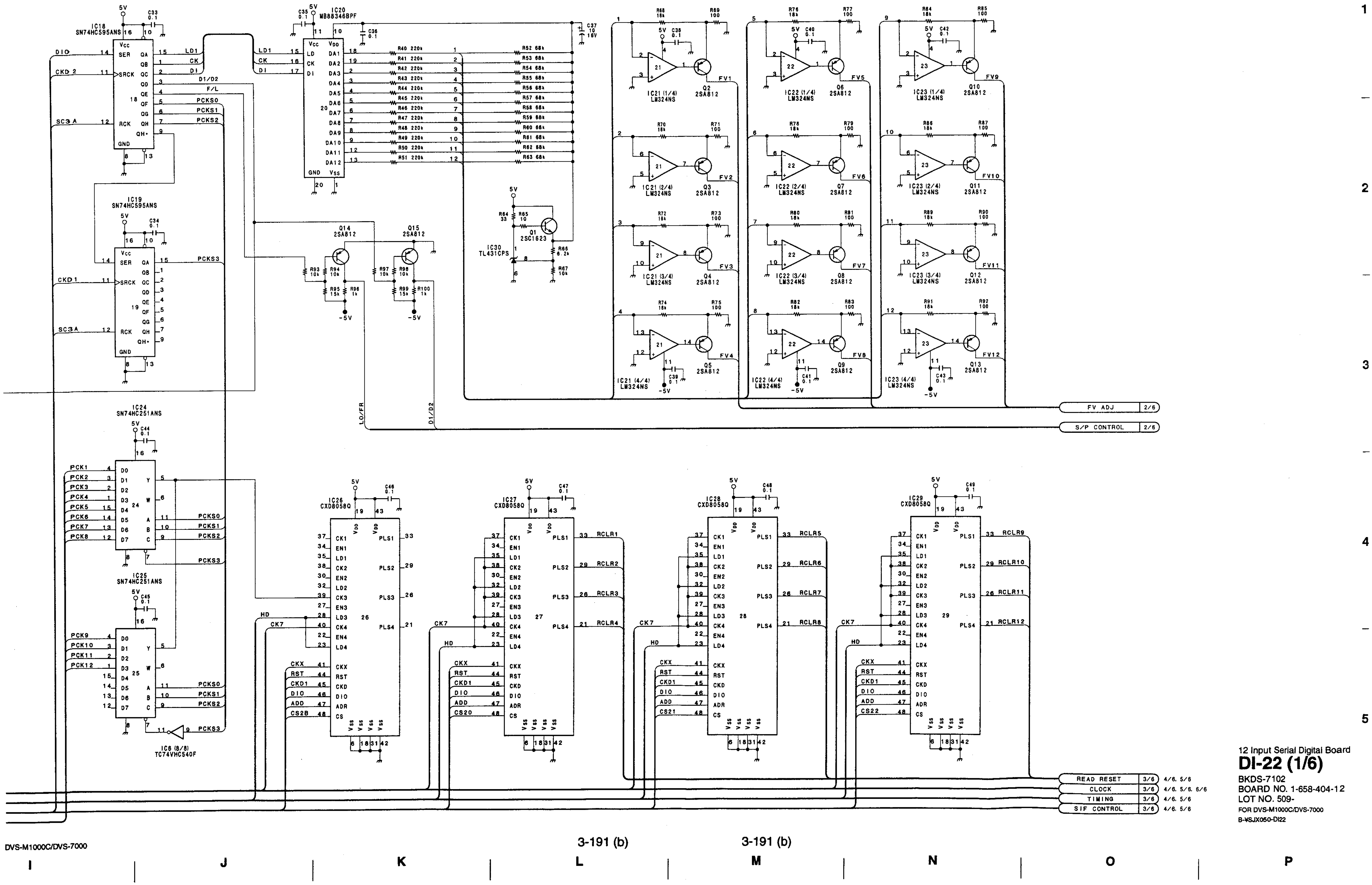

12 Input Serial Digital Board
DI-22 (1/6)
BKDS-7102
BOARD NO. 1-658-404-12
LOT NO. 509-
FOR DVS-M1000C/DVS-7000
B-¥SJX050-DI22

BKDS-7102 (SY) : S/N 10251 and Higher

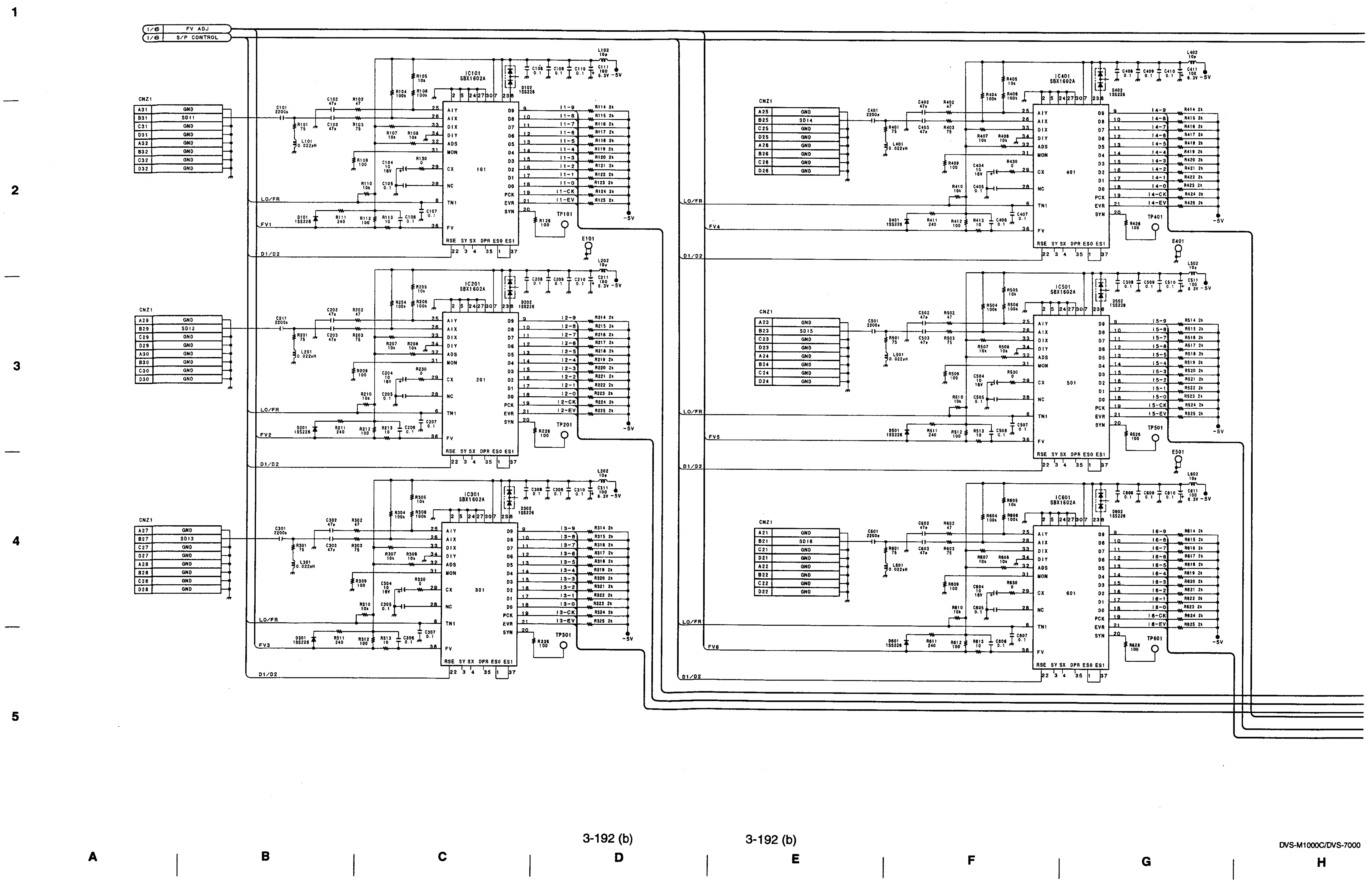

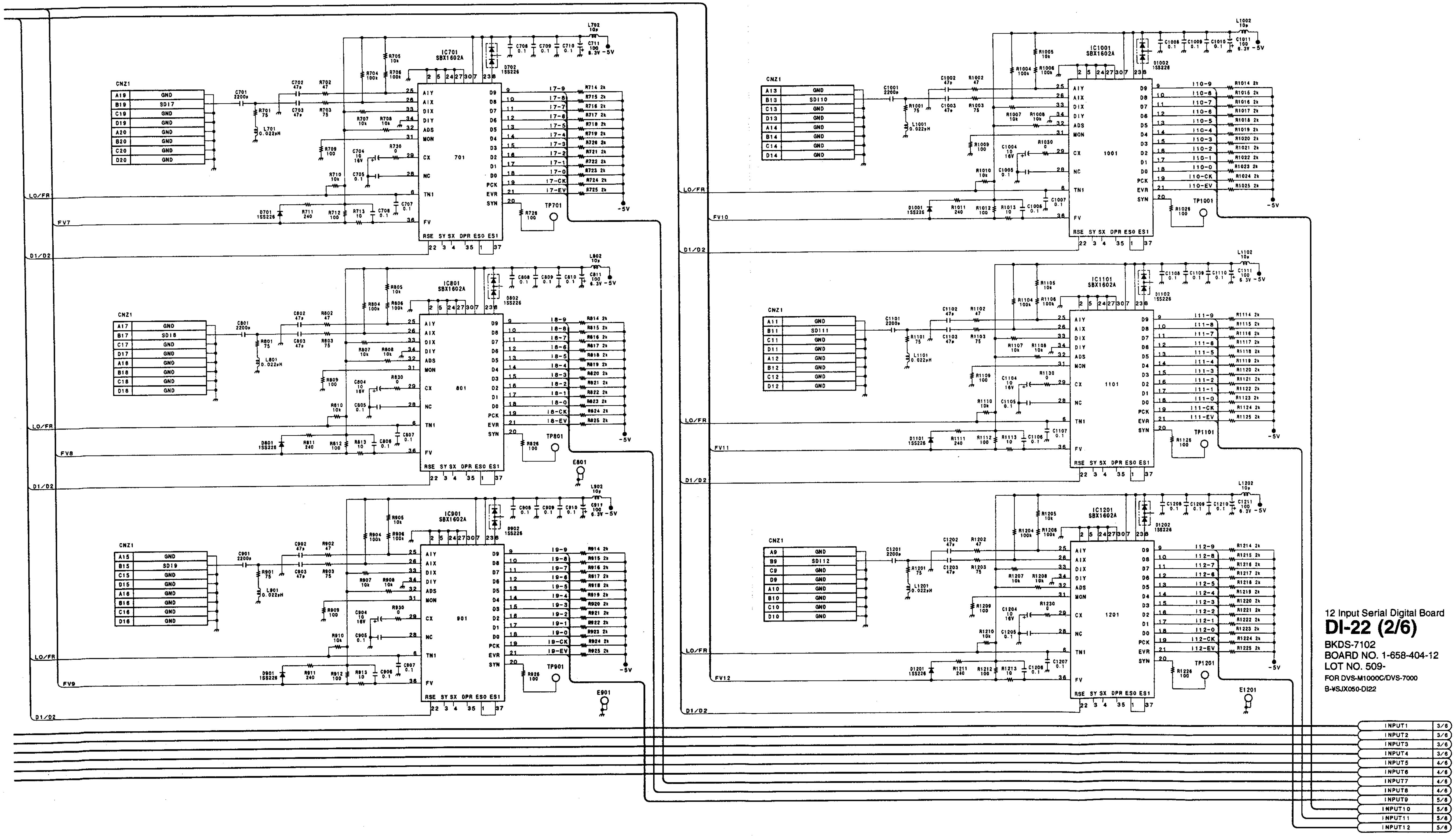

12 Input Serial Digital Board
DI-22 (2/6)
BKDS-7102
BOARD NO. 1-658-404-12
LOT NO. 509-
FOR DVS-M1000C/DVS-7000
B-¥SJX050-DI22

BKDS-7102 (SY) : S/N 10251 and Higher

1 2 3 4 5

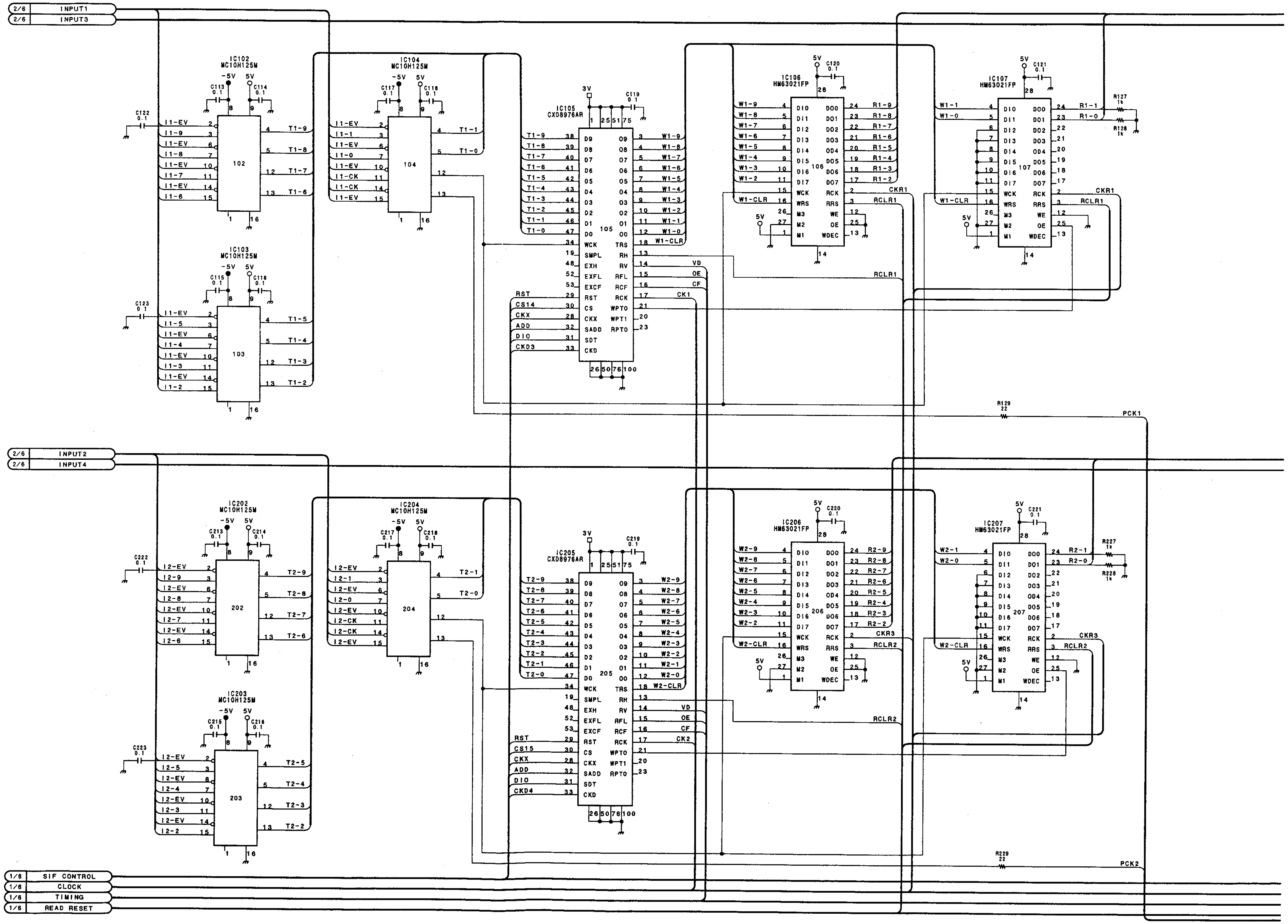

A B C D E F G H

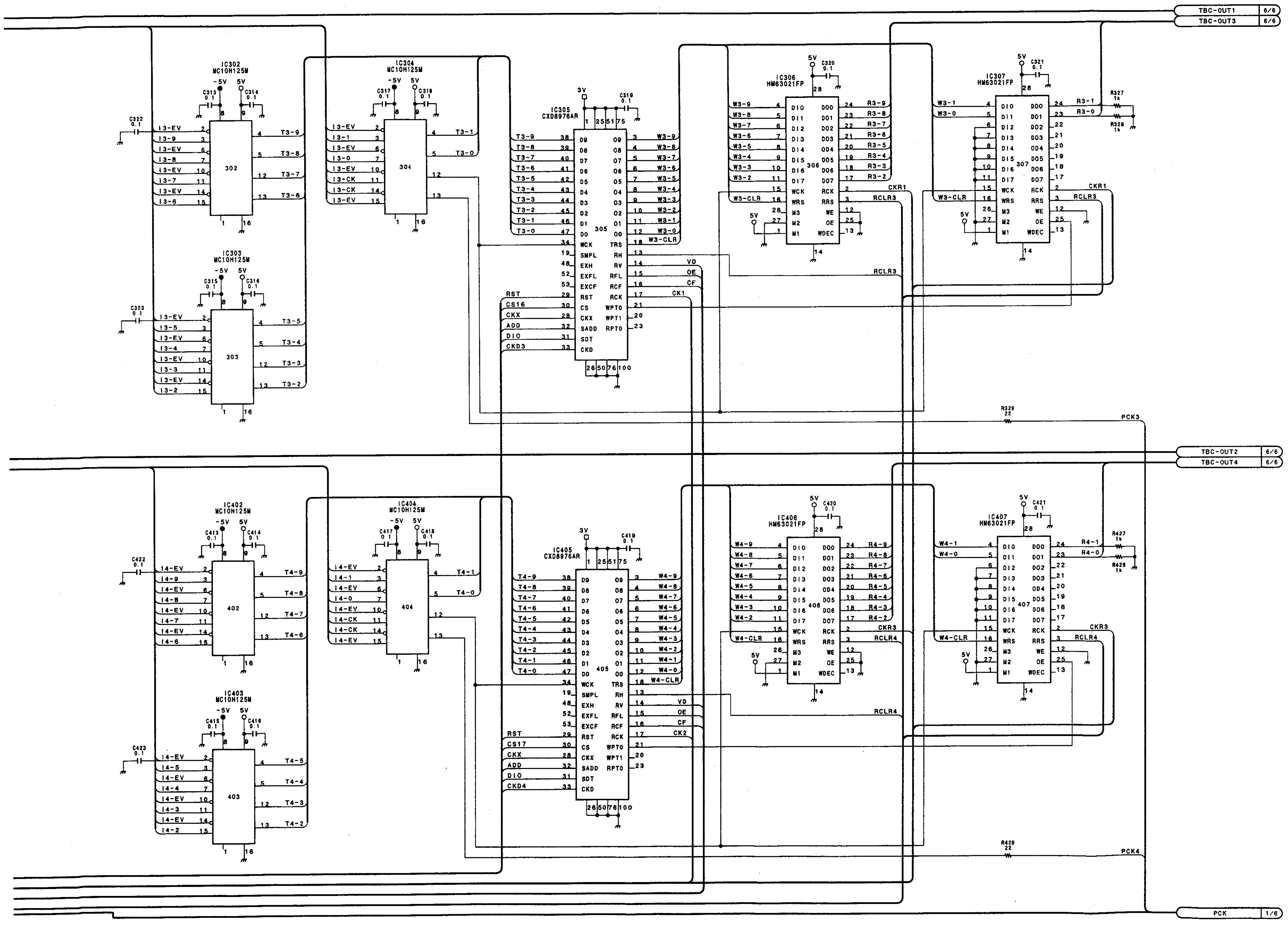

12 Input Serial Digital Board
DI-22 (3/6)
BKDS-7102
BOARD NO. 1-658-404-12
LOT NO. 509-
FOR DVS-M1000C/DVS-7000
B-¥SJX050-DI22

BKDS-7102 (SY) : S/N 10251 and Higher

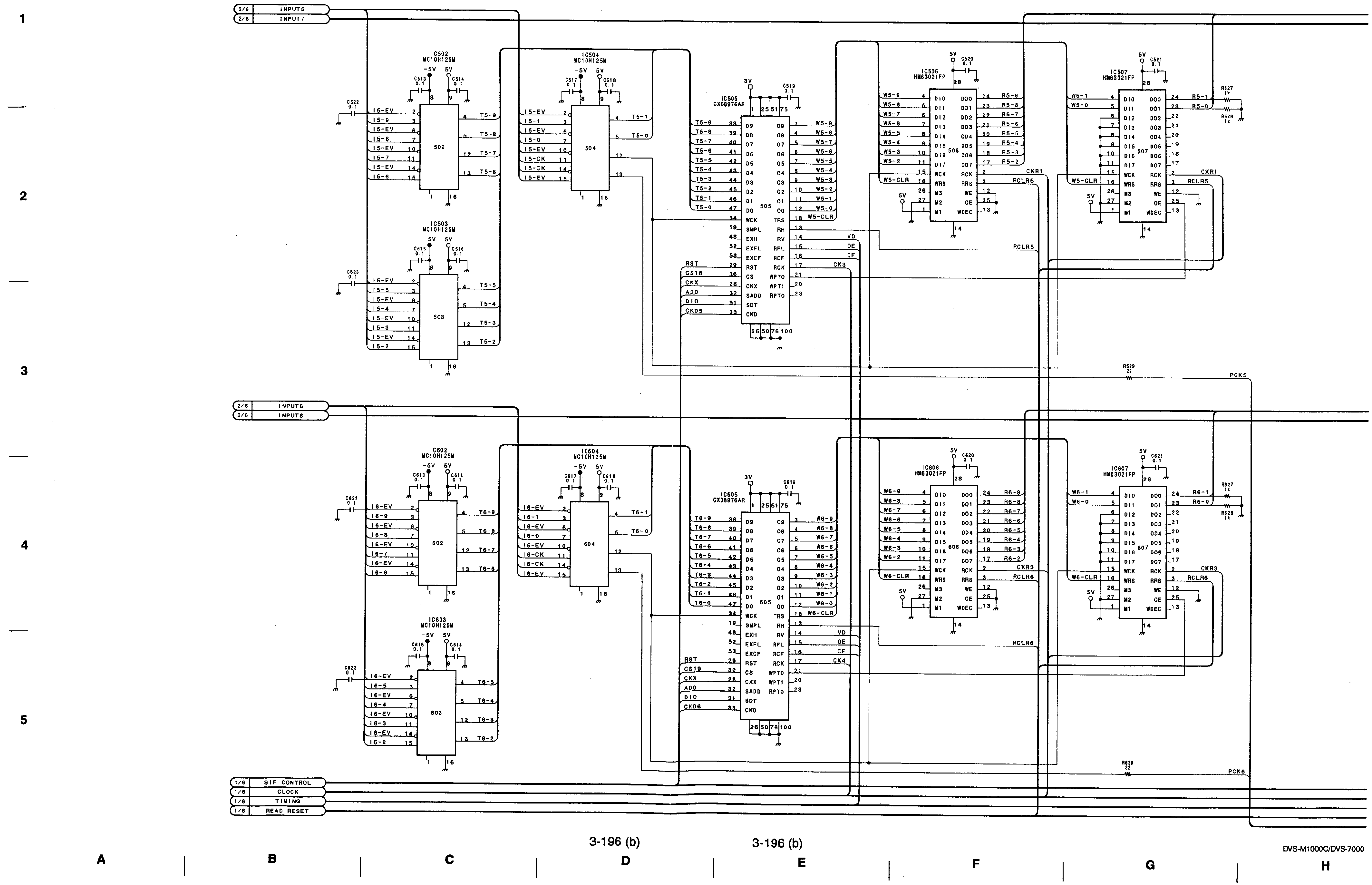

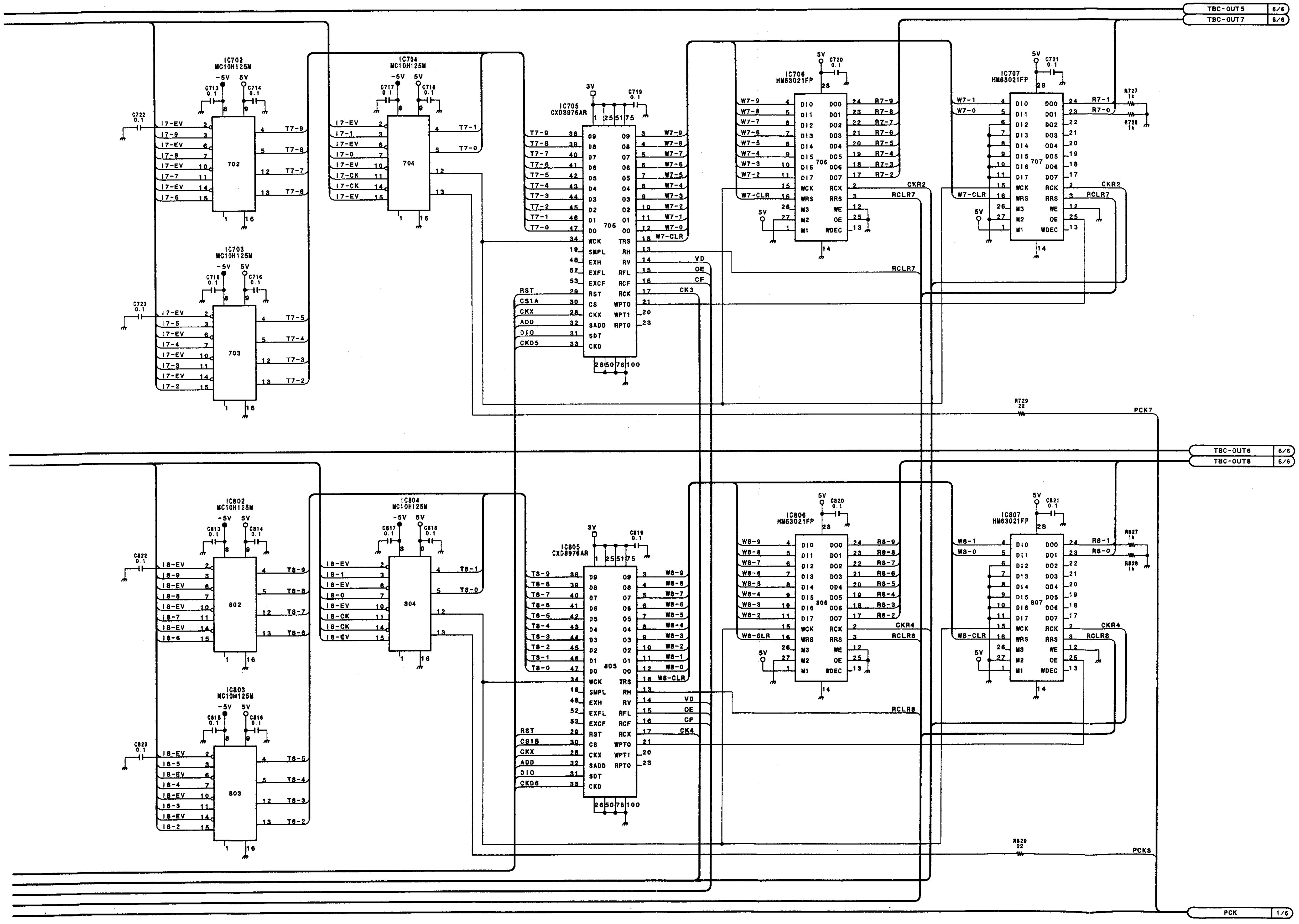

12 Input Serial Digital Board
DI-22 (4/6)
BKDS-7102
BOARD NO. 1-658-404-12
LOT NO. 509-
FOR DVS-M1000C/DVS-7000
B-¥SJX050-DI22

I J K L M N O P

BKDS-7102 (SY) : S/N 10251 and Higher

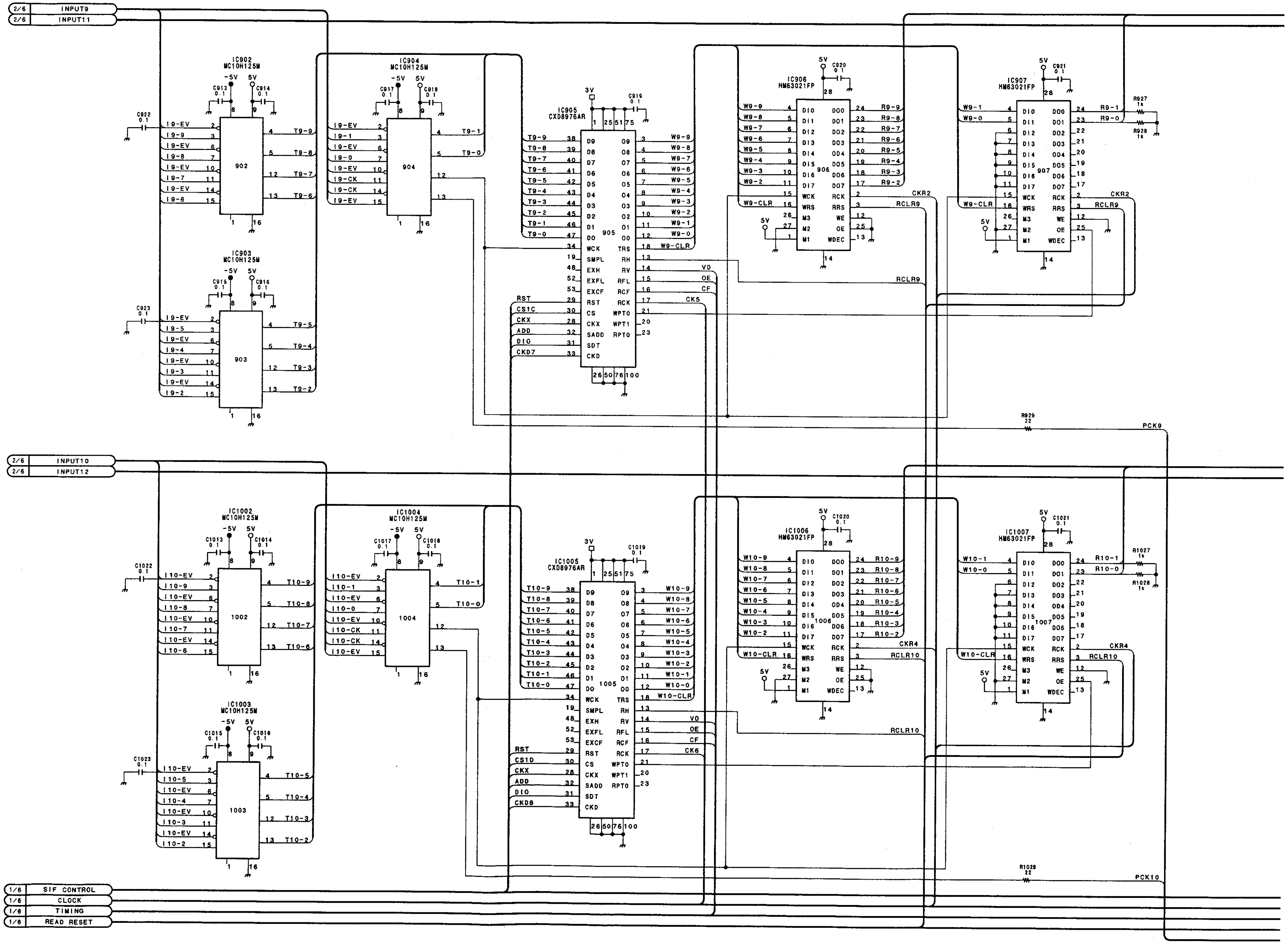

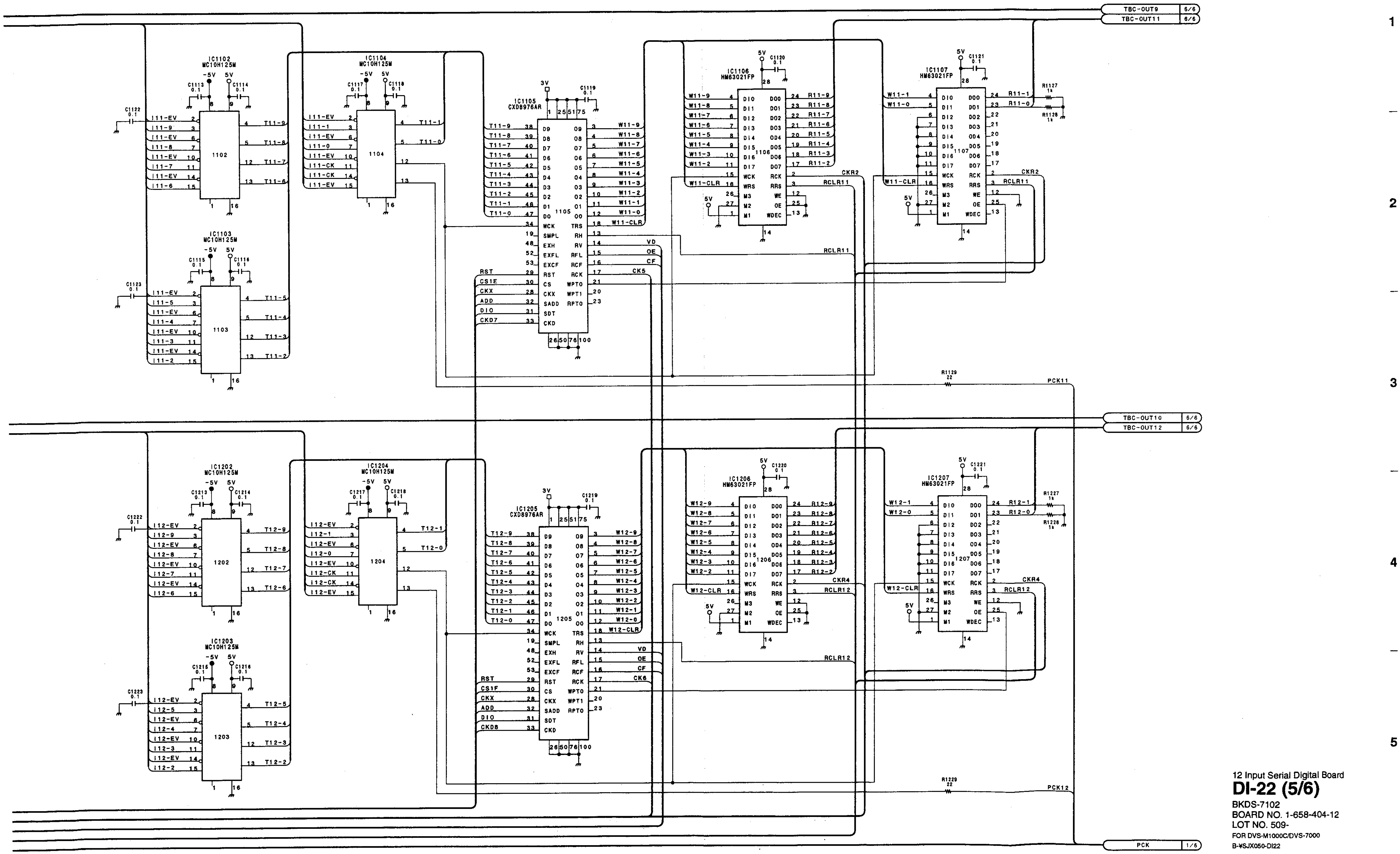

12 Input Serial Digital Board
DI-22 (5/6)
BKDS-7102
BOARD NO. 1-658-404-12
LOT NO. 509-
FOR DVS-M1000C/DVS-7000
B-¥SJX050-DI22

I J K L M N O P

BKDS-7102 (SY) : S/N 10251 and Higher

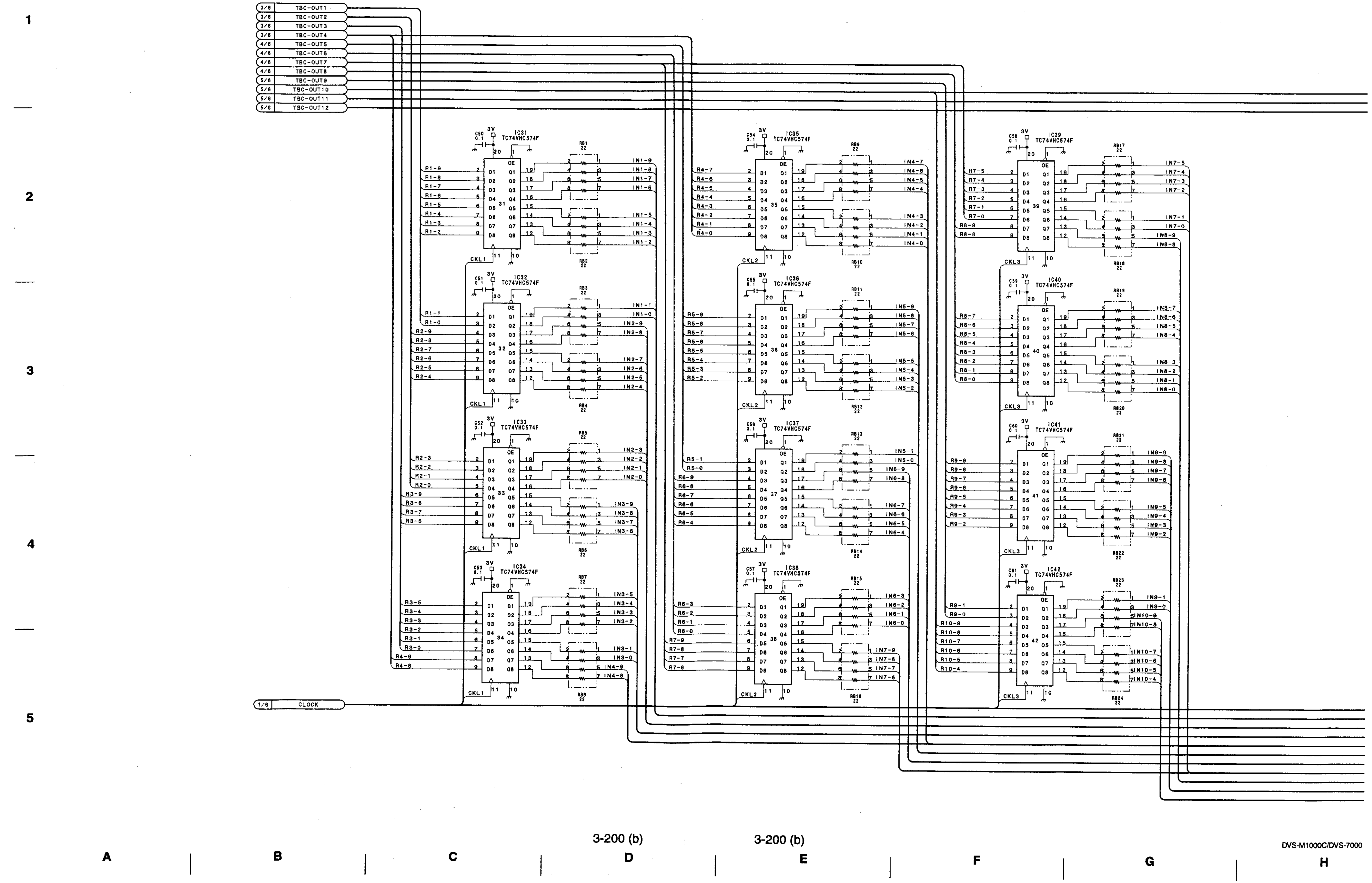

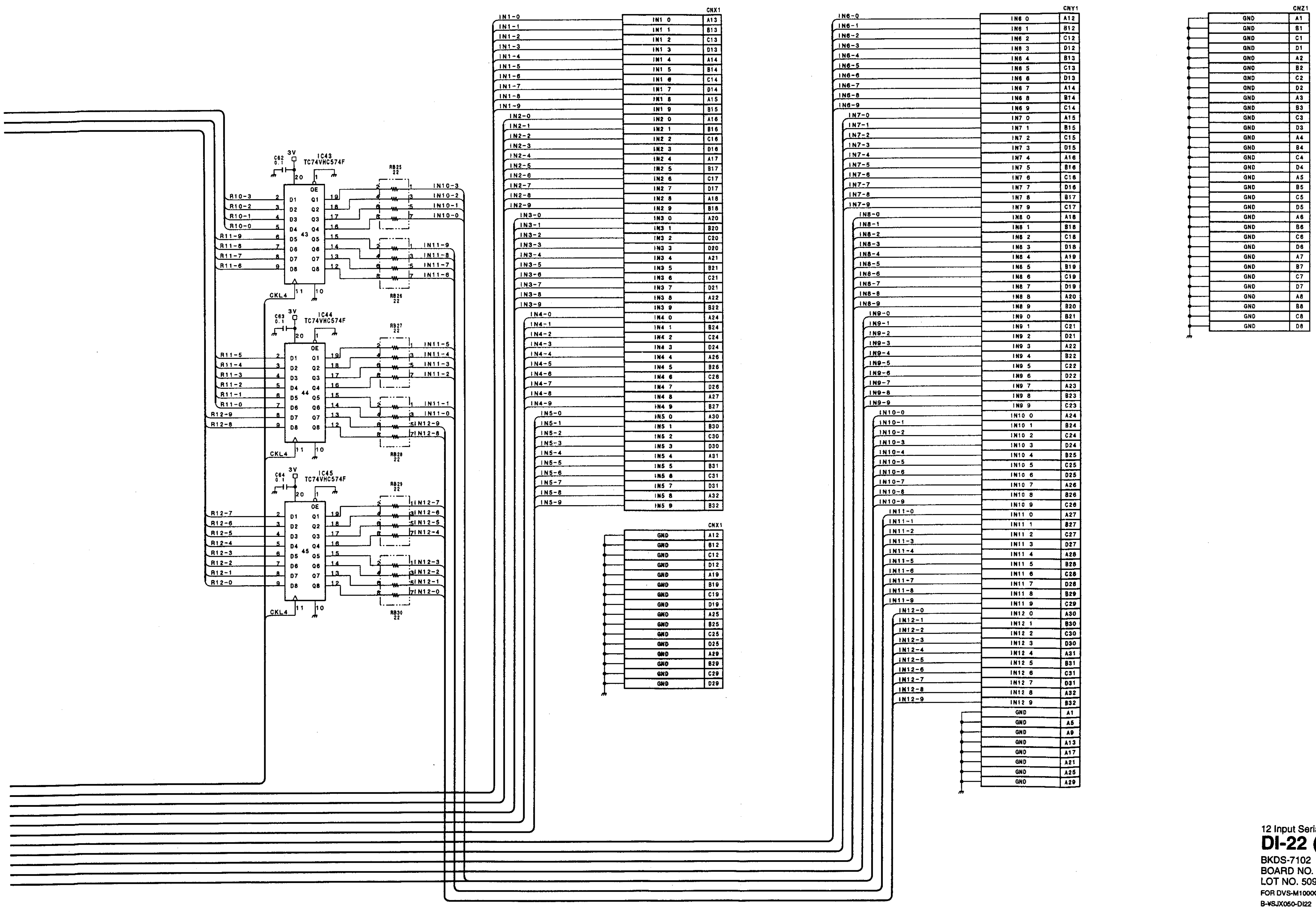

12 Input Serial Digital Board
DI-22 (6/6)
BKDS-7102
BOARD NO. 1-658-404-12
LOT NO. 509-
FOR DVS-M1000C/DVS-7000
B-¥SJX050-DI22

BKDS-7102 (SY) : S/N 10001 through 10250

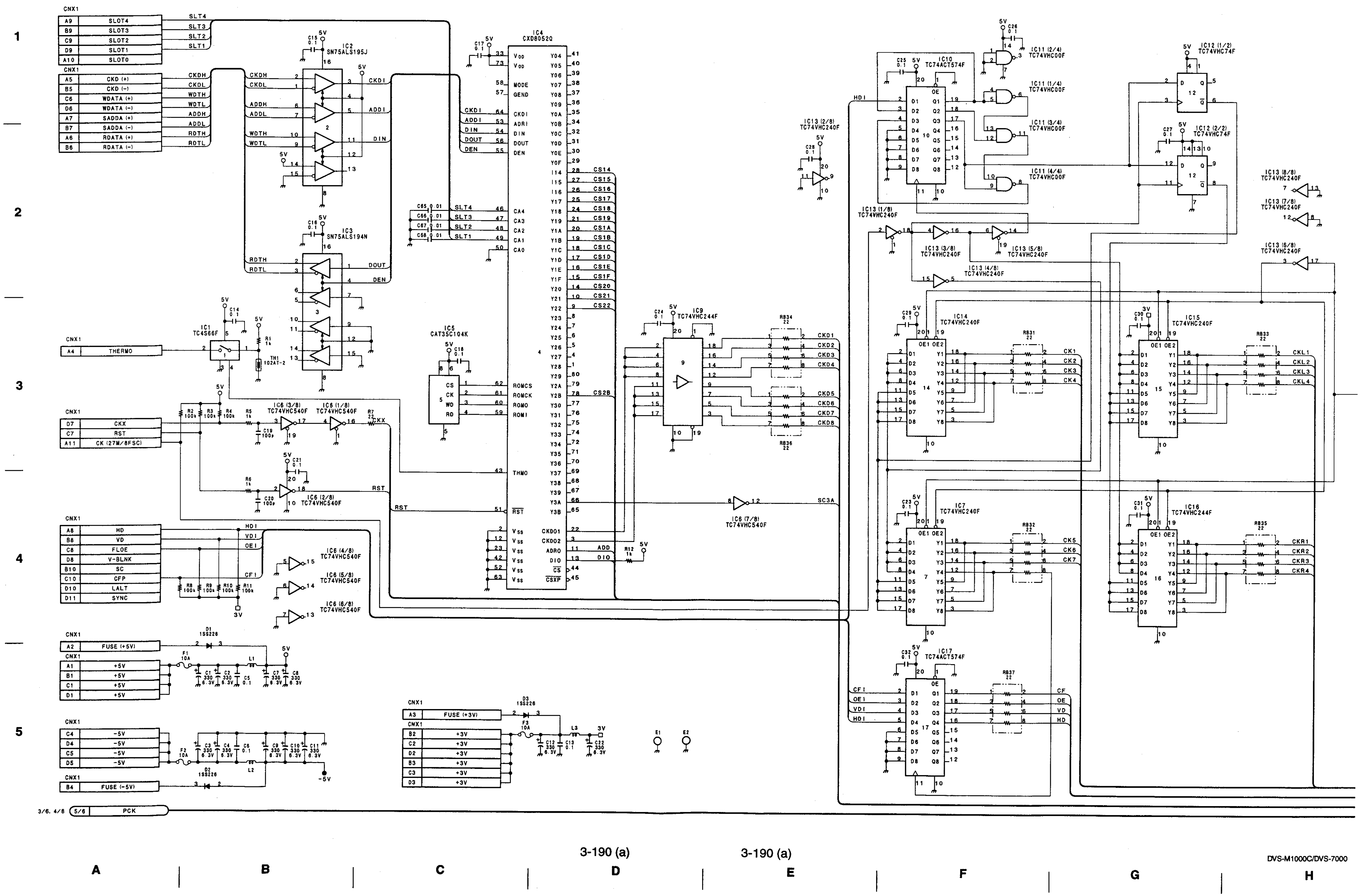

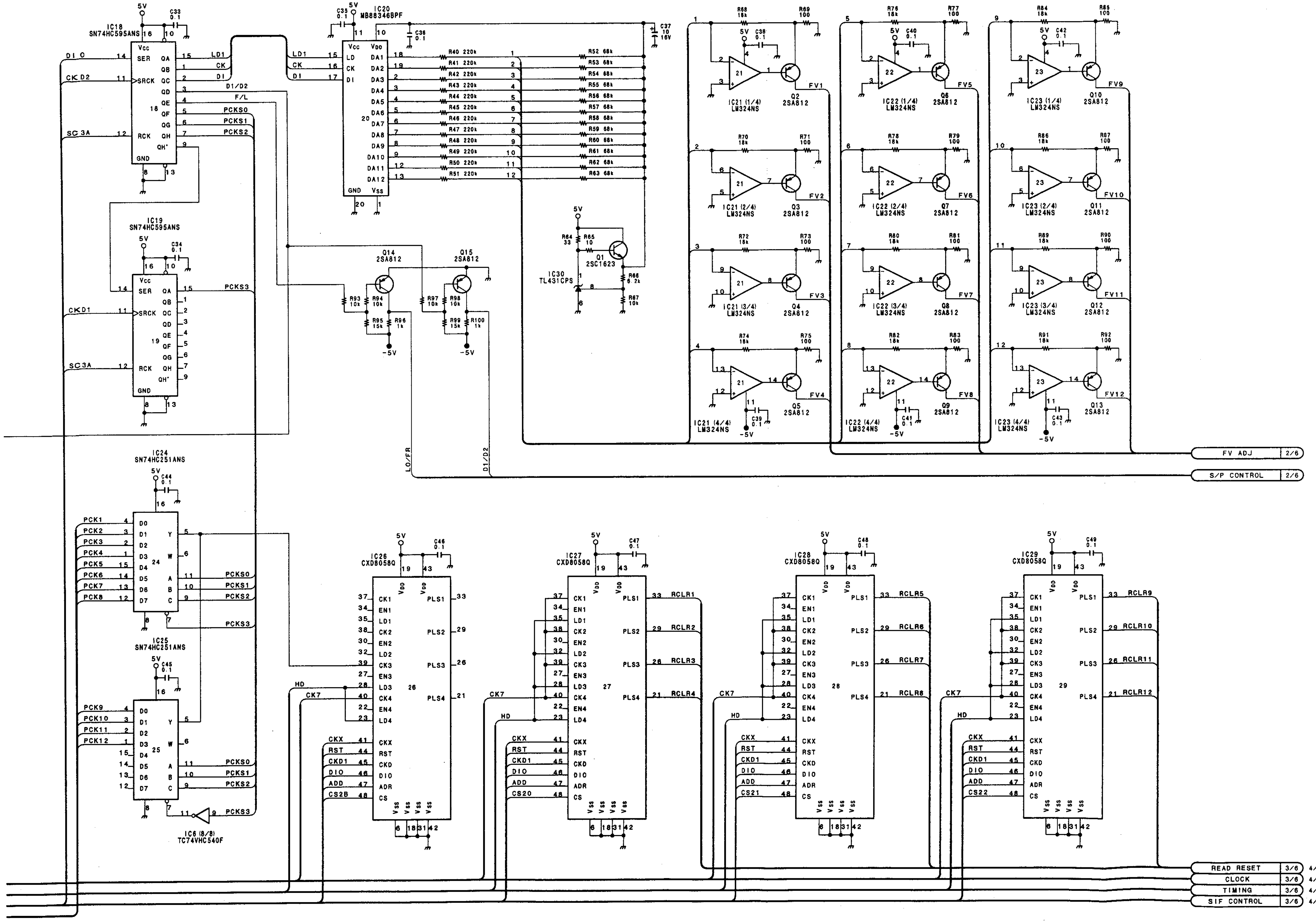

12 Input Serial Digital Board
DI-22 (1/6)
BKDS-7102
BOARD NO. 1-658-404-11
LOT NO. 506-508
FOR DVS-M1000C/DVS-7000
B-¥SJX050-DI22-11

BKDS-7102 (SY) : S/N 10001 through 10250

1

2

3

4

5

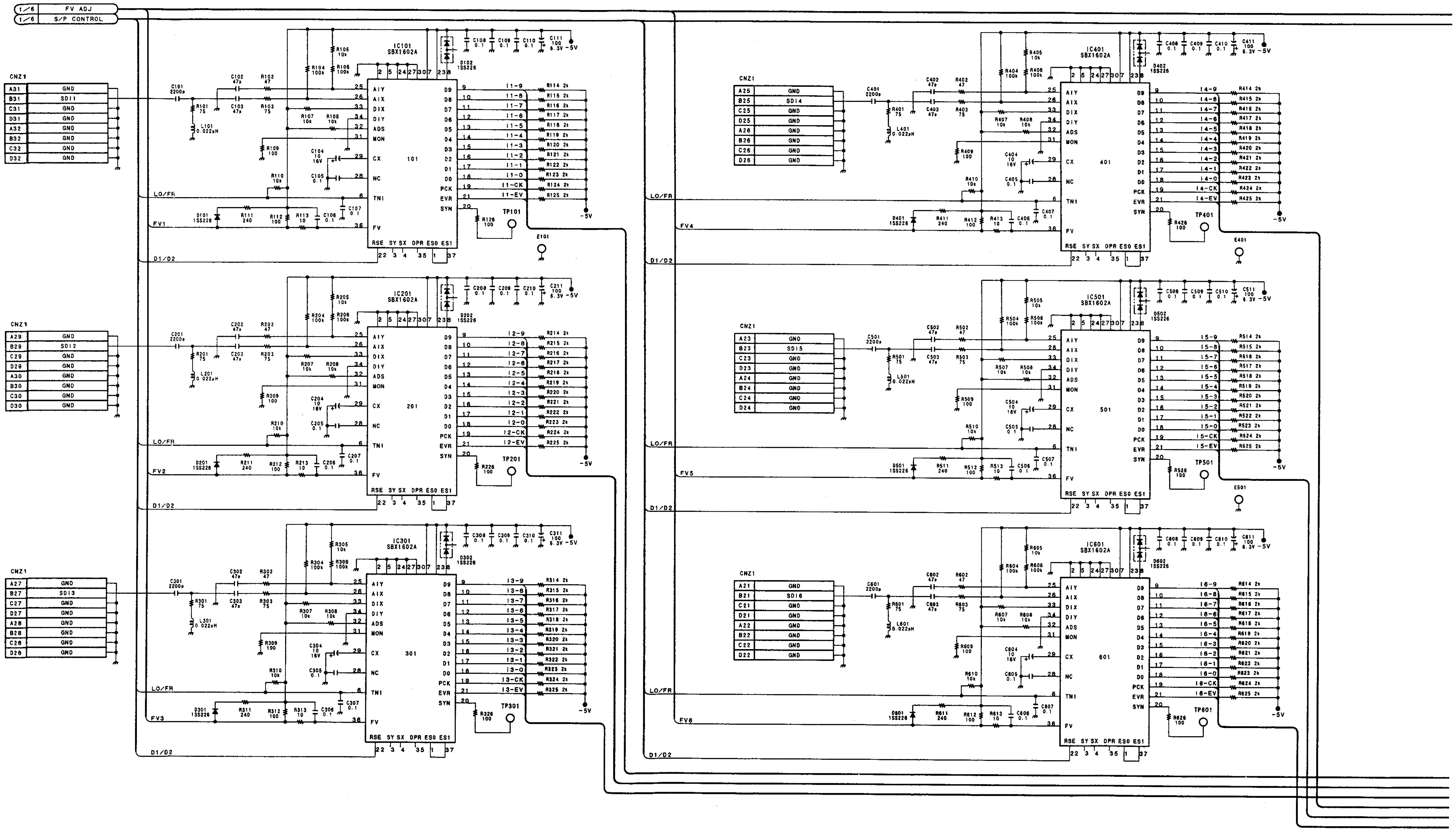

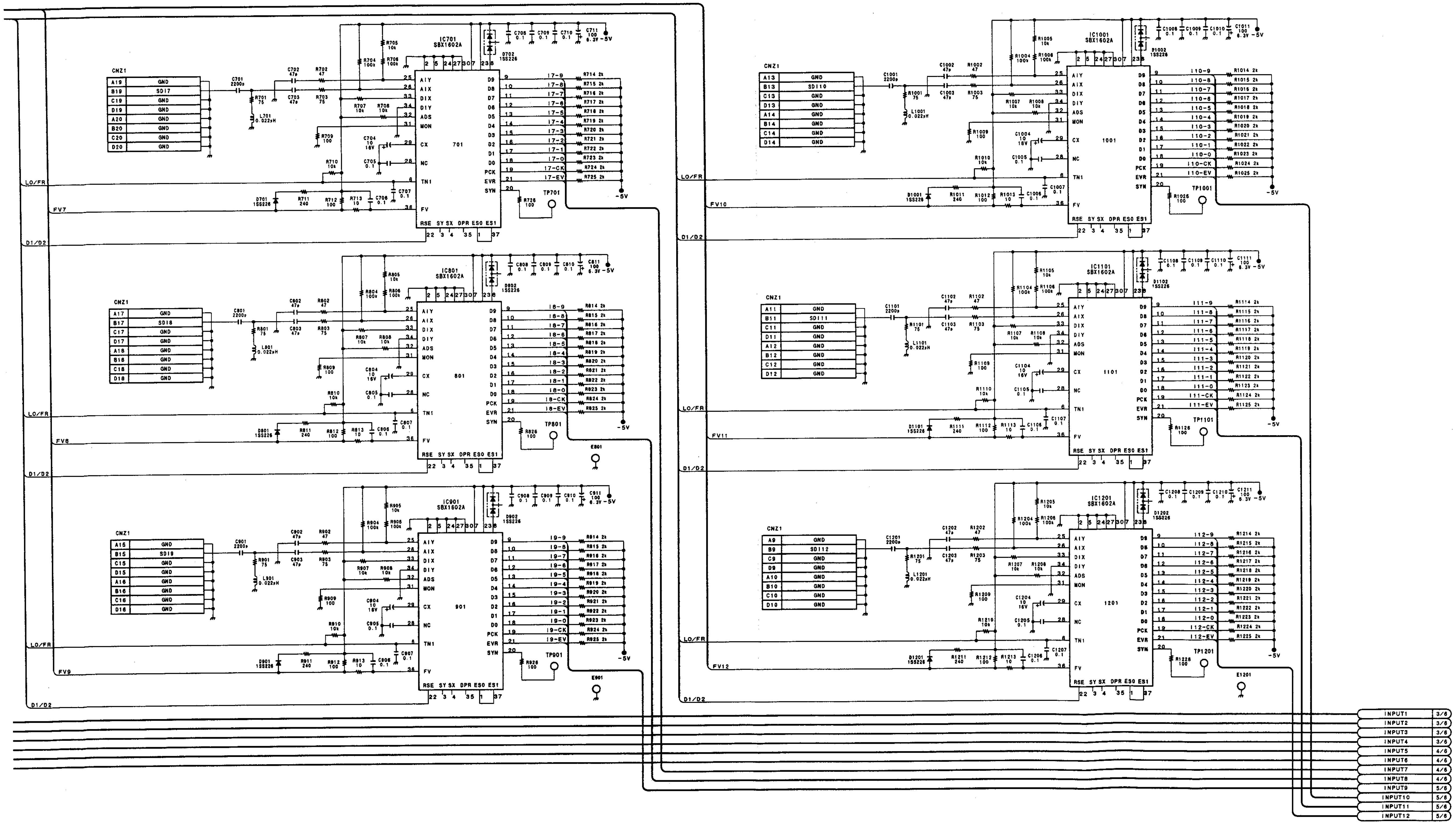

1 2 3 4 5

12 Input Serial Digital Board
DI-22 (2/6)
BKDS-7102
BOARD NO. 1-658-404-11
LOT NO. 506-508
FOR DVS-M1000C/DVS-7000
B-¥SJX050-DI22-11

BKDS-7102 (SY) : S/N 10001 through 10250

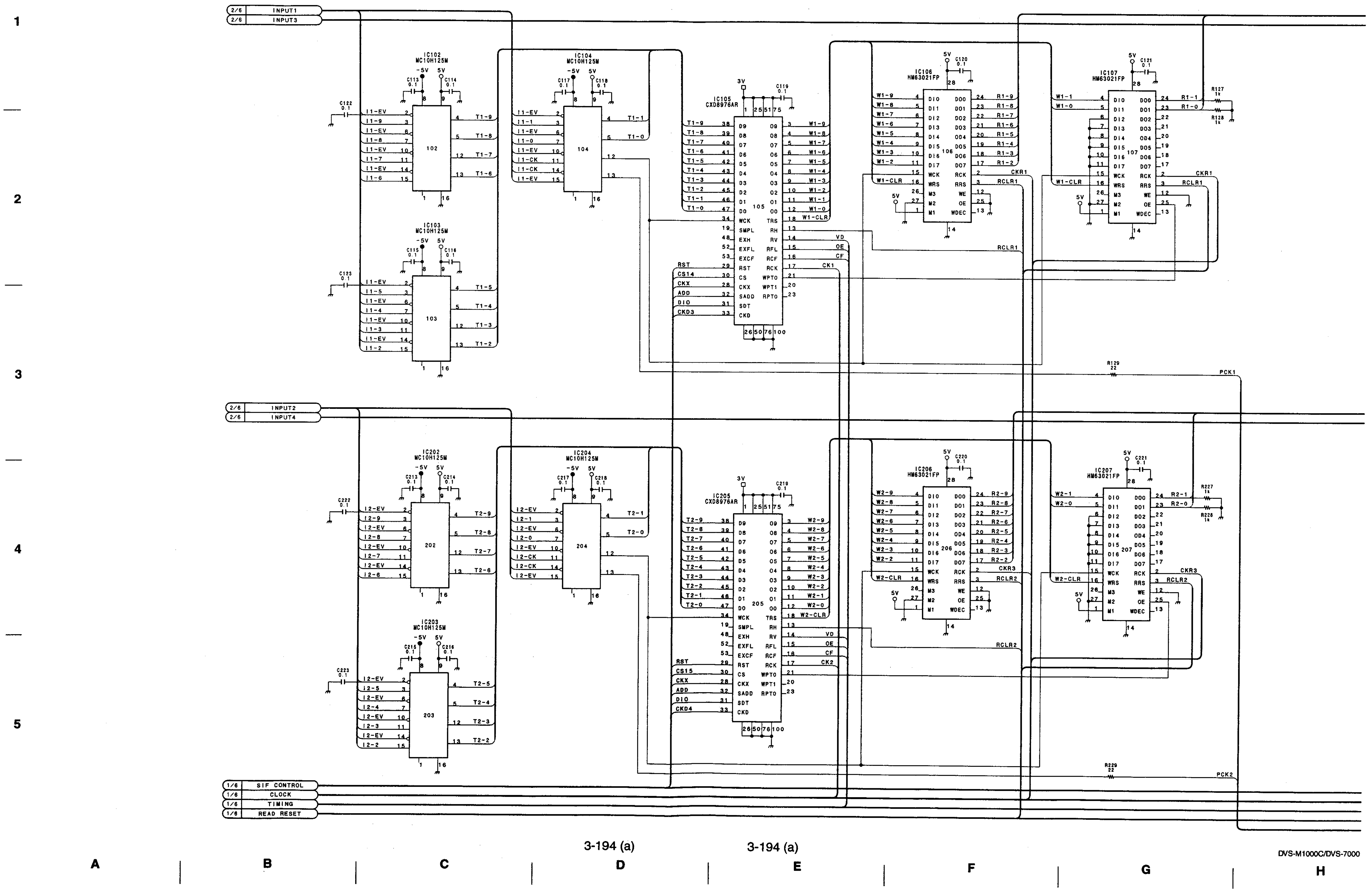

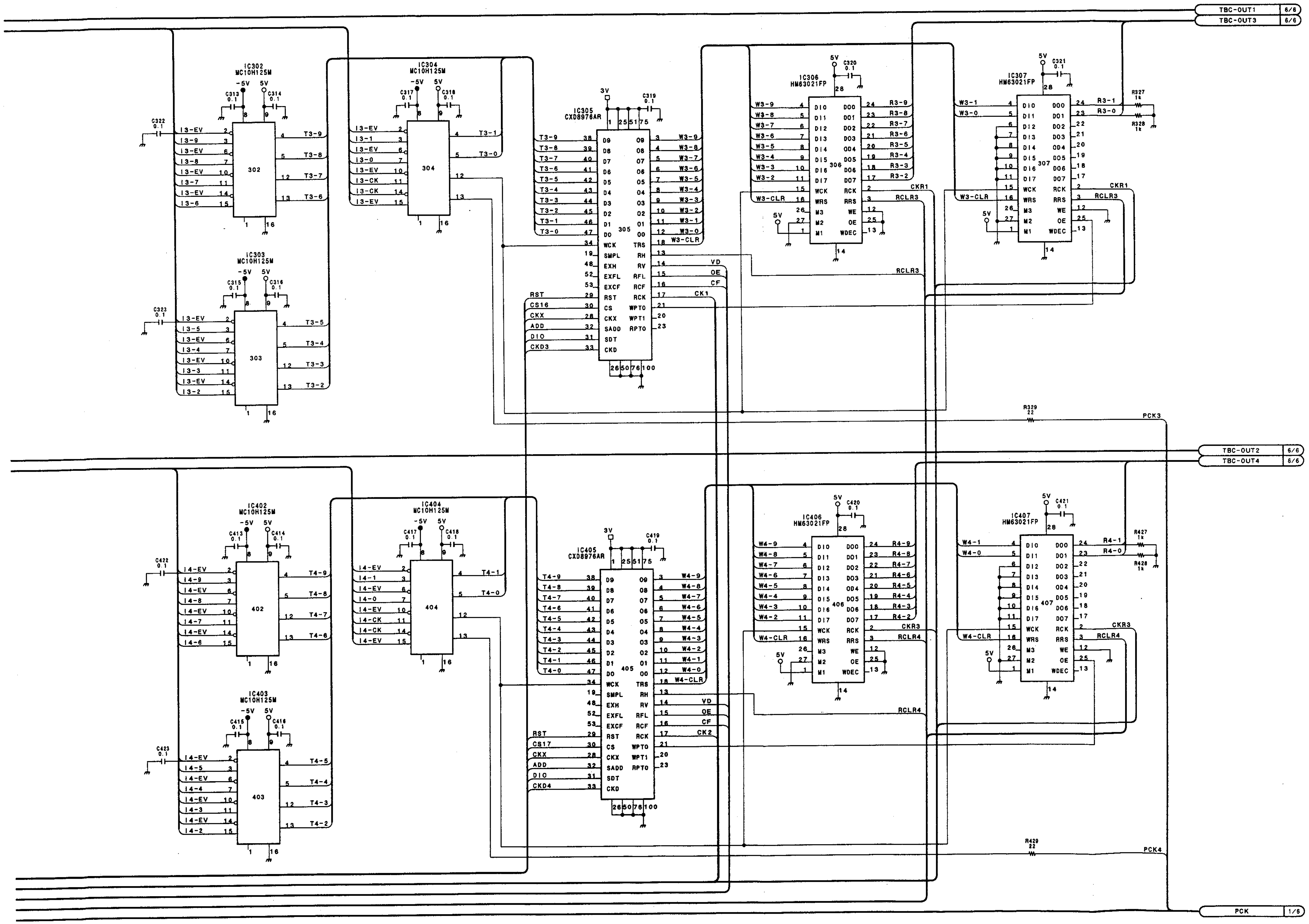

1
2
3
4
5

12 Input Serial Digital Board
DI-22 (3/6)
BKDS-7102
BOARD NO. 1-658-404-11
LOT NO. 506-508
FOR DVS-M1000C/DVS-7000
B-¥SJX050-DI22-11

I | J | K | L | M | N | O | P

BKDS-7102 (SY) : S/N 10001 through 10250

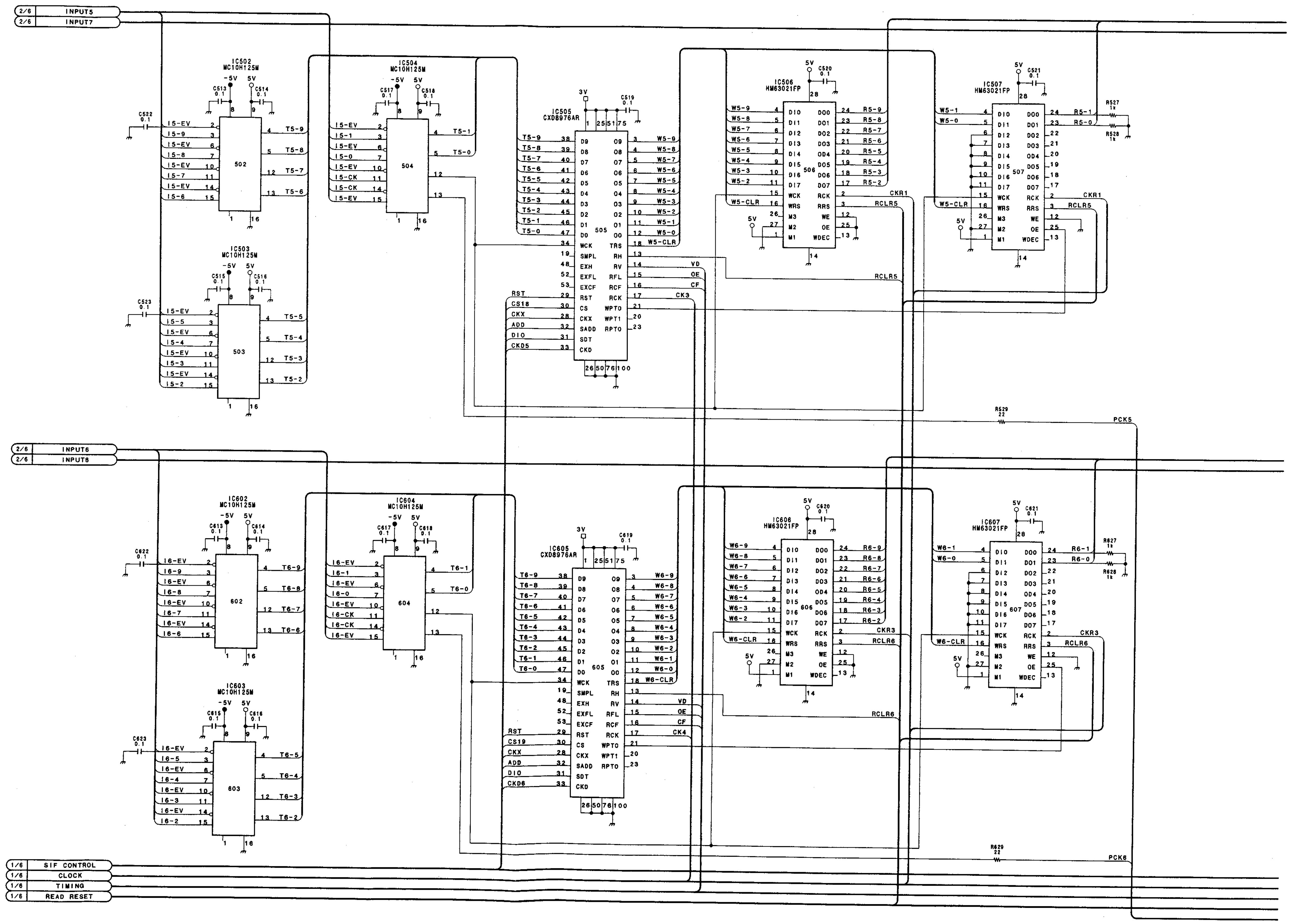

A B C D E F G H

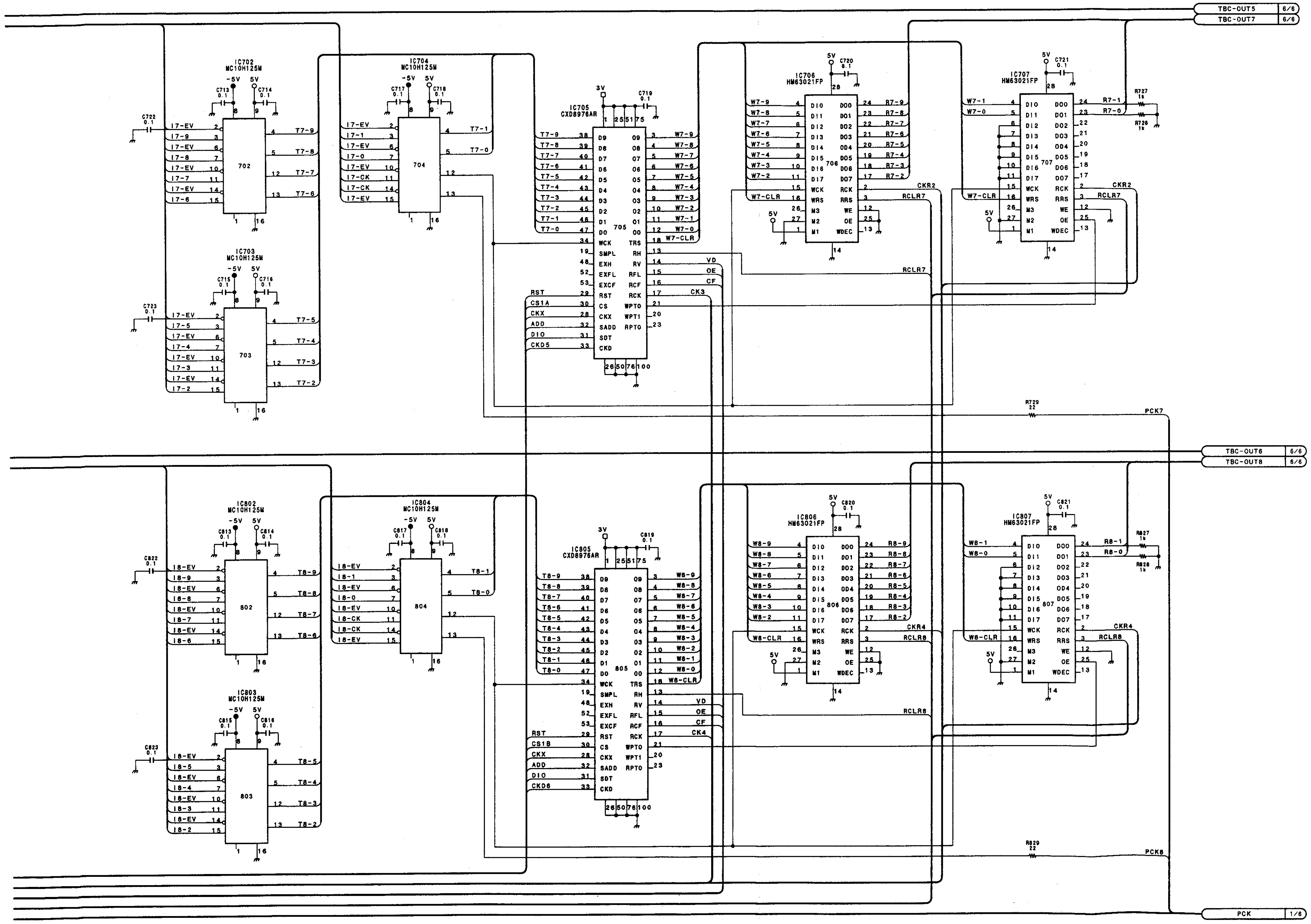

12 Input Serial Digital Board
DI-22 (4/6)
BKDS-7102
BOARD NO. 1-658-404-11
LOT NO. 506-508
FOR DVS-M1000C/DVS-7000
B-¥SJX050-DI22-11

1 2 3 4 5

I J K L M N O P

BKDS-7102 (SY) : S/N 10001 through 10250

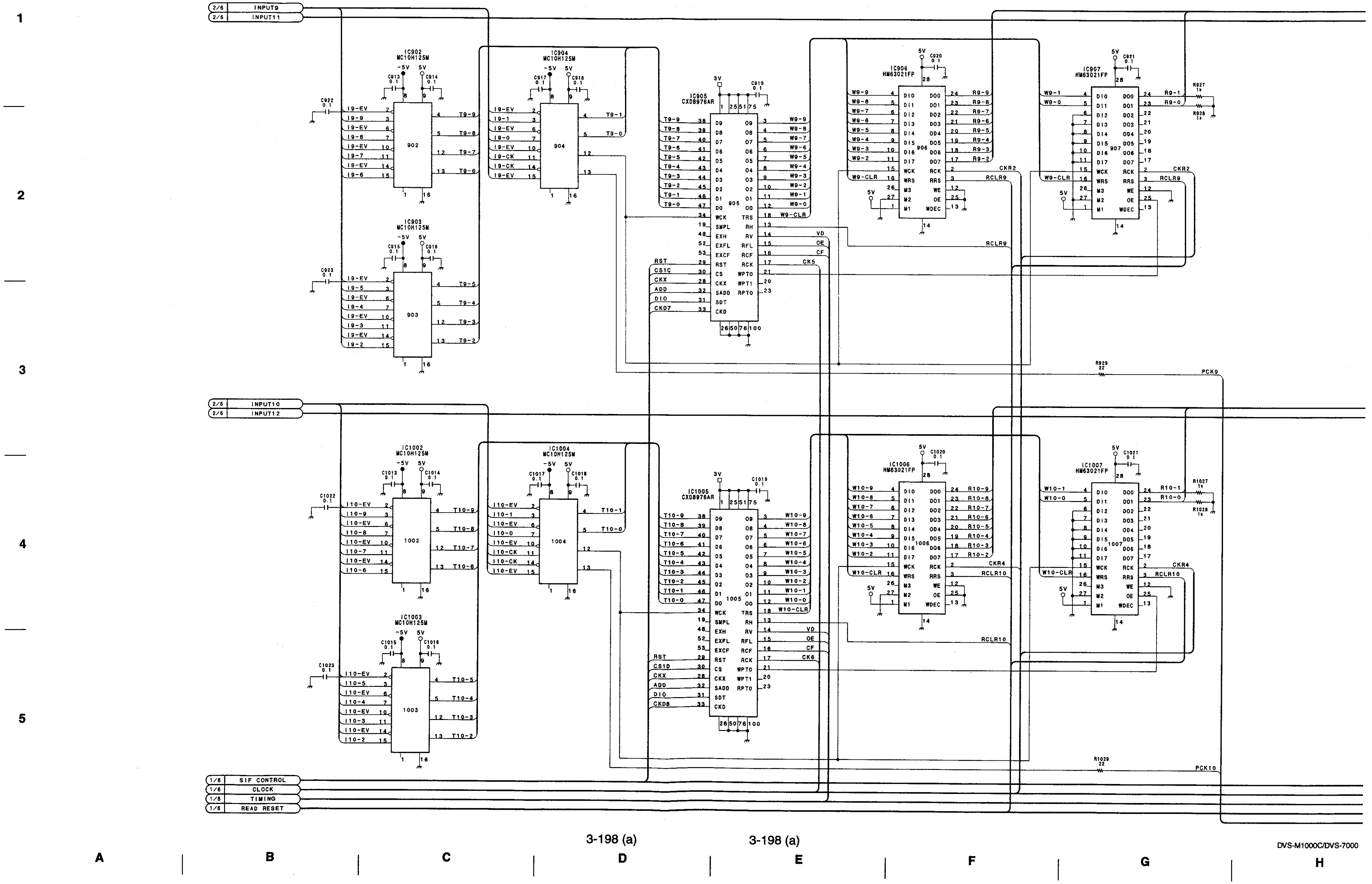

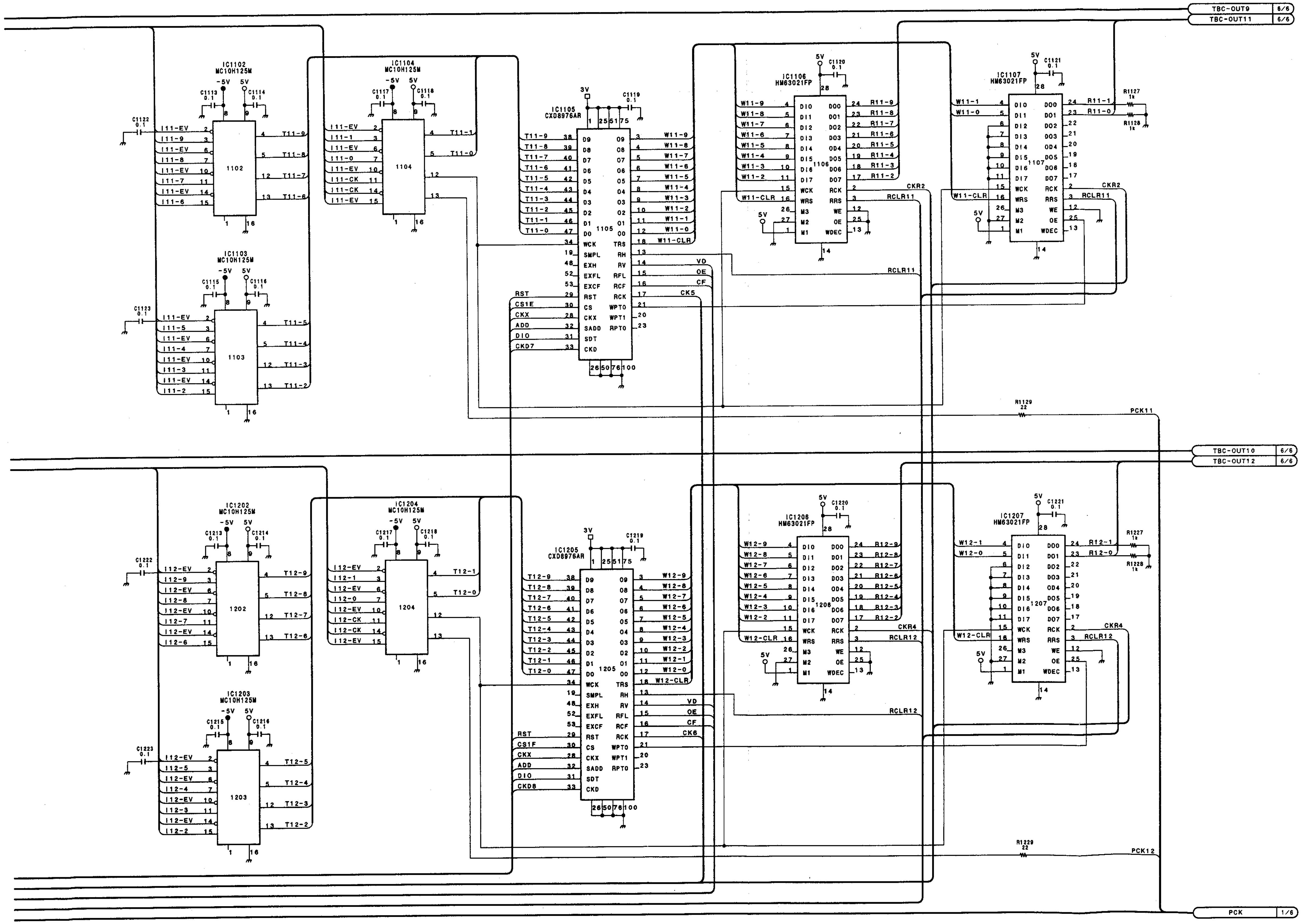

12 Input Serial Digital Board
DI-22 (5/6)
BKDS-7102
BOARD NO. 1-658-404-11
LOT NO. 506-508
FOR DVS-M1000C/DVS-7000
B-¥SJX050-DI22-11

BKDS-7102 (SY) : S/N 10001 through 10250

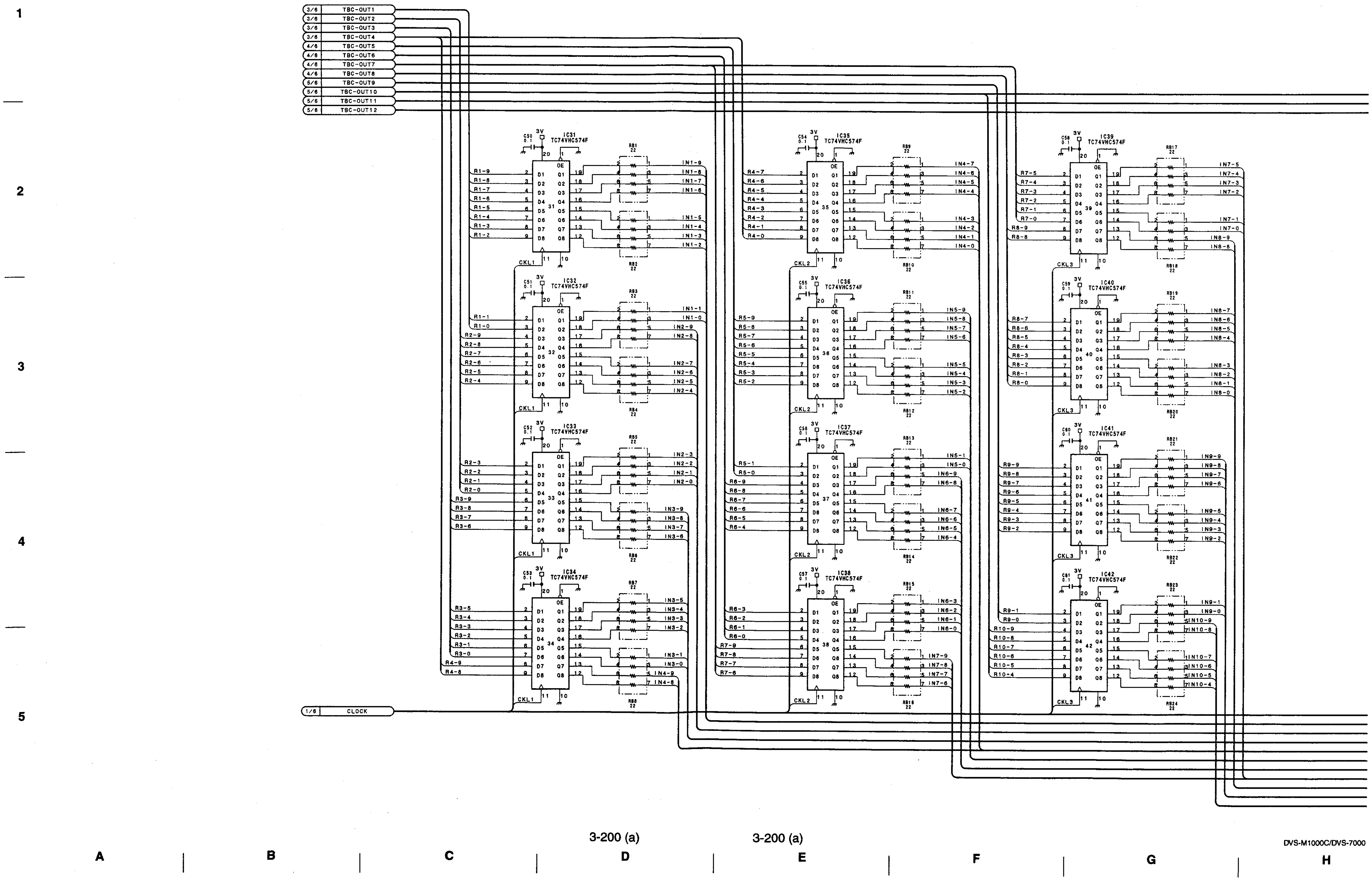

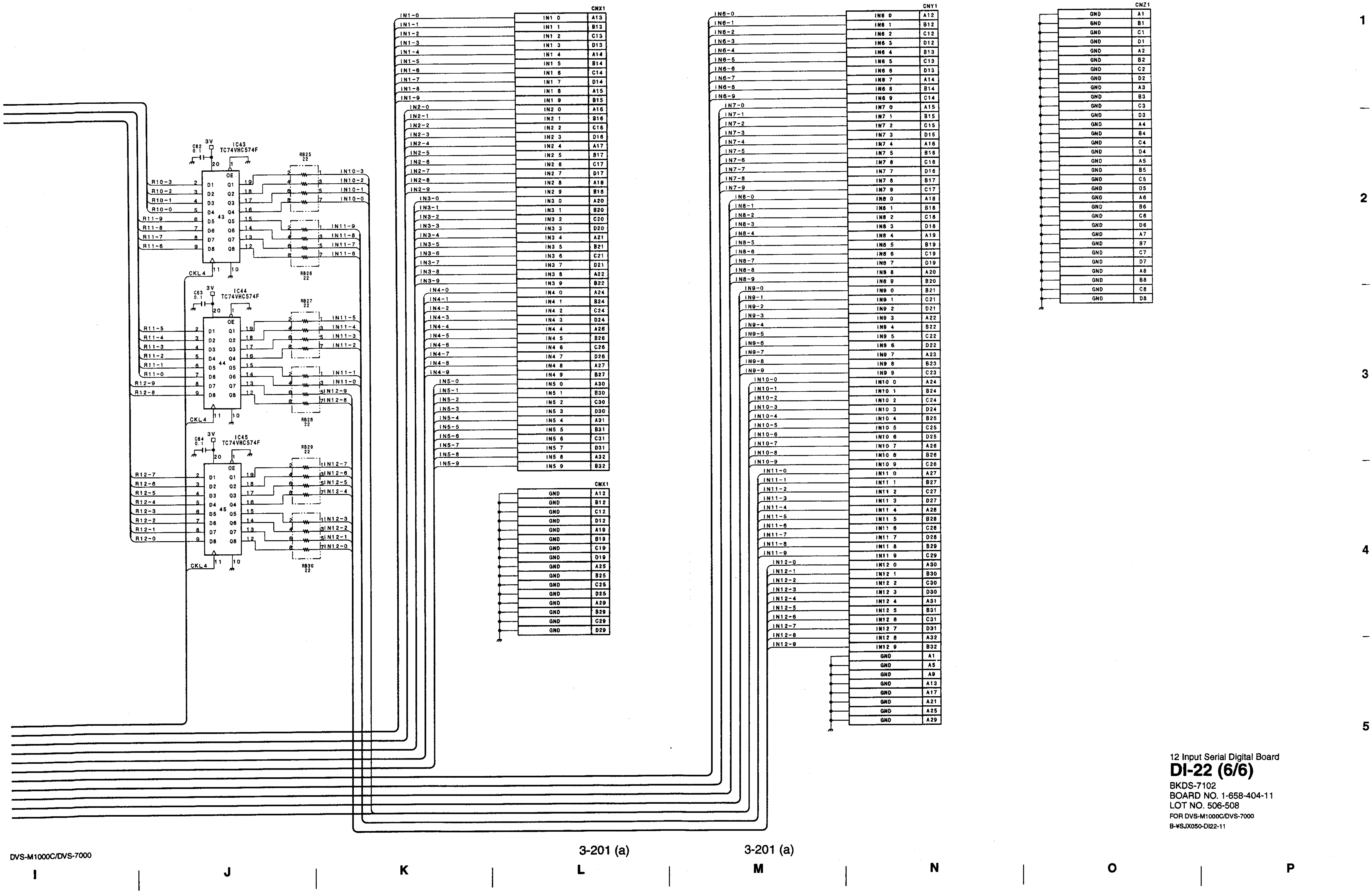

12 Input Serial Digital Board
DI-22 (6/6)
BKDS-7102
BOARD NO. 1-658-404-11
LOT NO. 506-508
FOR DVS-M1000C/DVS-7000
B-¥SJX050-DI22-11

BKDS-7112 (SY) : S/N 10401 and Higher

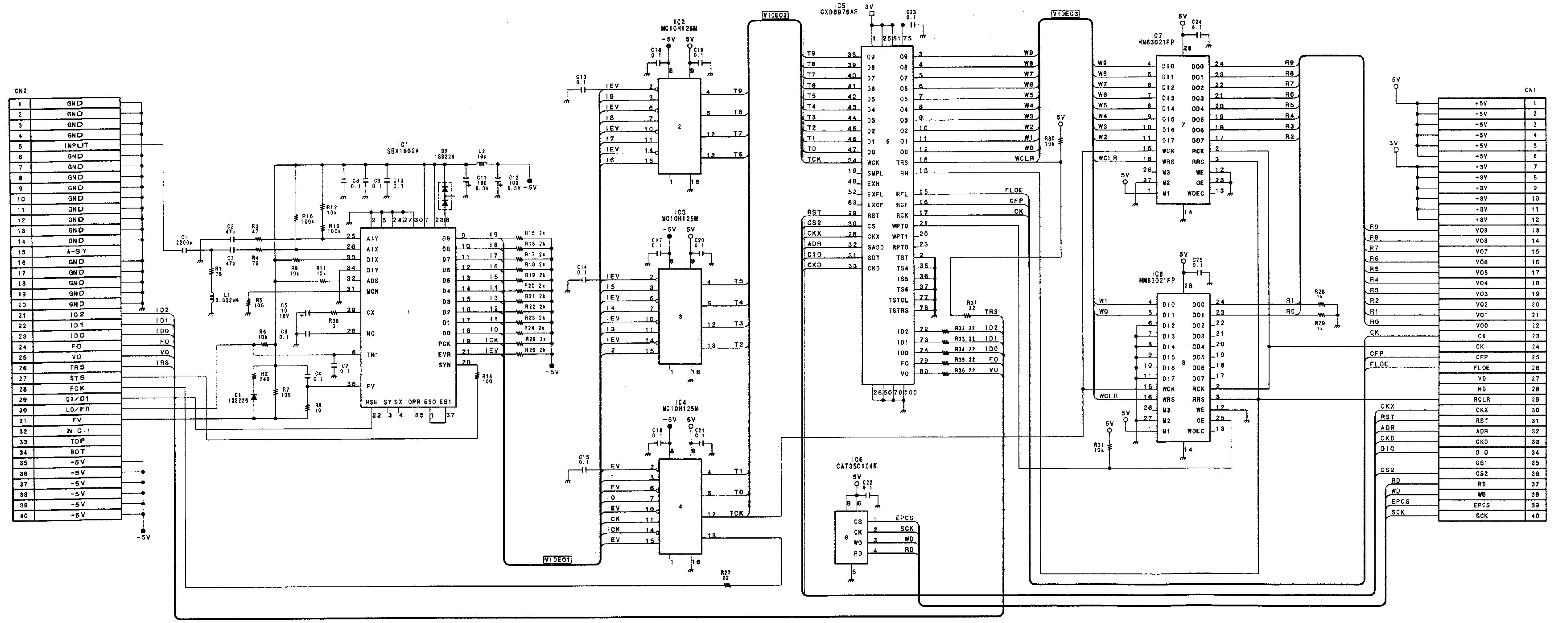

Serial Digital Input Board
DI-24
BKDS-7112
BOARD NO. 1-658-410-12
LOT NO. 509-
FOR DVS-7000/DMK-7000
B-¥SJX050-DI24

BKDS-7112 (SY) : S/N 10001 through10400

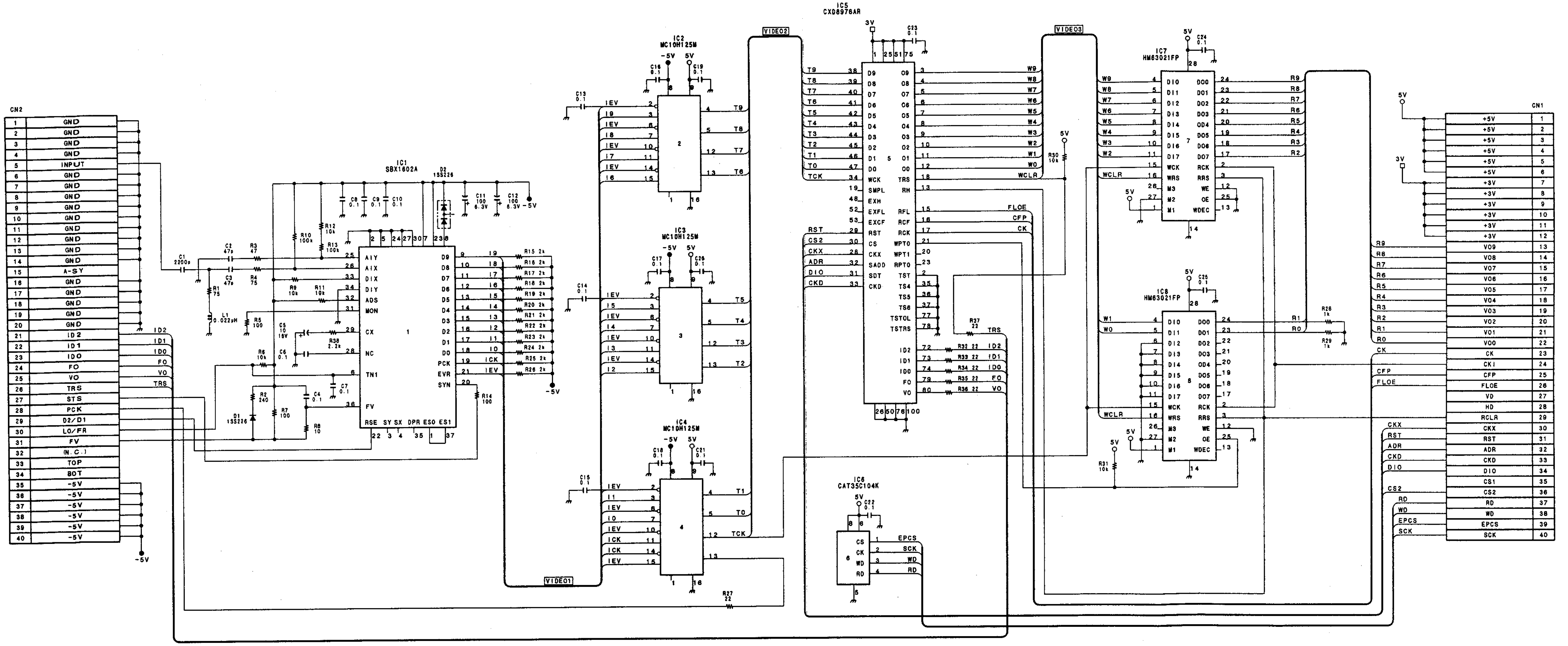

Serial Digital Input Board
DI-24
BKDS-7112
BOARD NO. 1-658-410-11
LOT NO. 506-508
FOR DVS-7000/DMK-7000
B-¥SJX050-DI24-11

BKDS-7133 (SY) : S/N 10001 and Higher

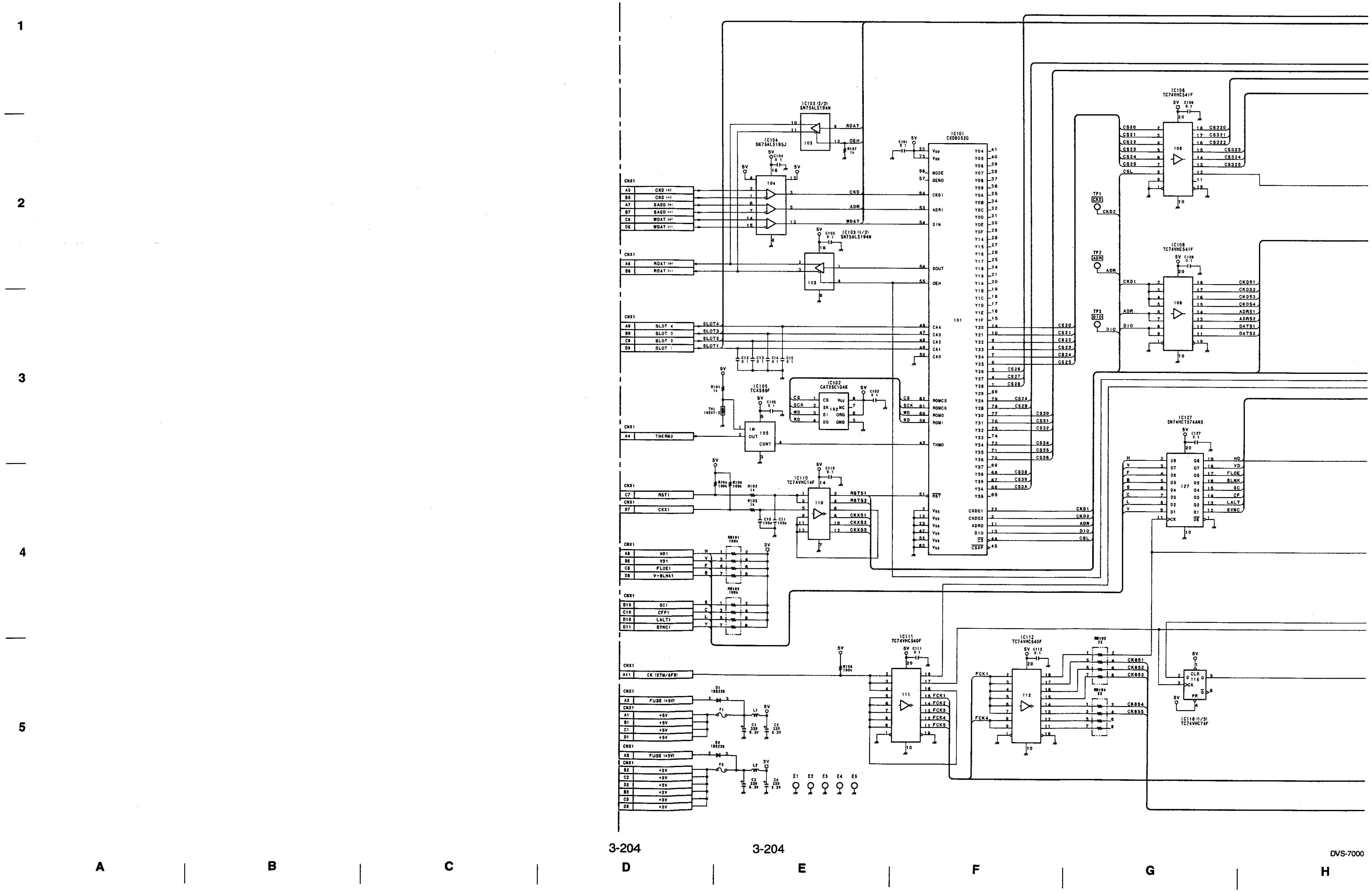

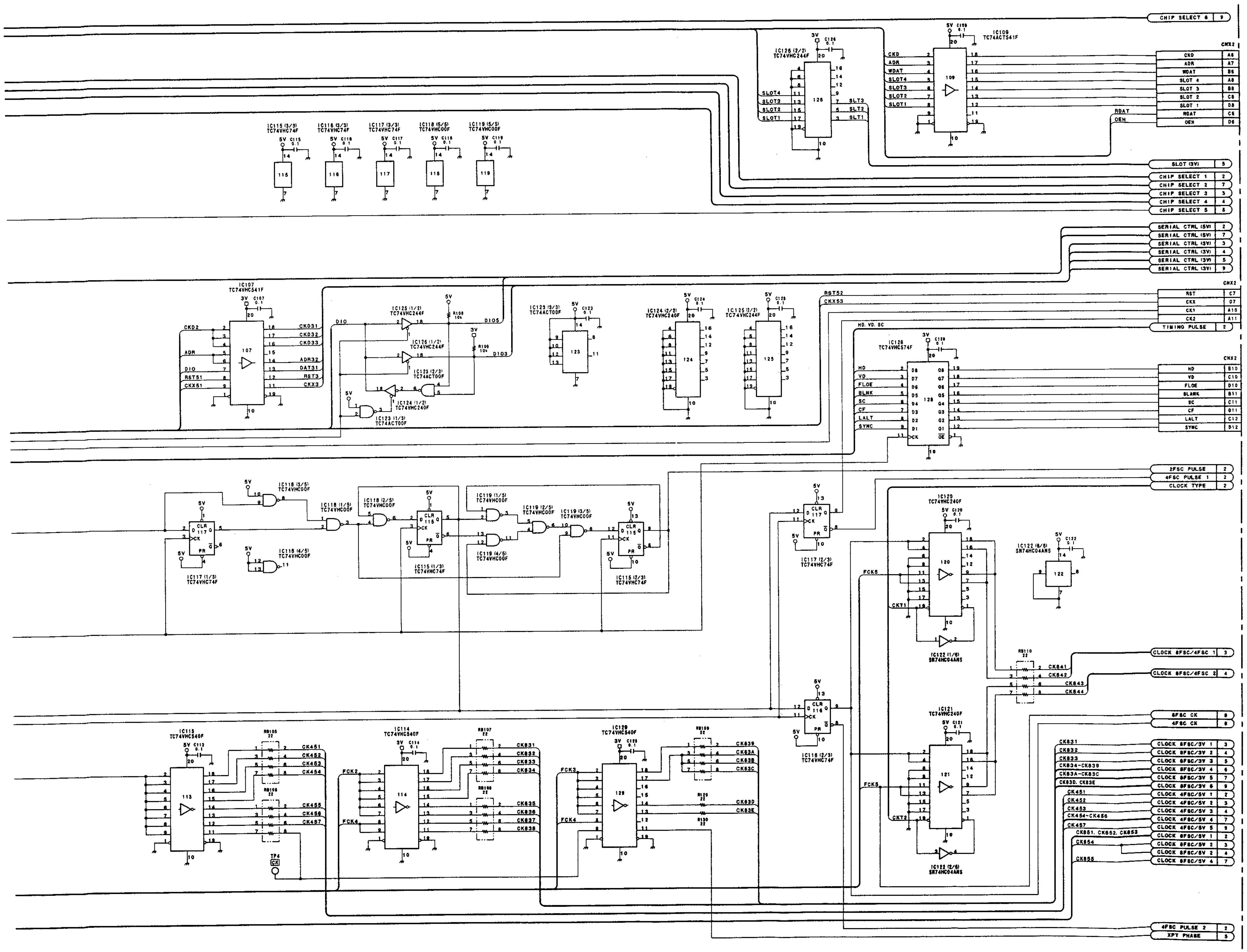

1
2
3
4
5

Encoder Board
ENC-34 (1/9)
BKDS-7133
BOARD NO. 1-658-418-11
LOT NO. 507-
FOR DVS-7000
B-¥SJX050-ENC34

I J K L M N O P

BKDS-7133 (SY) : S/N 10001 and Higher

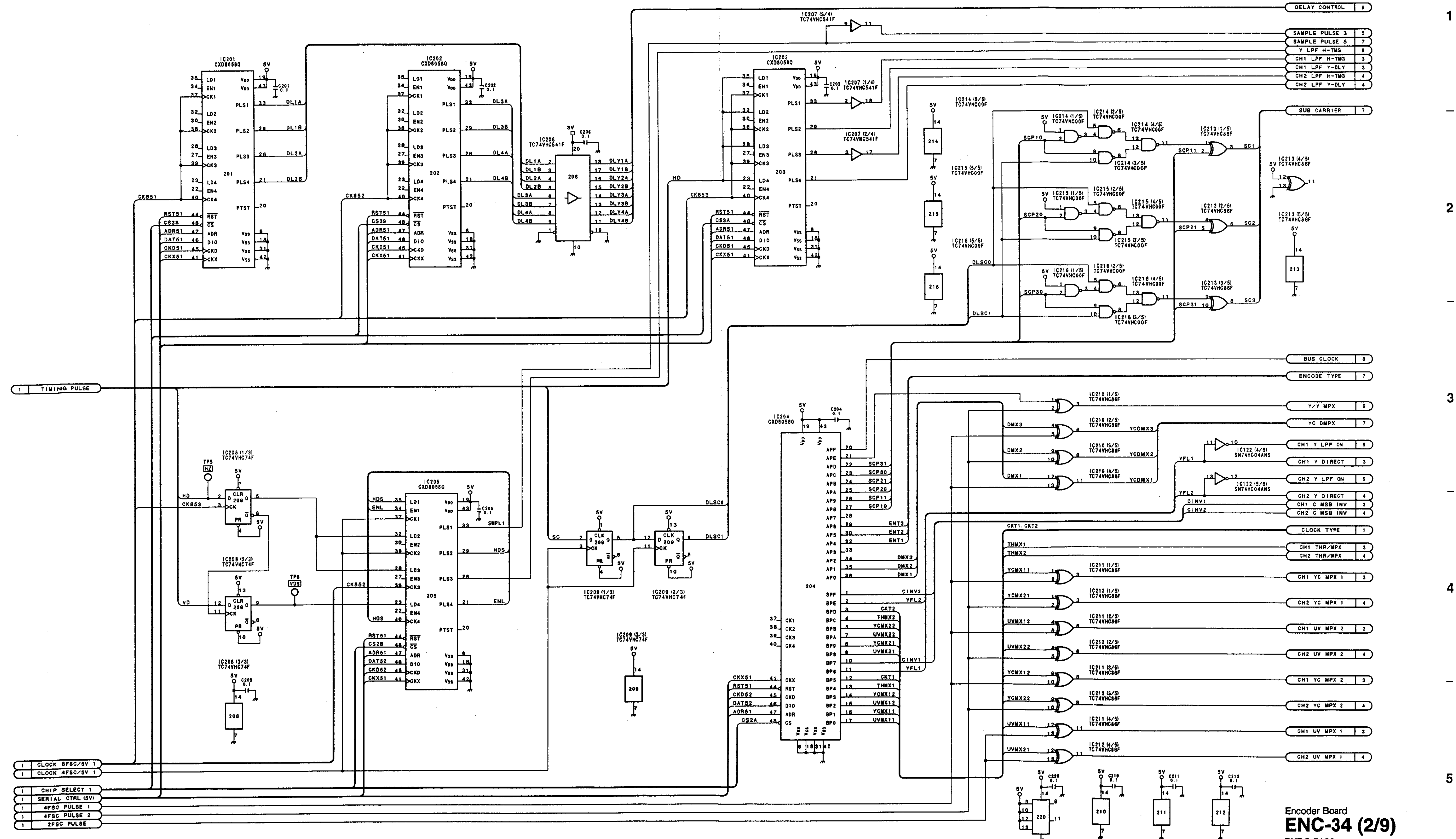

Encoder Board
ENC-34 (2/9)
BKDS-7133
BOARD NO. 1-658-418-11
LOT NO. 507-
FOR DVS-7000
B-¥SJX050-ENC34

BKDS-7133 (SY) : S/N 10001 and Higher

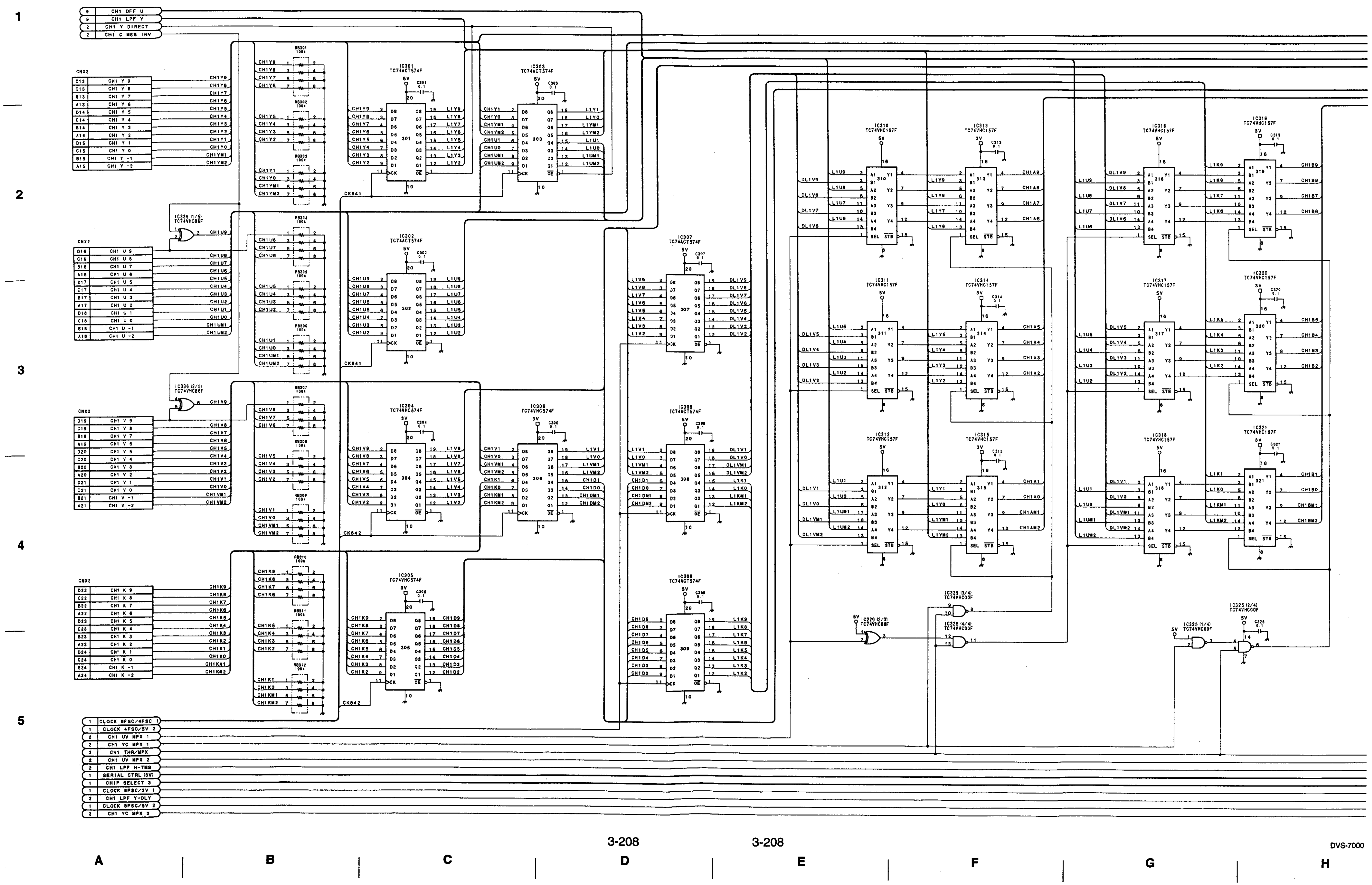

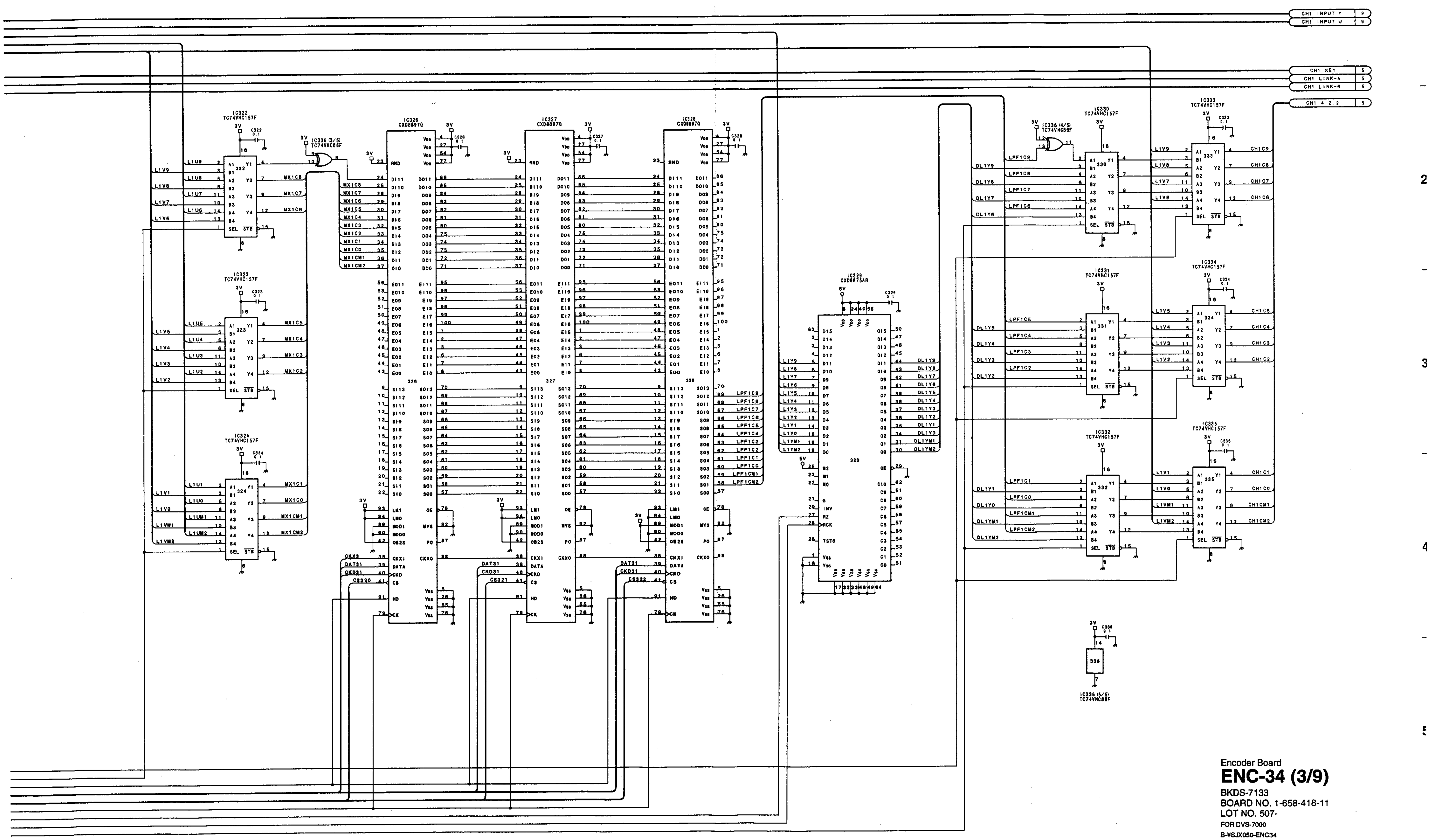

Encoder Board
ENC-34 (3/9)
BKDS-7133
BOARD NO. 1-658-418-11
LOT NO. 507-
FOR DVS-7000
B-¥SJX050-ENC34

BKDS-7133 (SY) : S/N 10001 and Higher

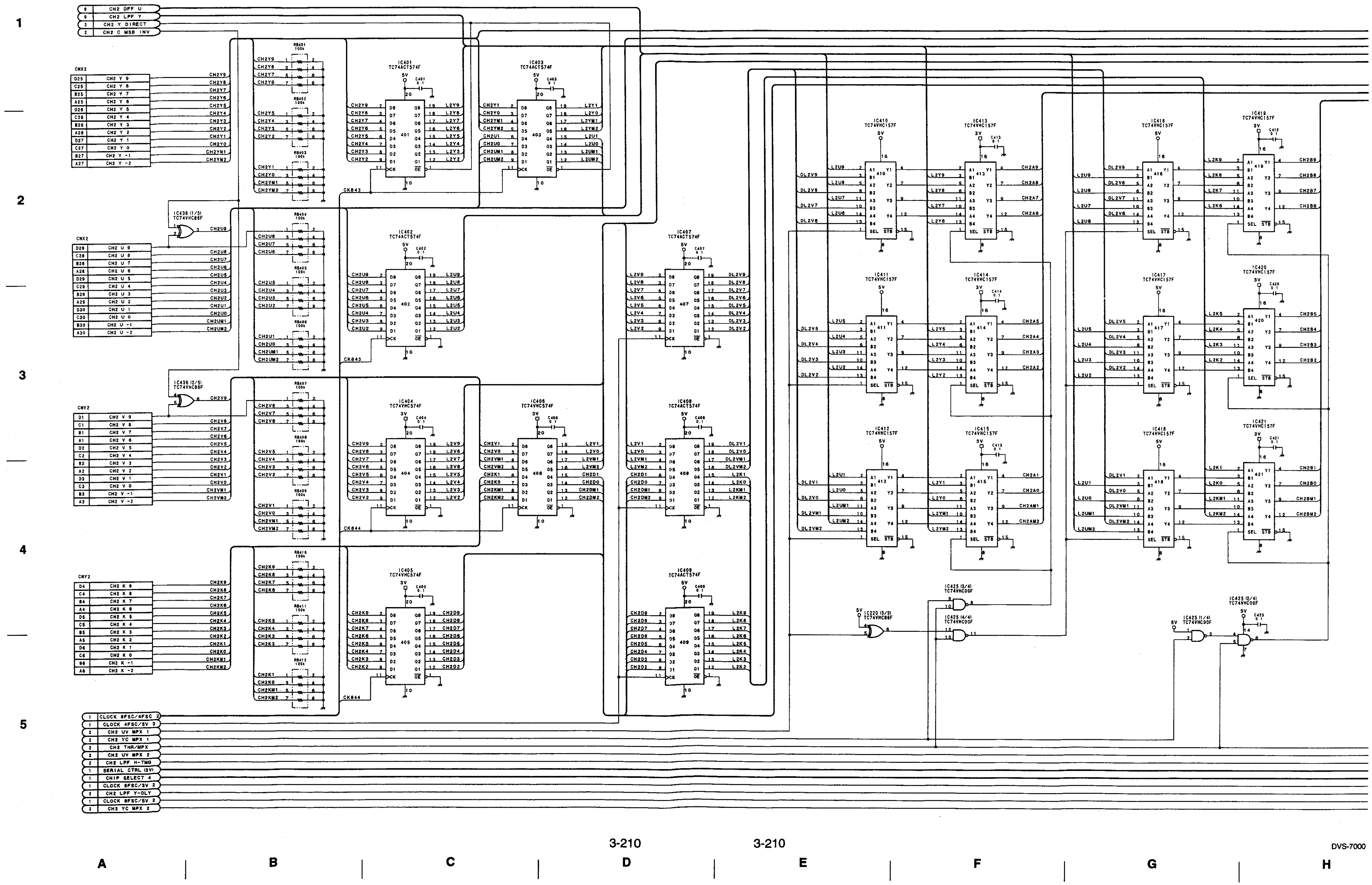

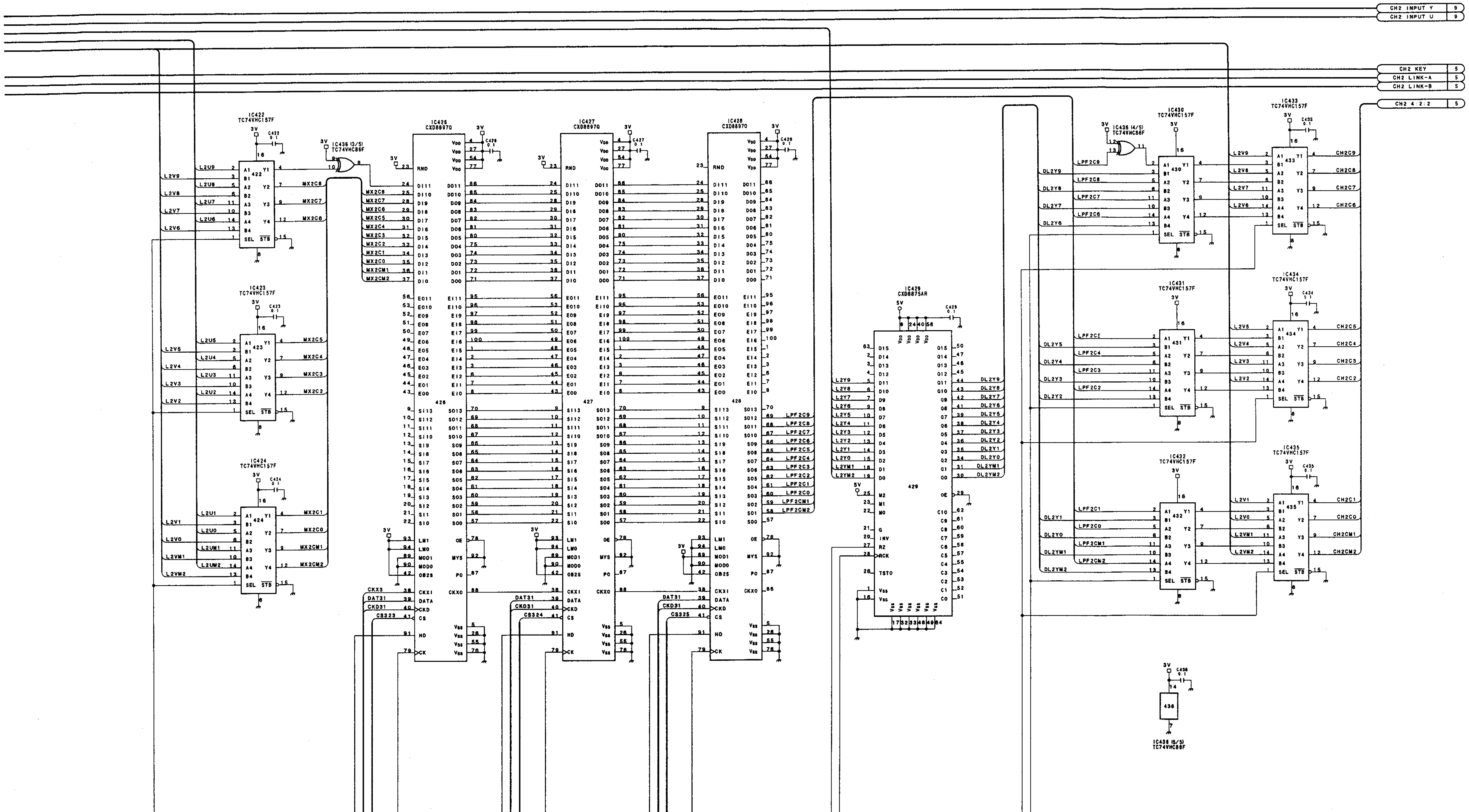

Encoder Board
ENC-34 (4/9)
BKDS-7133
BOARD NO. 1-658-418-11
LOT NO. 507-
FOR DVS-7000
B-¥SJX050-ENC34

BKDS-7133 (SY) : S/N 10001 and Higher

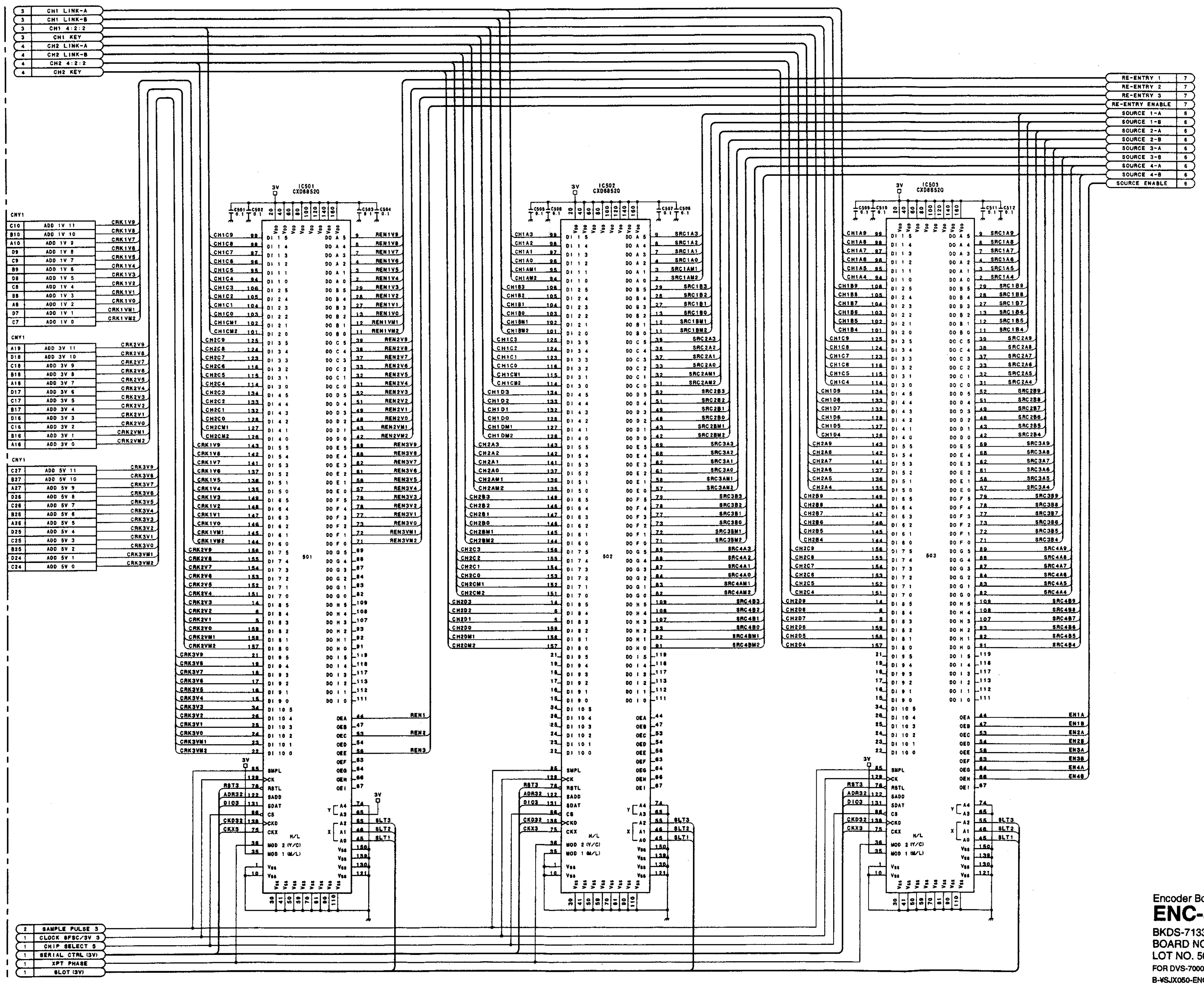

Encoder Board
ENC-34 (5/9)
BKDS-7133
BOARD NO. 1-658-418-11
LOT NO. 507-
FOR DVS-7000
B-¥SJX050-ENC34

BKDS-7133 (SY) : S/N 10001 and Higher

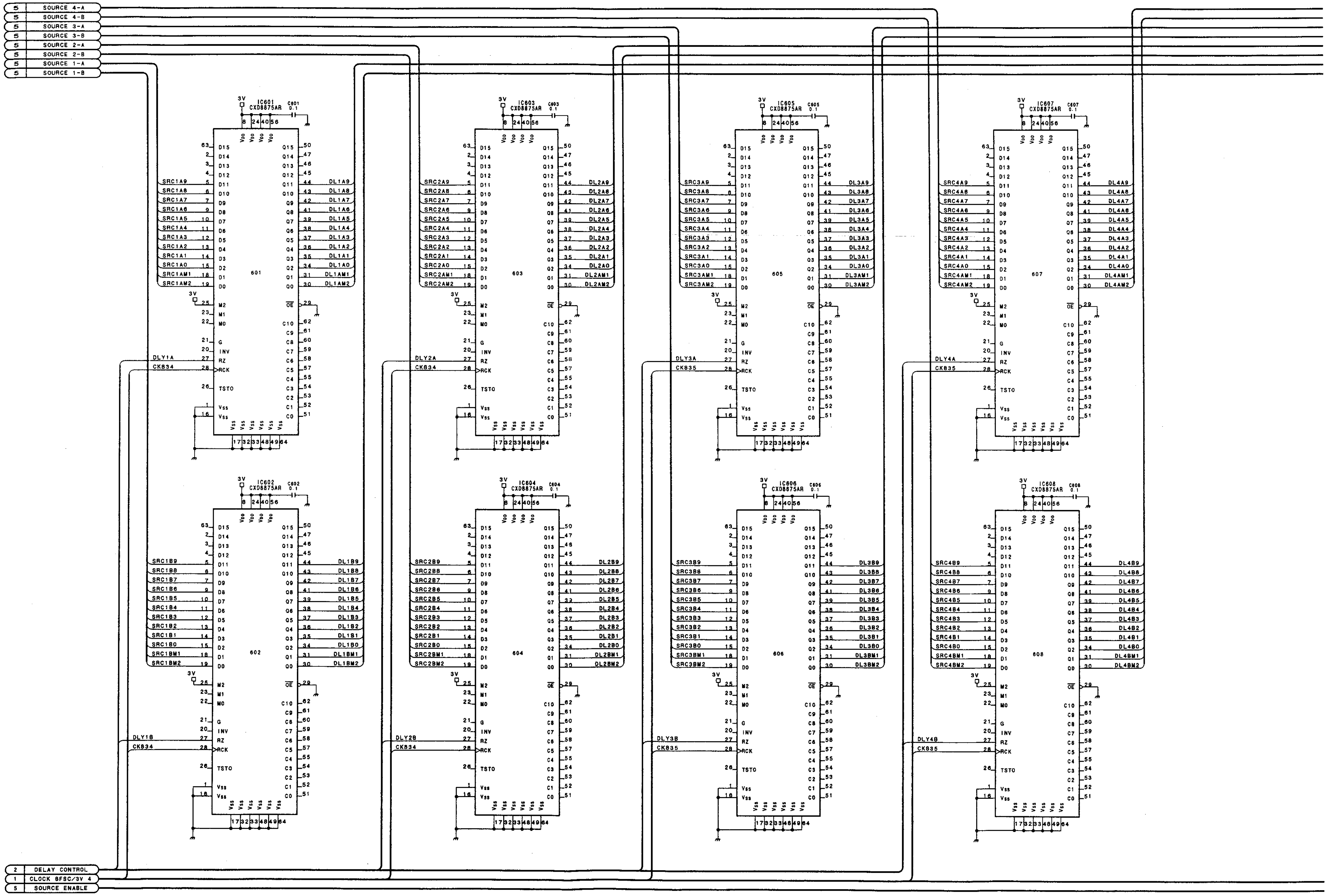

1
2
3
4
5

A | B | C | D | E | F | G | H

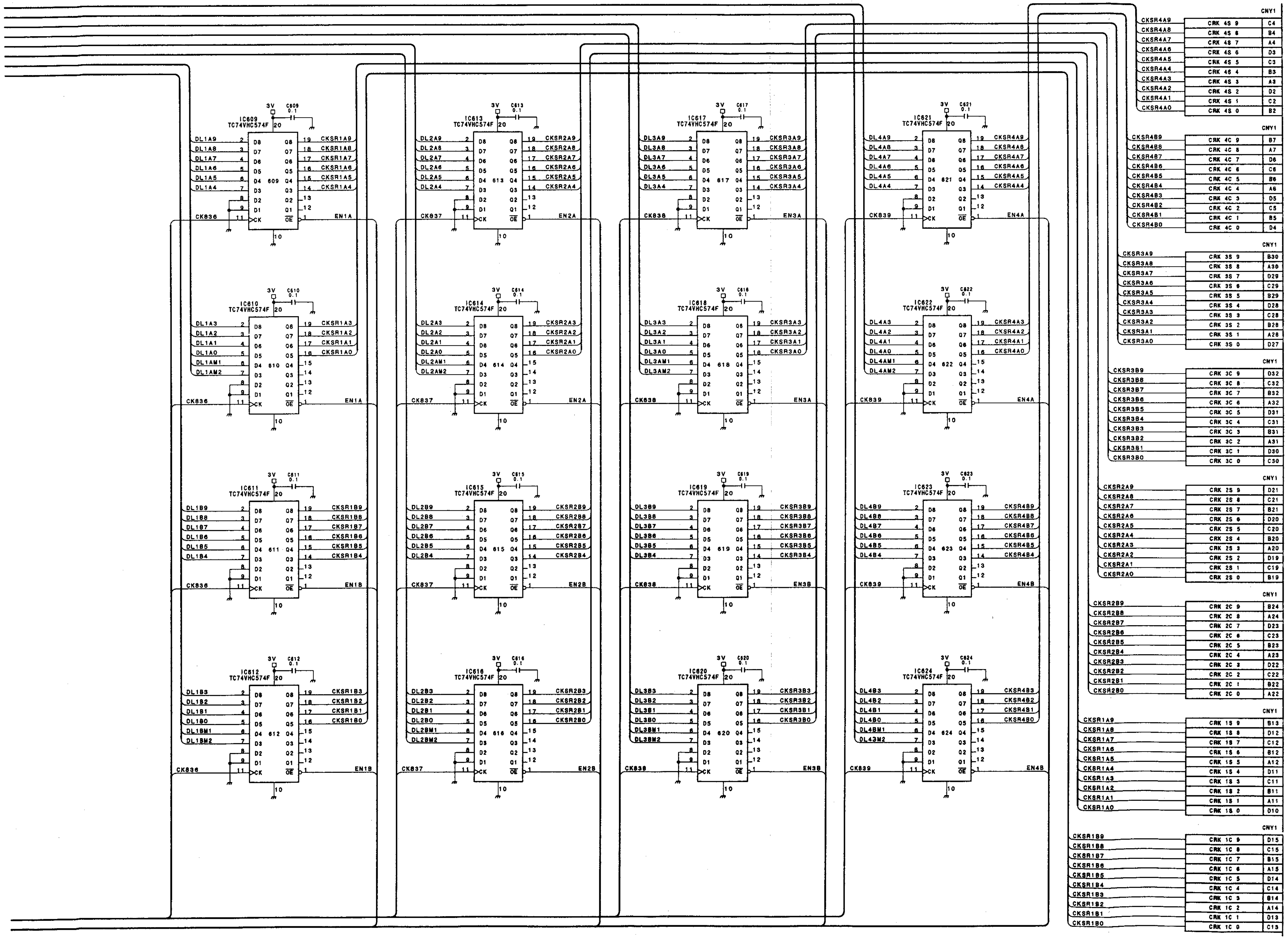

Encoder Board
ENC-34 (6/9)
BKDS-7133
BOARD NO. 1-658-418-11
LOT NO. 507-
FOR DVS-7000
B-¥SJX050-ENC34

BKDS-7133 (SY) : S/N 10001 and Higher

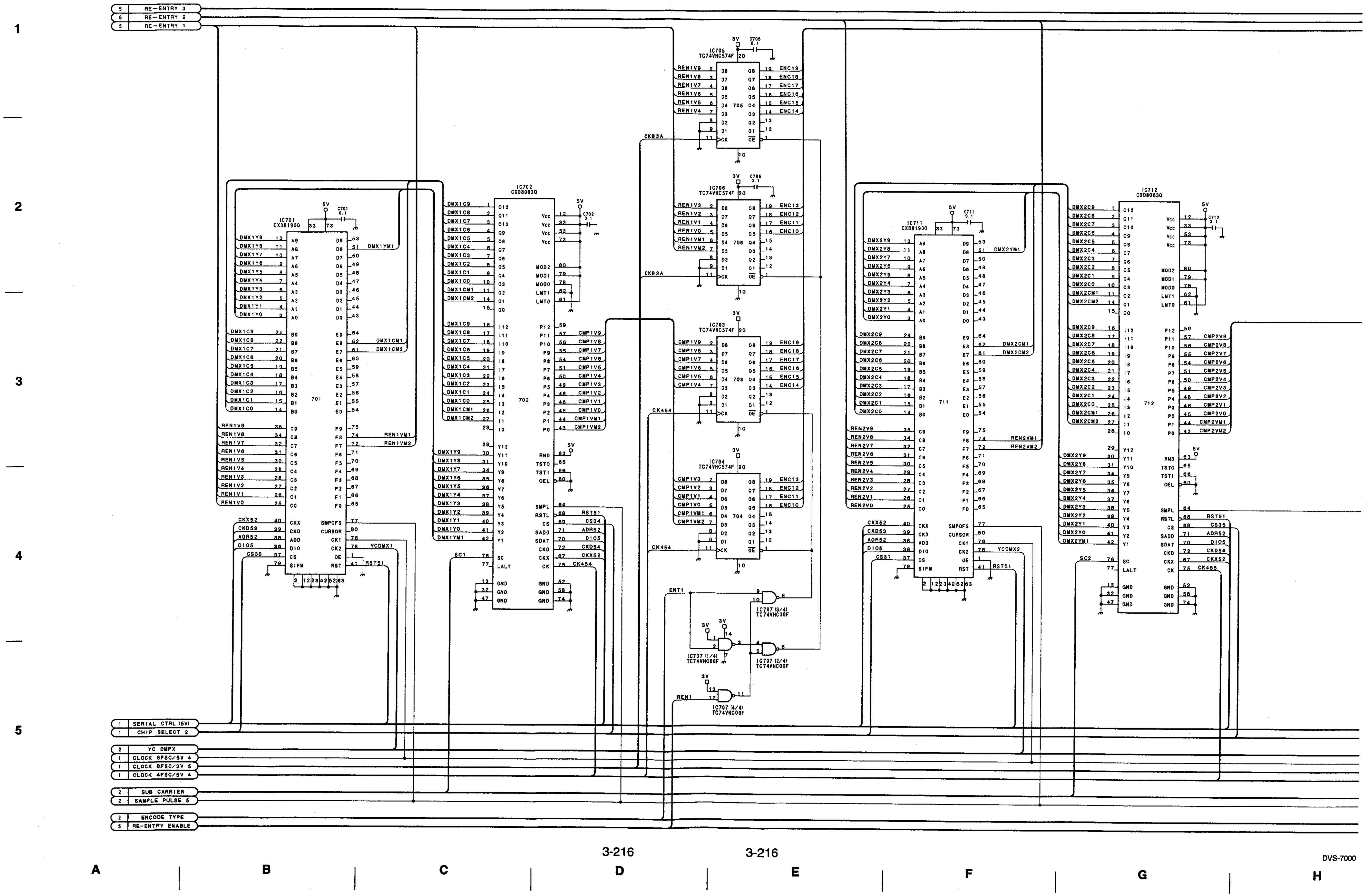

1

2

3

4

5

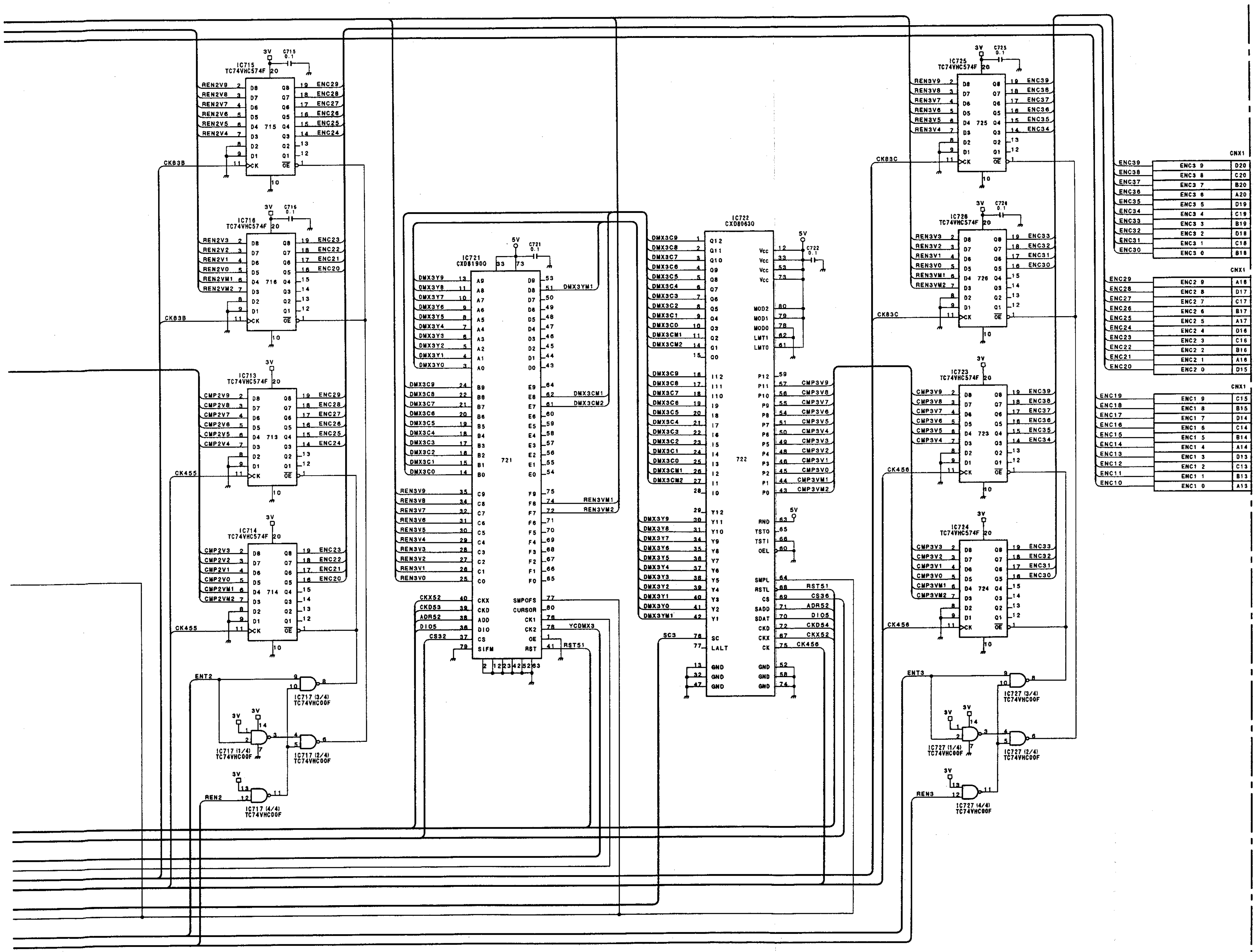

Encoder Board
ENC-34 (7/9)
BKDS-7133
BOARD NO. 1-658-418-11
LOT NO. 507-
FOR DVS-7000
B-¥SJX050-ENC34

BKDS-7133 (SY) : S/N 10001 and Higher

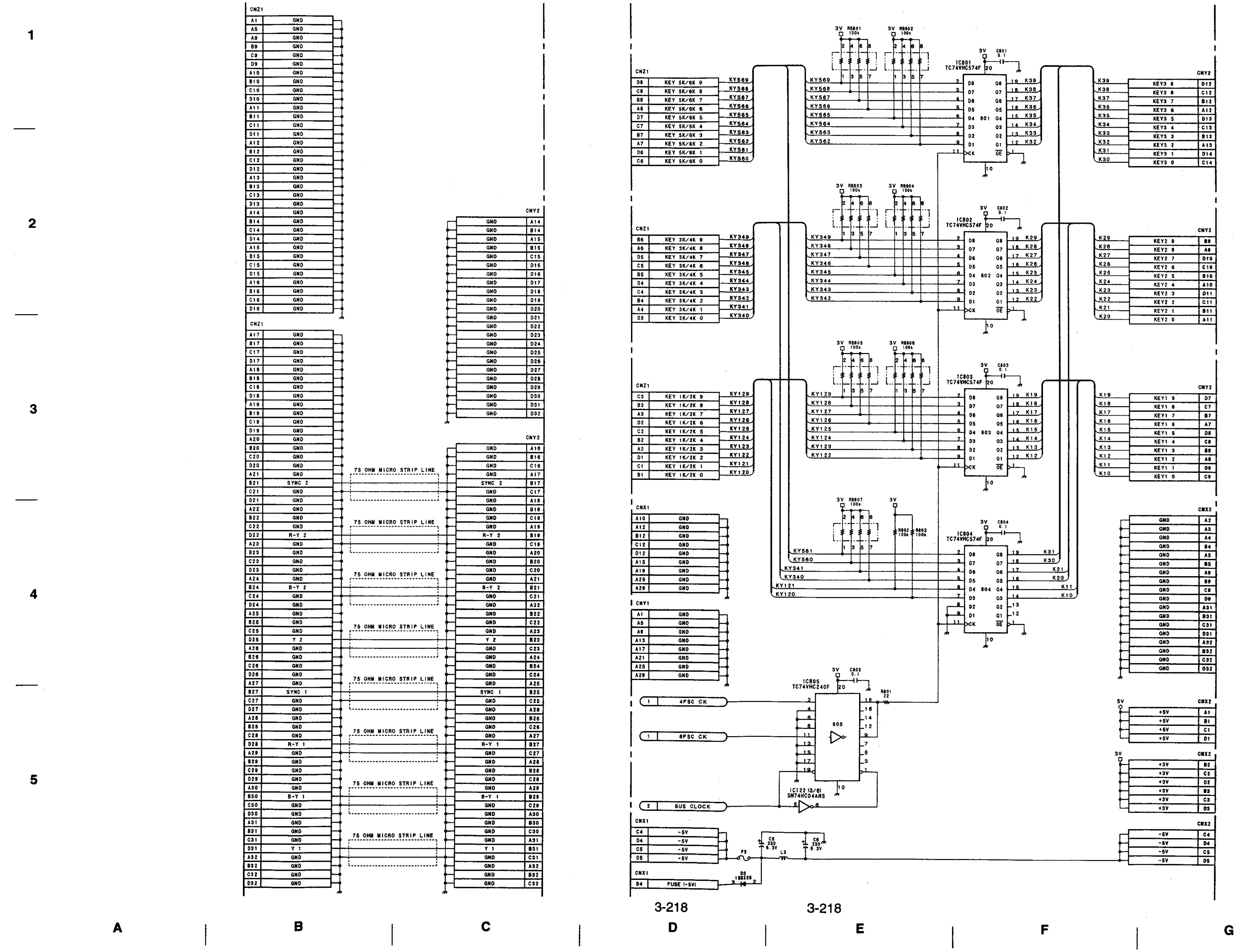

Encoder Board
ENC-34 (8/9)
BKDS-7133
BOARD NO. 1-658-418-11
LOT NO. 507-
FOR DVS-7000
B-¥SJX050-ENC34

BKDS-7133 (SY) : S/N 10001 and Higher

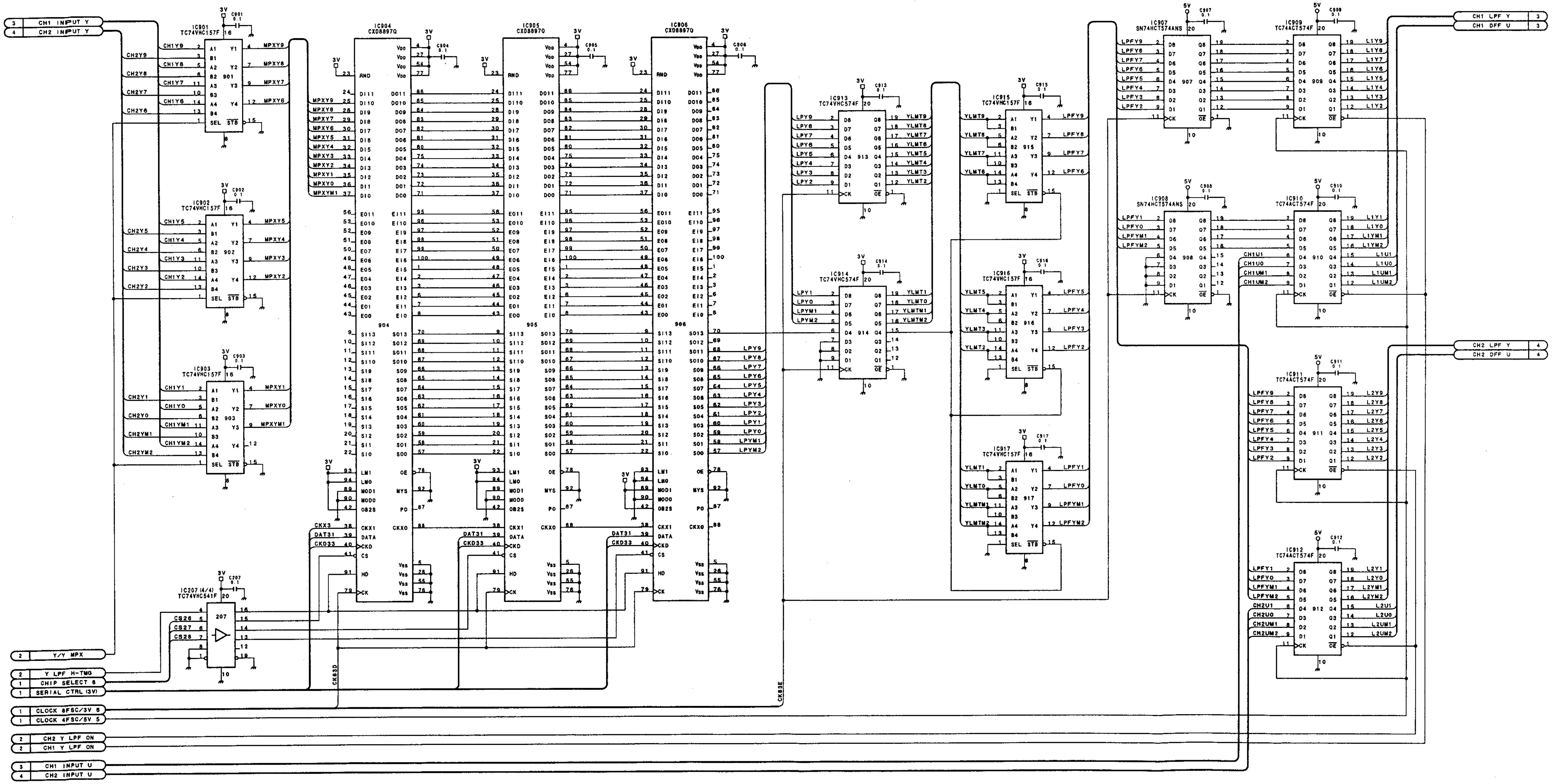

Encoder Board
ENC-34 (9/9)
BKDS-7133
BOARD NO. 1-658-418-11
LOT NO. 507-
FOR DVS-7000
B-¥SJX050-ENC34

A B C D E F G H

FM-41 (1/3) Frame Memory Board

BKDS-M1441 (SY) : S/N 10001 and Higher

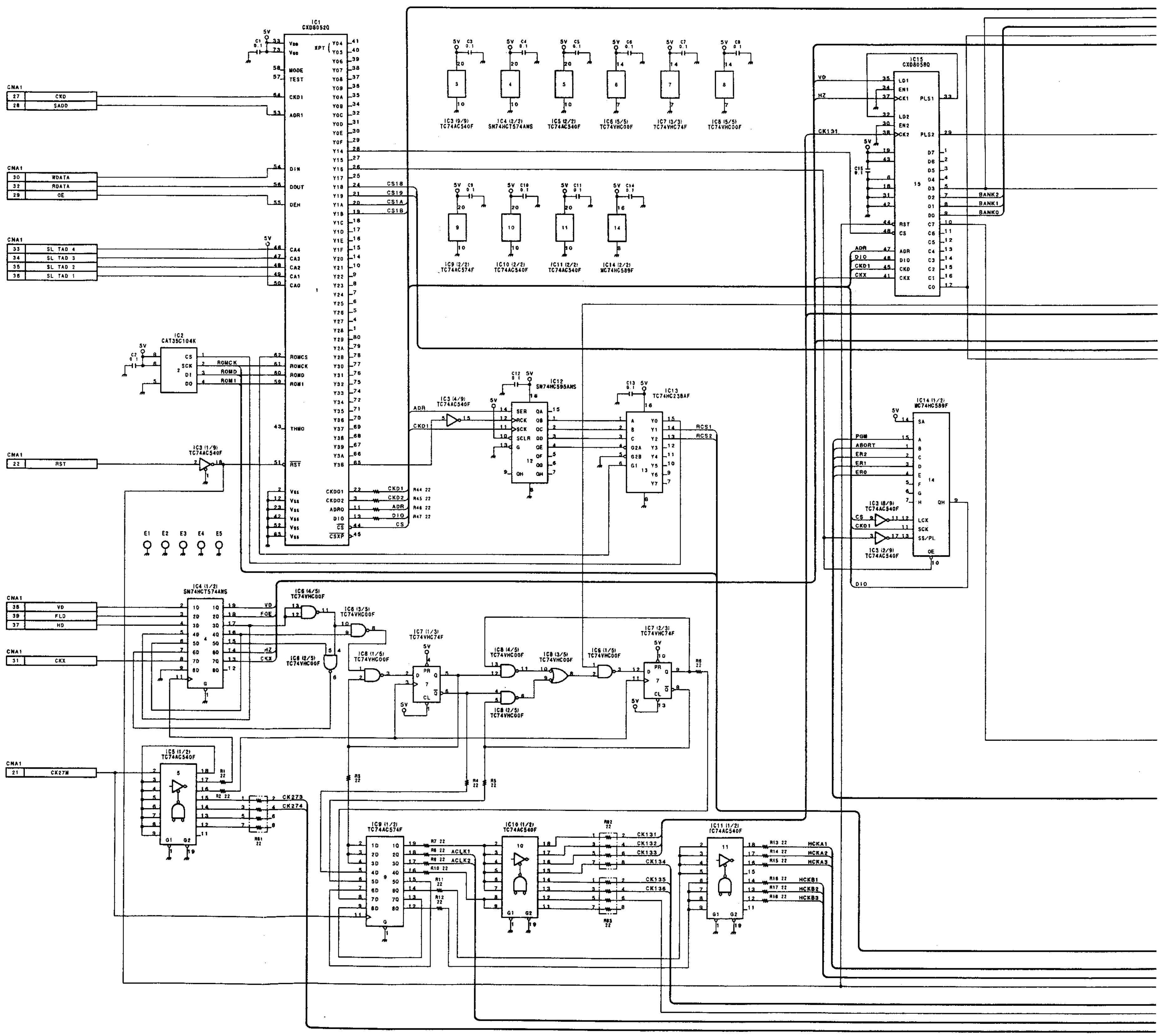

3-220

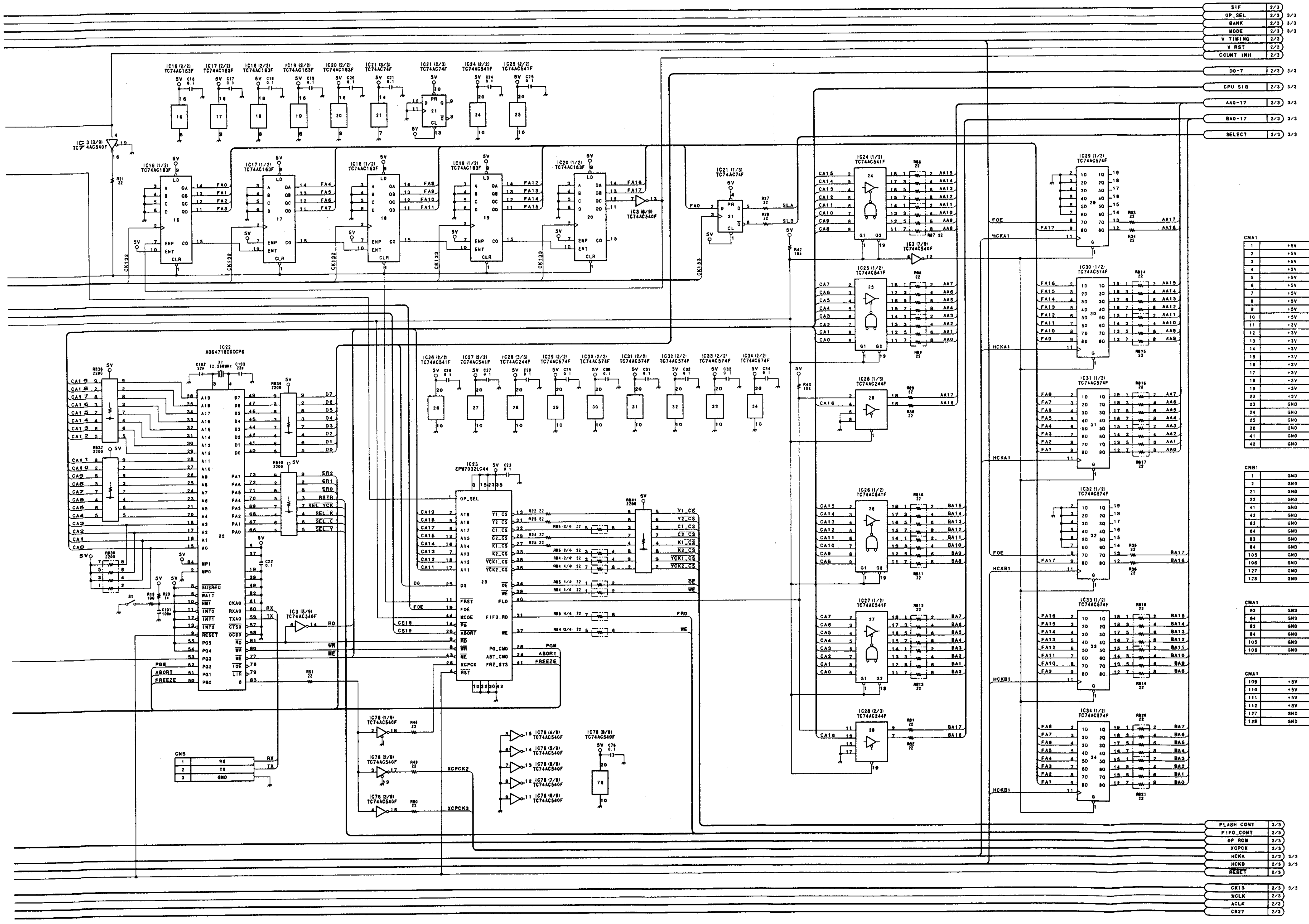

Frame Memory Board
FM-41 (1/3)
BKDS-M1441
BOARD NO. 1-660-513-11
LOT NO. 511-
FOR DVS-M1000C
B-¥SJX053-FM41

1 2 3 4 5

BKDS-M1441 (SY) : S/N 10001 and Higher

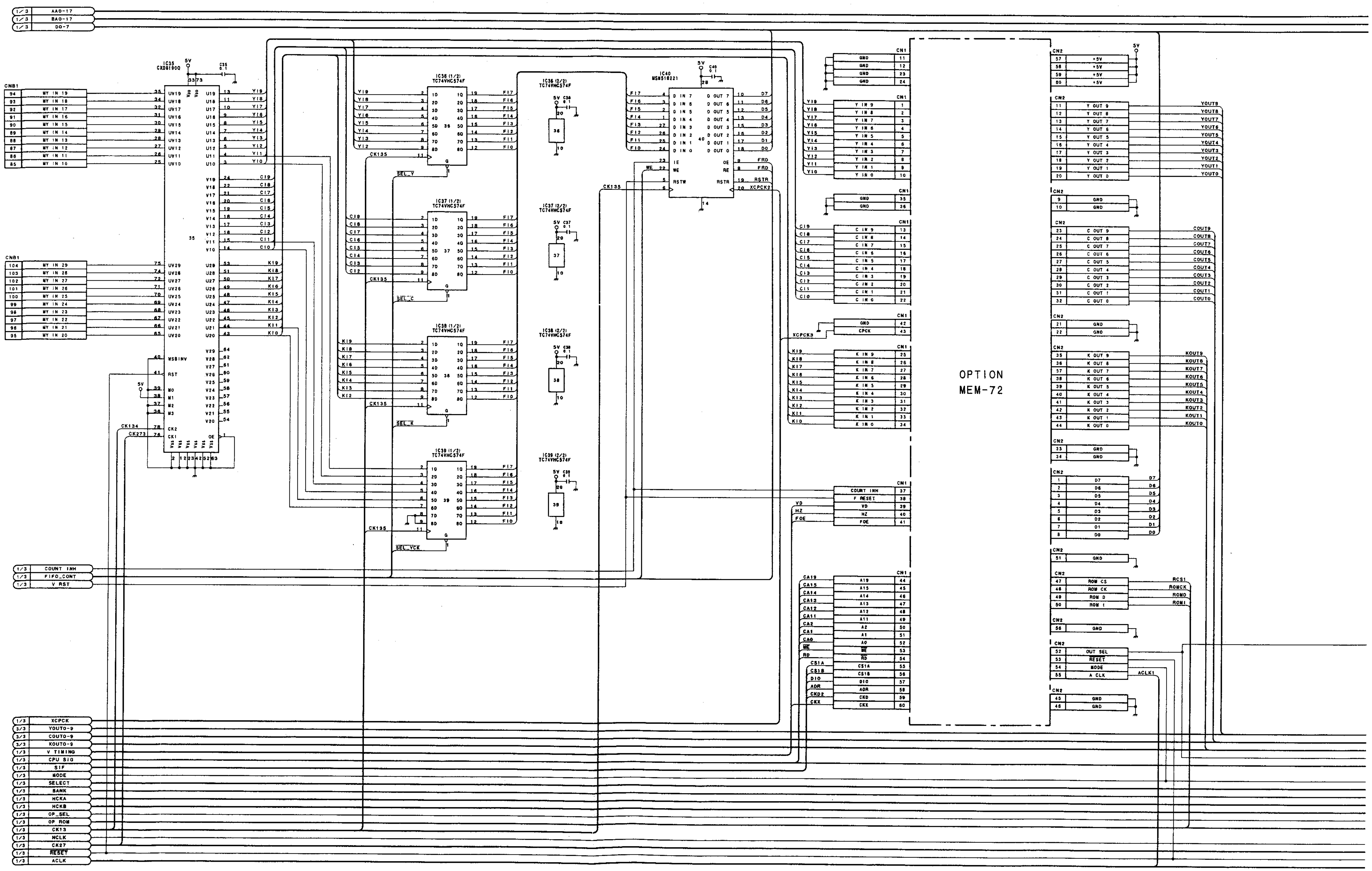

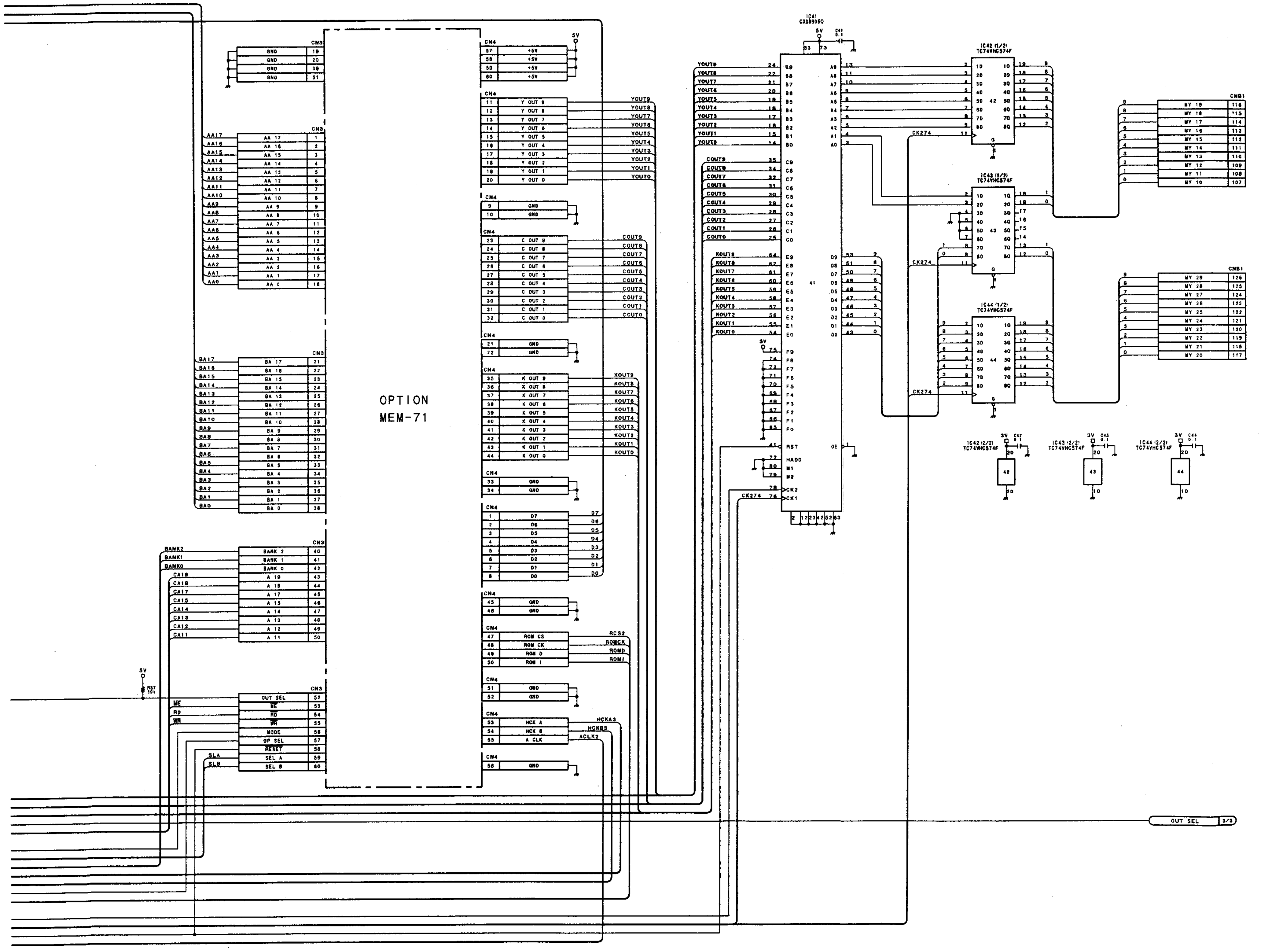

Frame Memory Board
FM-41 (2/3)
BKDS-M1441
BOARD NO. 1-660-513-11
LOT NO. 511-
FOR DVS-M1000C
B-¥SJX053-FM41

BKDS-M1441 (SY) : S/N 10001 and Higher

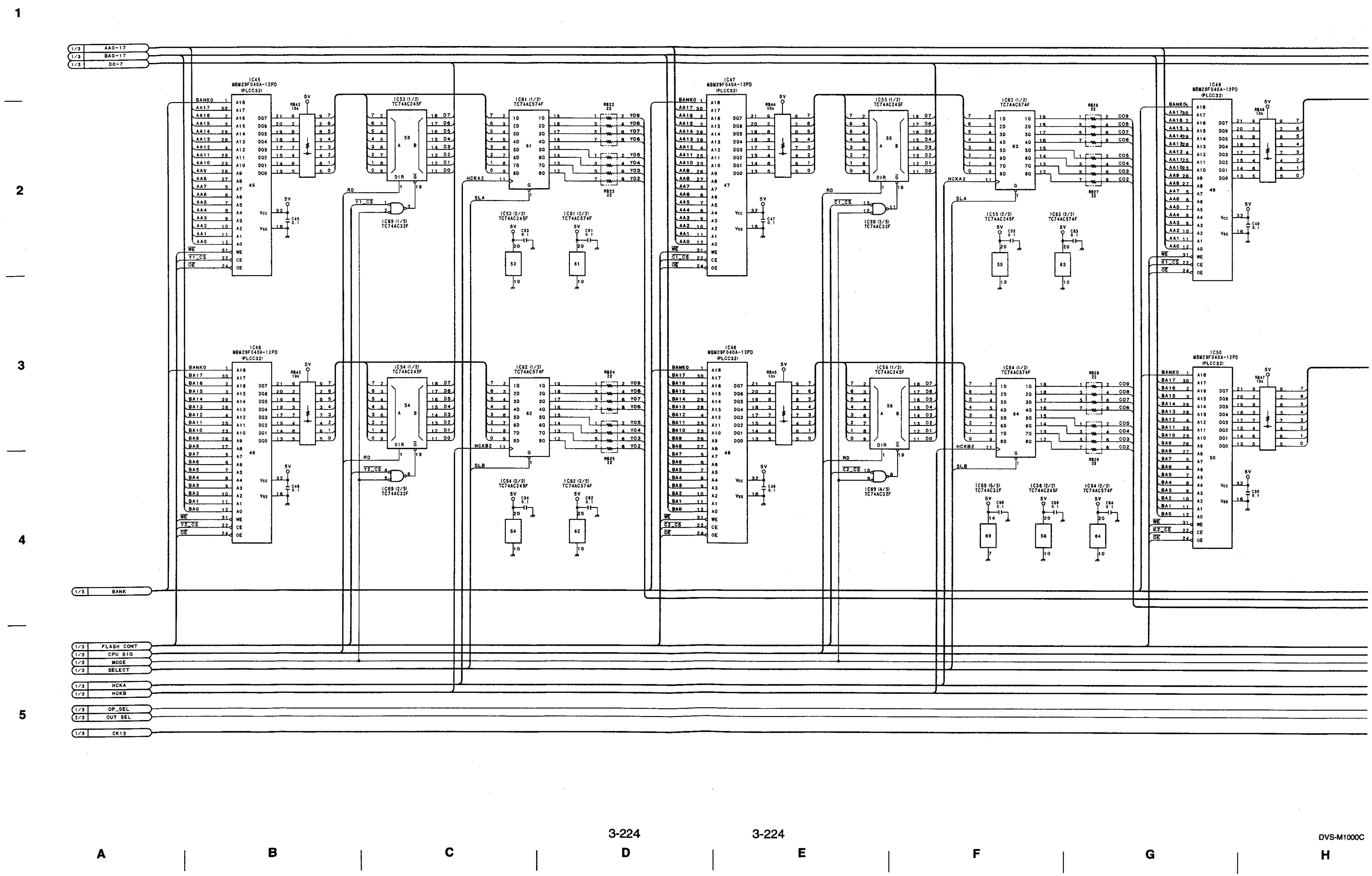

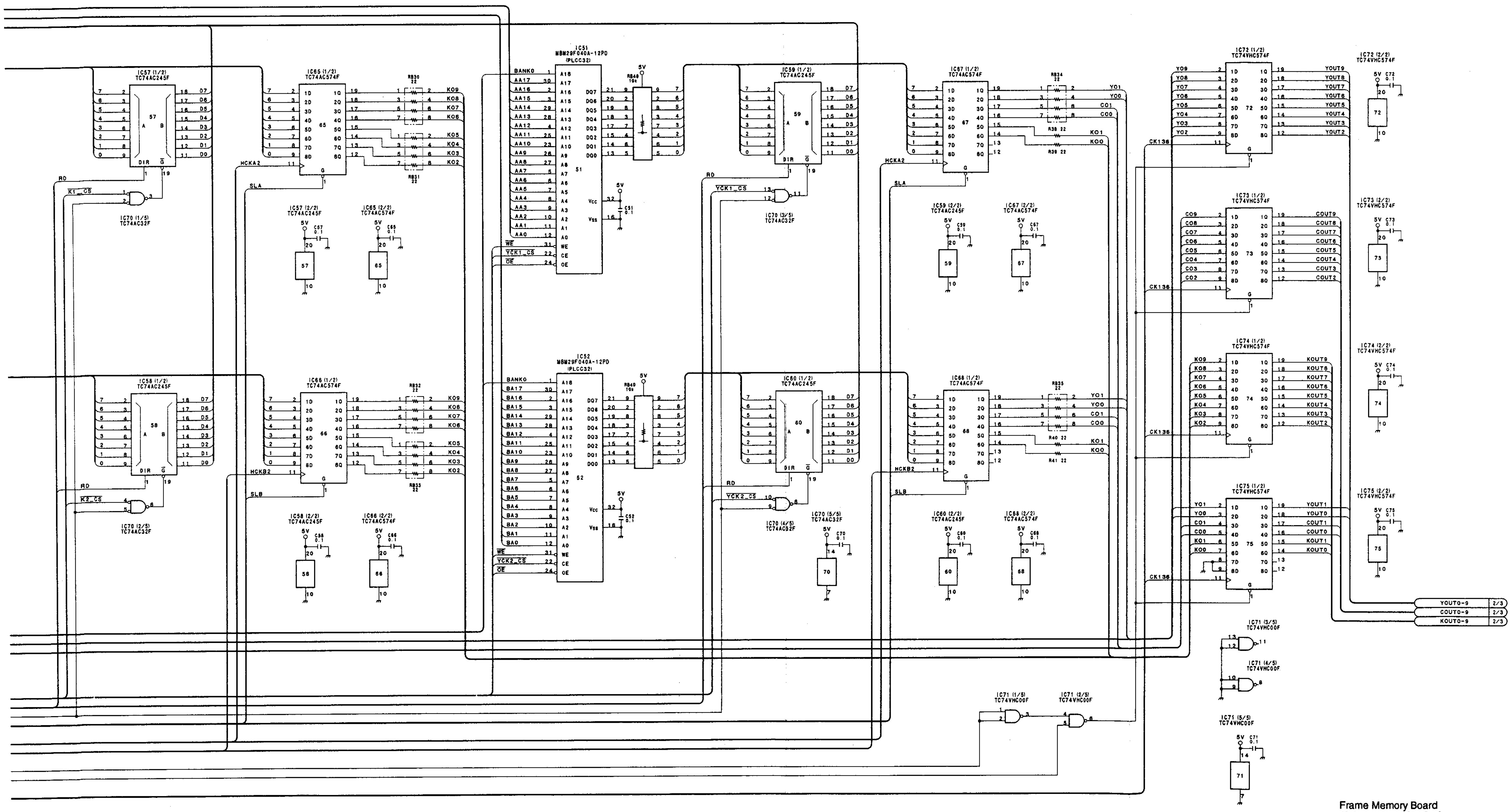

Frame Memory Board
FM-41 (3/3)
BKDS-M1441
BOARD NO. 1-660-513-11
LOT NO. 511-
FOR DVS-M1000C
B-¥SJX053-FM41

BKDS-7001 (SY) : S/N 10001 and Higher

1

2

3

4

5

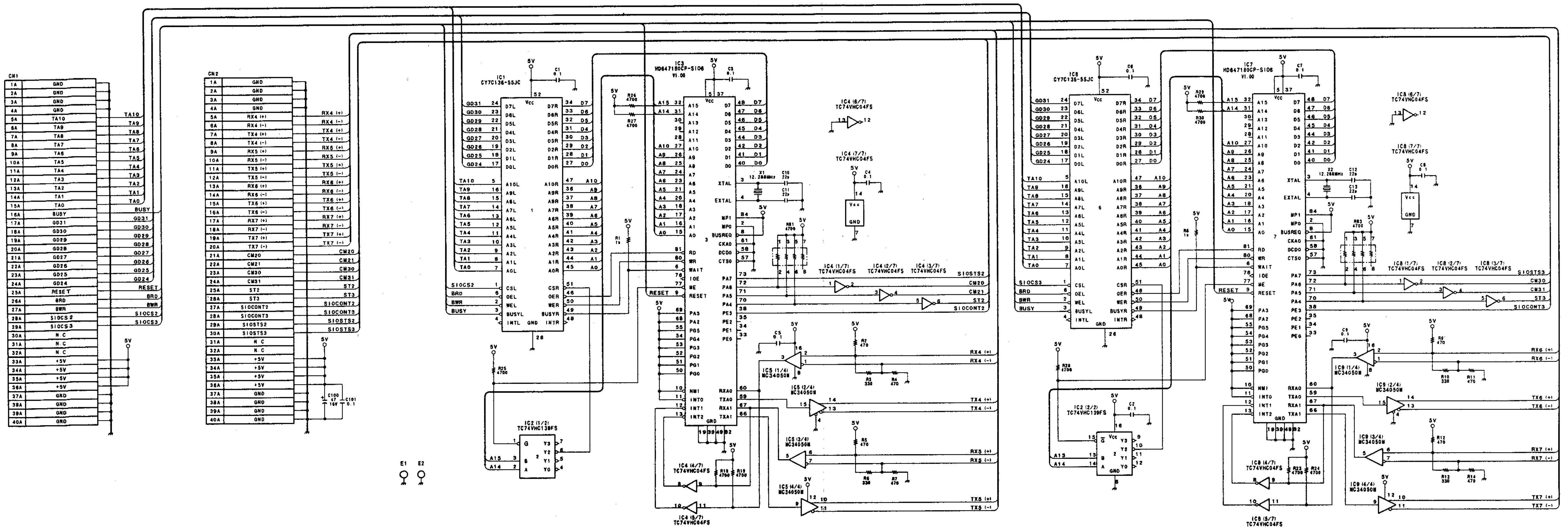

Control Port Expansion Board
IF-523
BKDS-7001
BOARD NO. 1-658-282-11
LOT NO. 505-
FOR BKDS-7011/7012/7021/7022/7023
BKDS-70xxR/70xxLR
B-¥SJXA076-IF523

BKDS-7011/7012/7021/7022/7023
BKDS-7011R/7012R/7021R/7022R/7023R
BKDS-7011LR/7012LR/7021LR/7022LR/7023LR

A | B | C | D | E | F | G | H

BKDS-M1040 (SY) : S/N 10001 and Higher

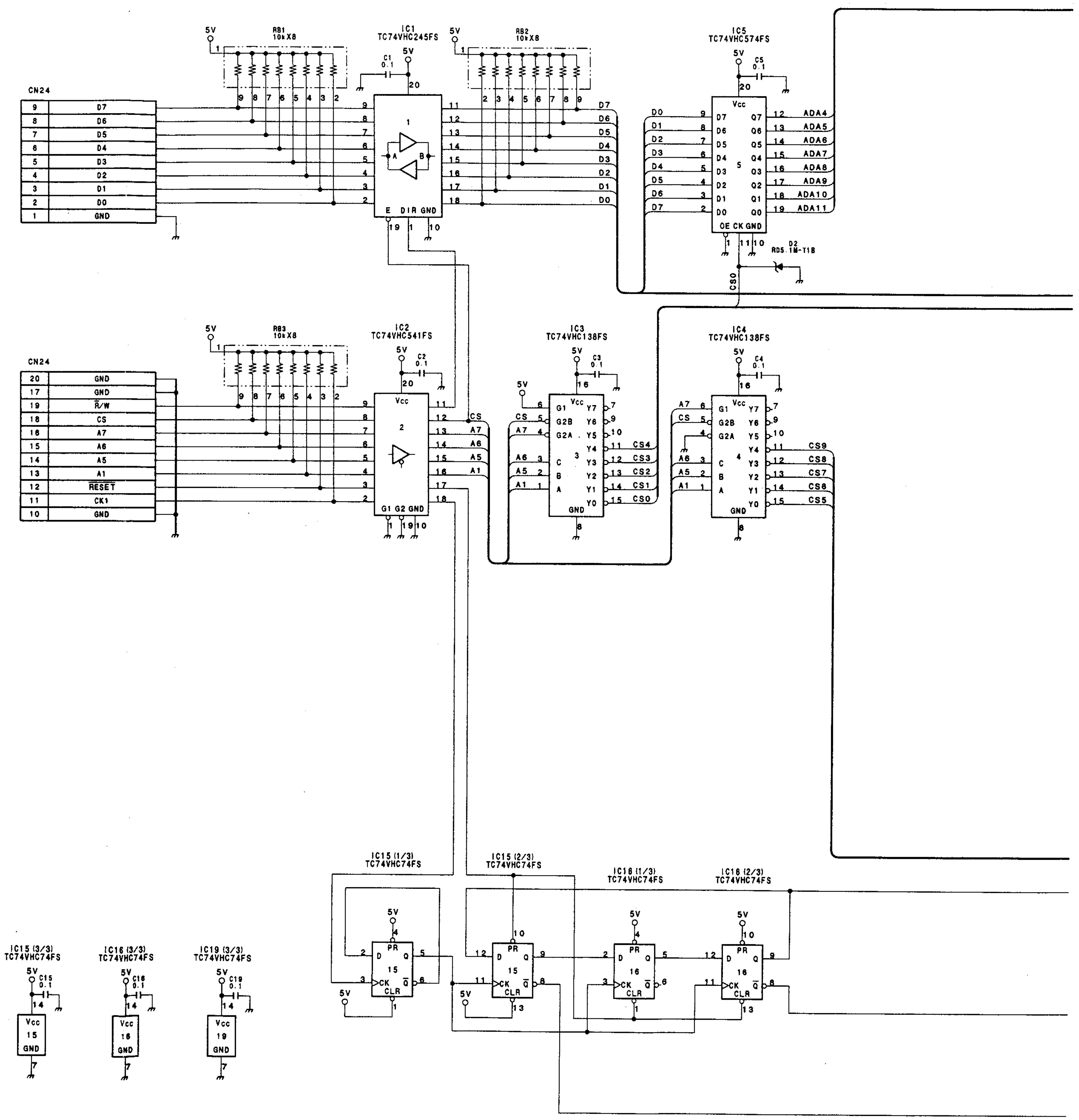

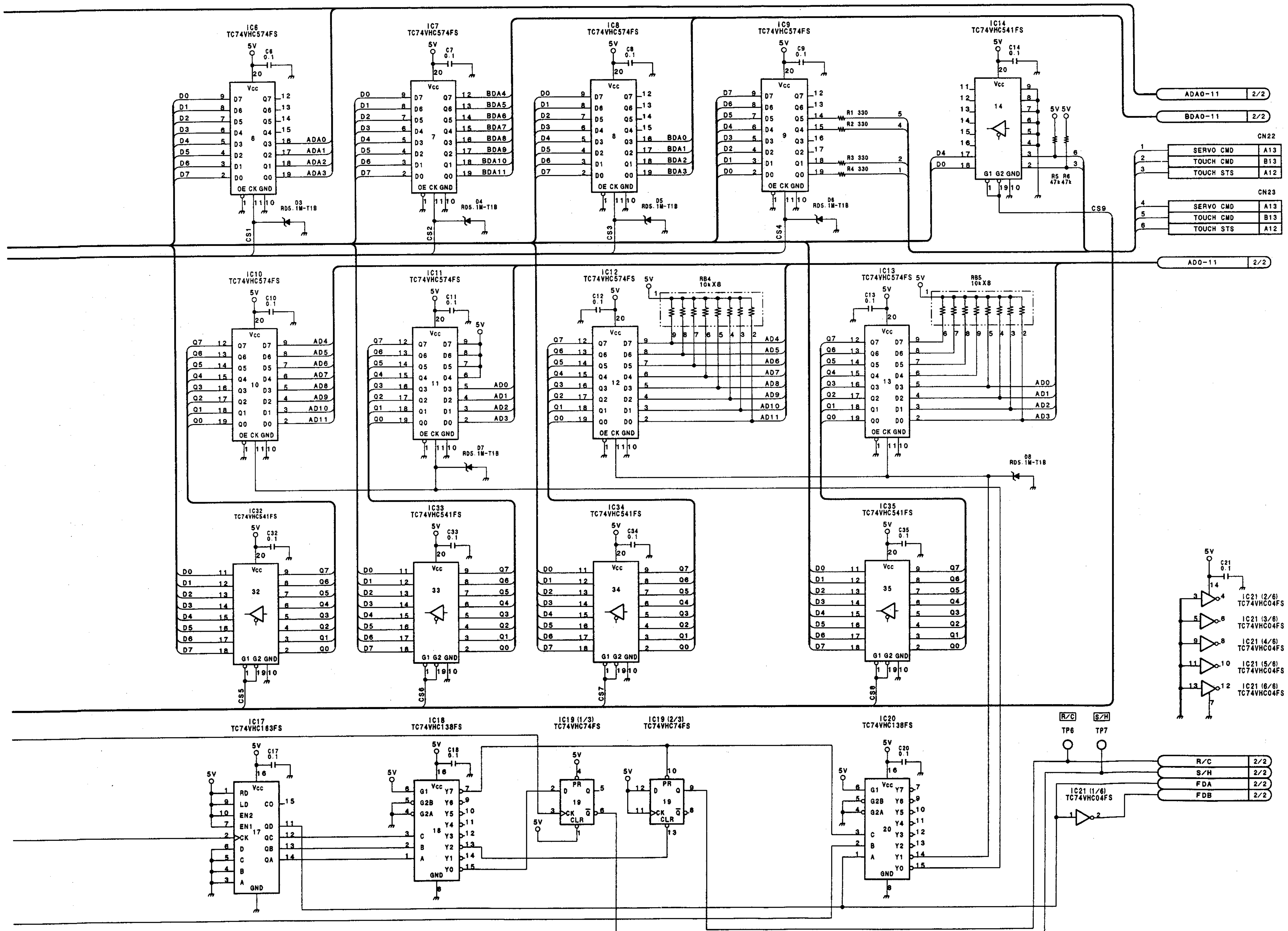

Audio Fader Interface Board
IF-533 (1/2)
BKDS-M1040
BOARD NO. 1-658-380-11
LOT NO. 506-
FOR BKDS-M1010
B-¥SJXA079-IF533

BKDS-M1040 (SY) : S/N 10001 and Higher

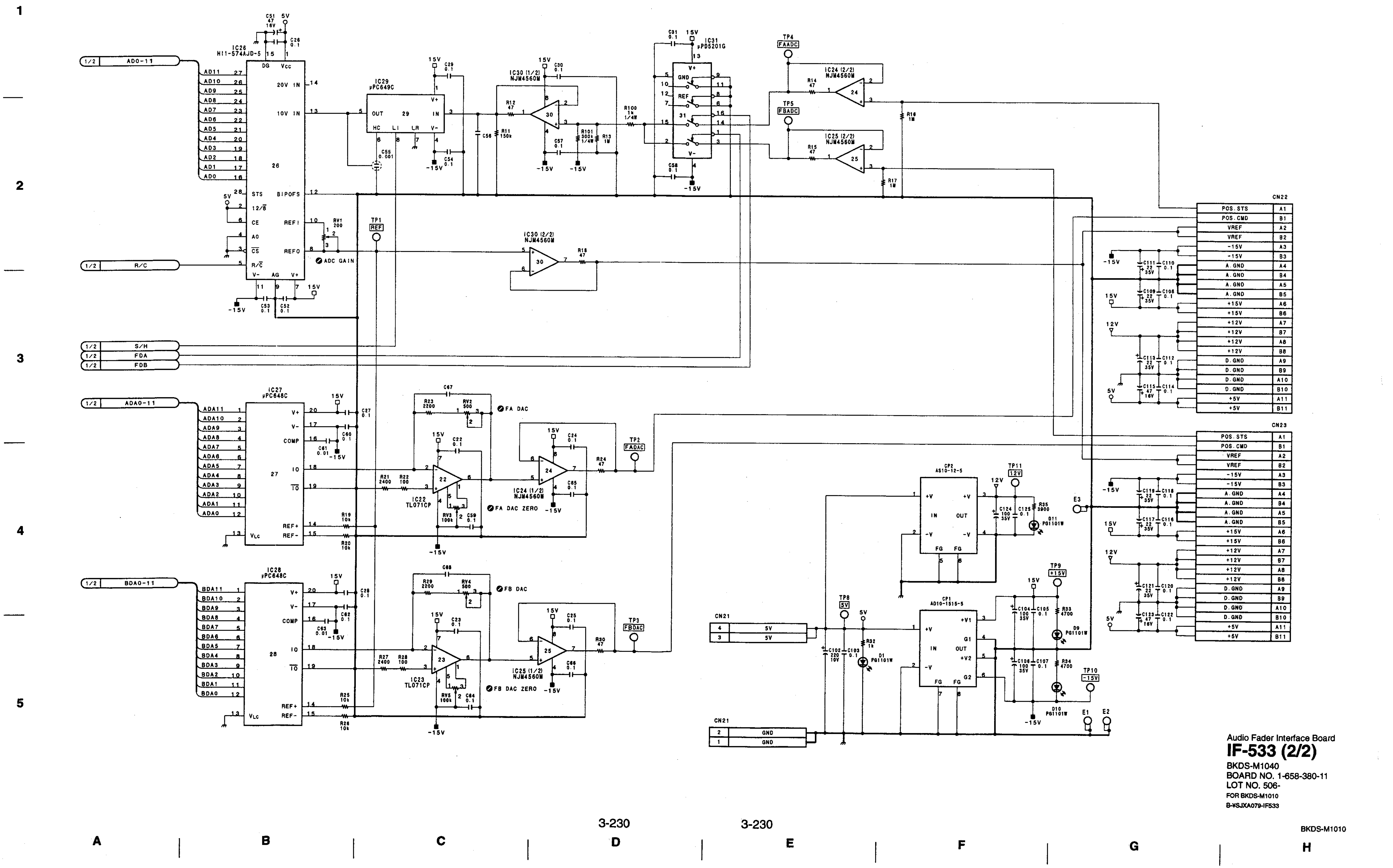

Audio Fader Interface Board
IF-533 (2/2)
BKDS-M1040
BOARD NO. 1-658-380-11
LOT NO. 506-
FOR BKDS-M1010
B-¥SJXA079-IF533

A B C D E F G H

BKDS-7075 (SY) : S/N 10001 and Higher
BKDS-70xxR/70xxLR (SY) : S/N 10001 and Higher

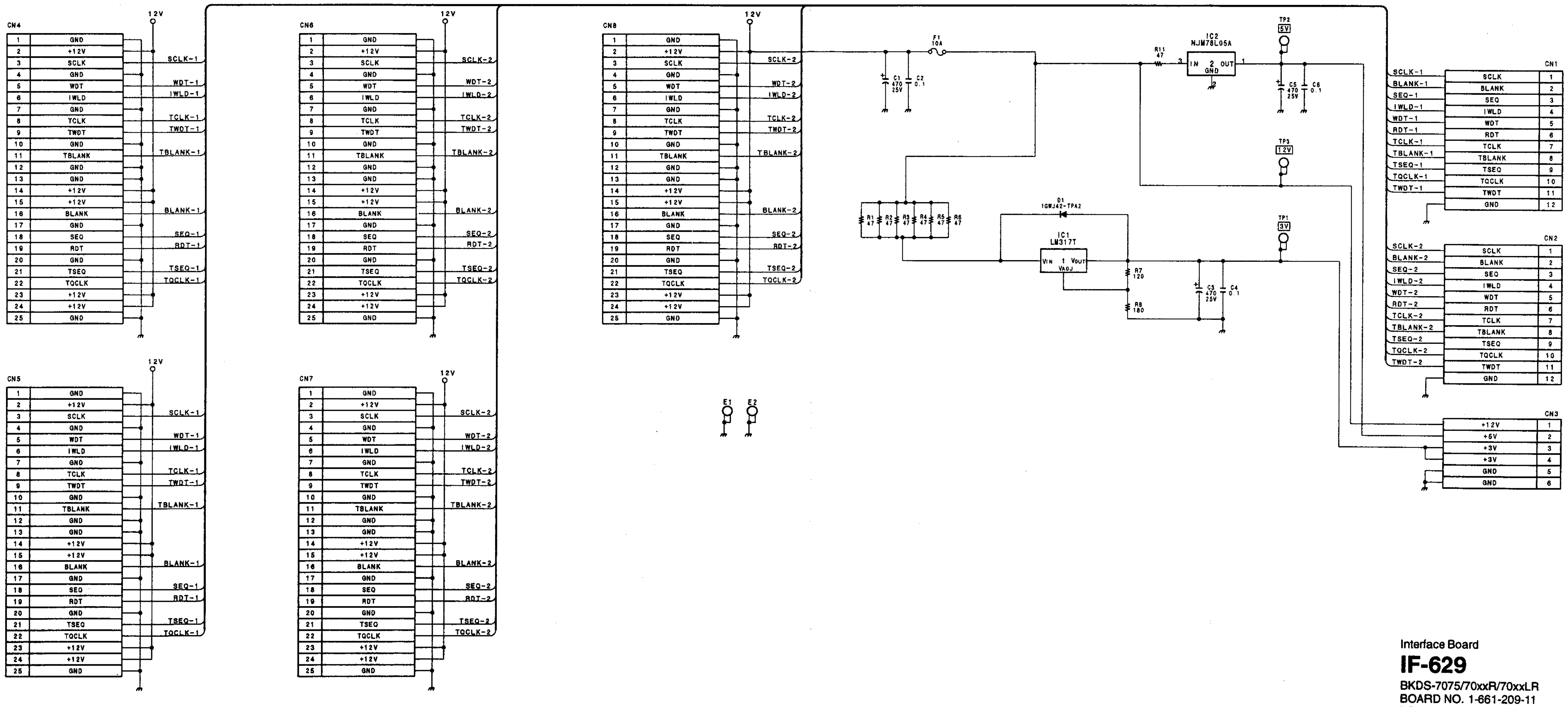

Interface Board
IF-629
BKDS-7075/70xxR/70xxLR
BOARD NO. 1-661-209-11
LOT NO. 601-
B-¥SJXA076-IF629

このマニュアルに記載されている事柄の著作権は当社にあり，説明内容は機器購入者の使用を目的としています。
従って，当社の許可なしに無断で複写したり，説明内容(操作，保守等)と異なる目的で本マニュアルを使用することを禁止します。

The material contained in this manual consists of information that is the property of Sony Corporation and is intended solely for use by the purchasers of the equipment described in this manual.
Sony Corporation expressly prohibits the duplication of any portion of this manual or the use thereof for any purpose other than the operation or maintenance of the equipment described in this manual without the express written permission of Sony Corporation.

Le matériel contenu dans ce manuel consiste en informations qui sont la propriété de Sony Corporation et sont destinées exclusivement à l'usage des acquéreurs de l'équipement décrit dans ce manuel.
Sony Corporation interdit formellement la copie de quelque partie que ce soit de ce manuel ou son emploi pour tout autre but que des opérations ou entretiens de l'équipement à moins d'une permission écrite de Sony Corporation.

Das in dieser Anleitung enthaltene Material besteht aus Informationen, die Eigentum der Sony Corporation sind, und ausschließlich zum Gebrauch durch den Käufer der in dieser Anleitung beschriebenen Ausrüstung bestimmt sind.
Die Sony Corporation untersagt ausdrücklich die Vervielfältigung jeglicher Teile dieser Anleitung oder den Gebrauch derselben für irgendeinen anderen Zweck als die Bedienung oder Wartung der in dieser Anleitung beschriebenen Ausrüstung ohne ausdrückliche schriftliche Erlaubnis der Sony Corporation.

SAFETY CHECK-OUT

After correcting the original service problem, perform the following safety checks before releasing the set to the customer :

Check the metal trim, "metallized" knobs, screws, and all other exposed metal parts for AC leakage. Check leakage as described below.

LEAKAGE TEST

The AC leakage from any exposed metal part to earth ground and from all exposed metal parts to any exposed metal part having a return to chassis, must not exceed 3.5 mA. Leakage current can be measured by any one of three methods.

1. A commercial leakage tester, such as the Simpson 229 or RCA WT-540A. Follow the manufacturers' instructions to use these instruments.
2. A battery-operated AC milliammeter. The Data Precision 245 digital multimeter is suitable for this job.
3. Measuring the voltage drop across a resistor by means of a VOM or battery-operated AC voltmeter. The "limit" indication is 5.25 V, so analog meters must have an accurate low-voltage scale. The Simpson 250 and Sanwa SH-63Trd are examples of a passive VOM that is suitable. Nearly all battery operated digital multimeters that have a 20 V AC range are suitable. (See Fig. A)

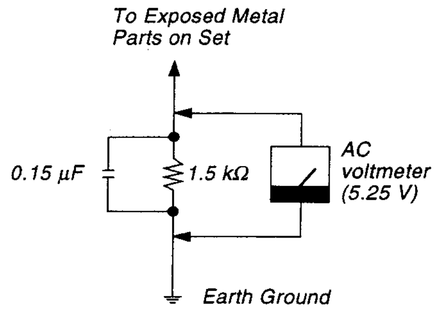

Fig. A. Using an AC voltmeter to check AC leakage.

DVS-M1000C (SY)
DVS-7000 (SY)
DMK-7000 (SY) J, E
9-967-624-02

Sony Corporation
Broadcast Products Company

Printed in Japan
1996. 6 08
© 1995
Published by Broadcast Products Company

SP0385

SONY

DIGITAL MASTER SWITCHER

DVS-M1000C

DIGITAL VIDEO SWITCHER

DVS-7000/7200

DIGITAL MULTI KEYER

DMK-7000

AUX BUS REMOTE PANEL

BKDS-7080/7081

SUPPLEMENT-4

FOR MAINTENANCE MANUAL Part 2 Volume 5

SCHEMATIC DIAGRAMS 1 (A through I)

このSUPPLEMENTを，お手持ちのマニュアルに追加してご使用ください。

Please add the pages from this supplement to your own manual.

対象マニュアル (部品番号) /Applicable Manual (Manual Code)

1st Edition Rev.2 (9-967-624-03)

内容 /Contents

上記機種に関する情報追加

Additional information for the above models.

Section 1 Location of Mounted Circuit Boards
Section 2 Overall Block Diagram & Frame Wiring
Section 3 Schematic Diagrams

DMK-7000 (SY)
DVS-7000/7200 (SY)
DVS-M1000C (SY) J, E
9-967-624-84

Sony Corporation
Communication System Solutions Network Company

Printed in Japan
2000. 2 08
©2000

Section 1
Location of Mounted Circuit Boards

1-1. BKDS-7080

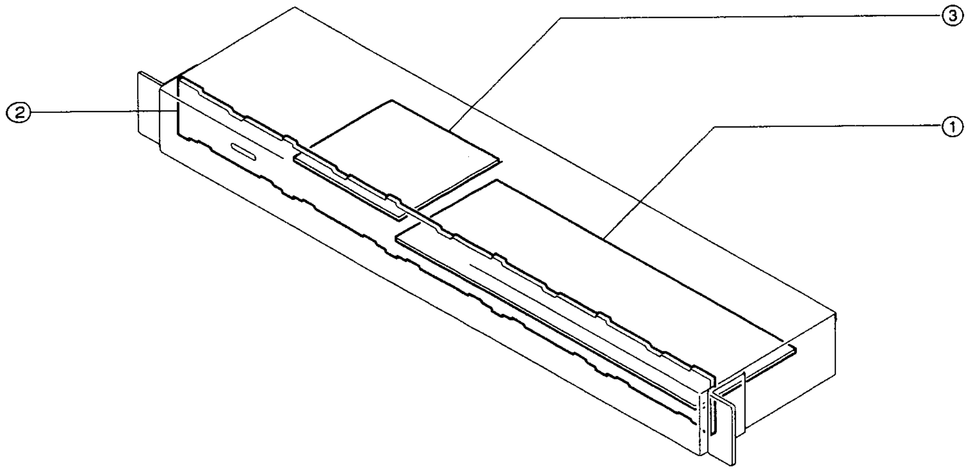

No.	Board name	Circuit function	Model name
1	CPU-306	System Control Board	BKDS-7080
2	KY-469A	Switch Board	
3	Switching Regulator	Power Supply	

1-2. BKDS-7081

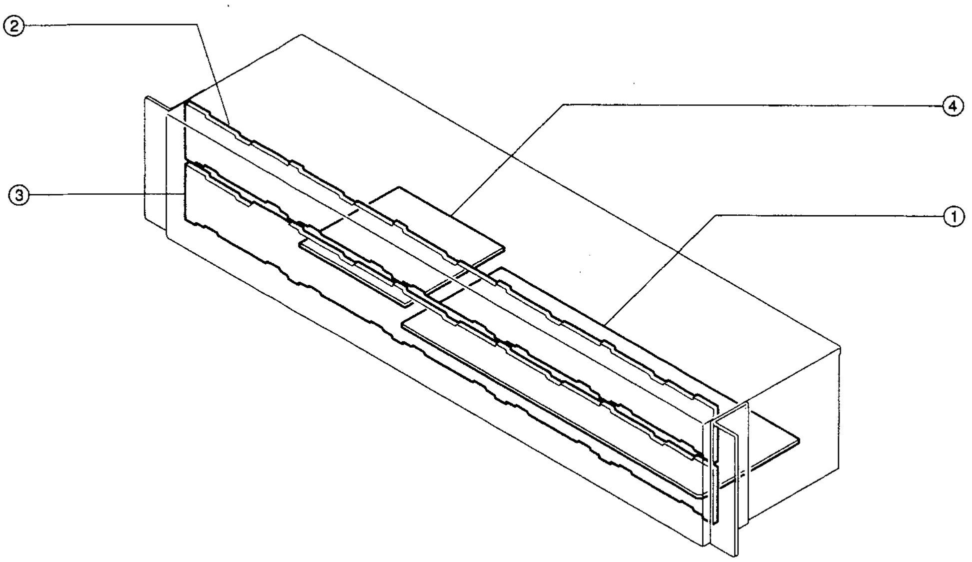

No.	Board name	Circuit function	Model name
1	CPU-306	System Control Board	BKDS-7081
2	KY-469B	Switch Board	
3	KY-469C	Switch Board	
4	Switching Regulator	Power Supply	

Index

Section 2
Overall Block Diagram & Frame Wiring

BKDS-7080/7081 AUX BUS Remote Panel

No.	Board name	Circuit function	Model name	Page
1	Overall	—	BKDS-7080/7081	2-2
2	Frame Wiring	—	BKDS-7080/7081	2-3

2-1

 BKDS-7080/7081 Overall

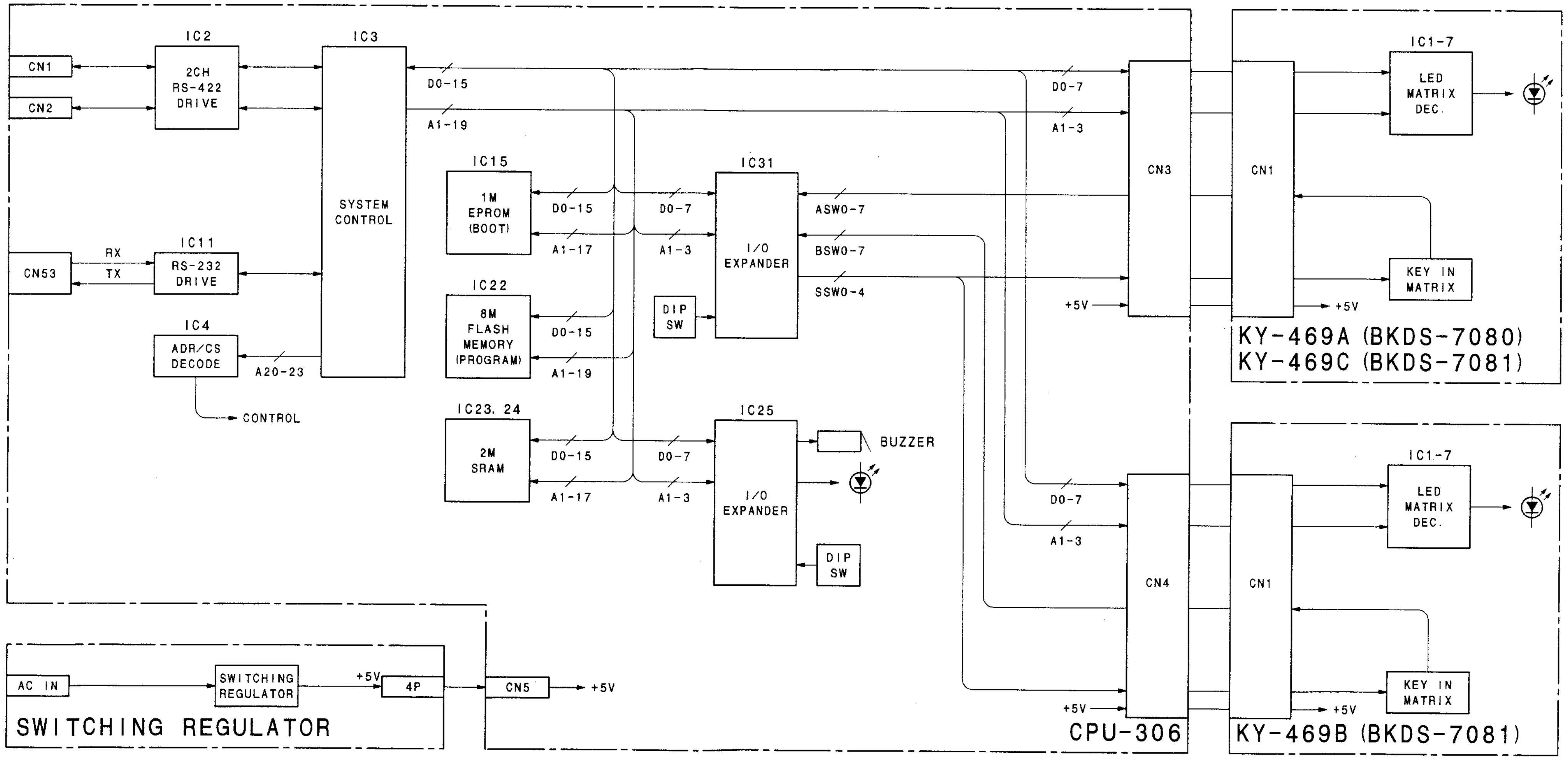

Overall

 BKDS-7080/7081 Frame Wiring

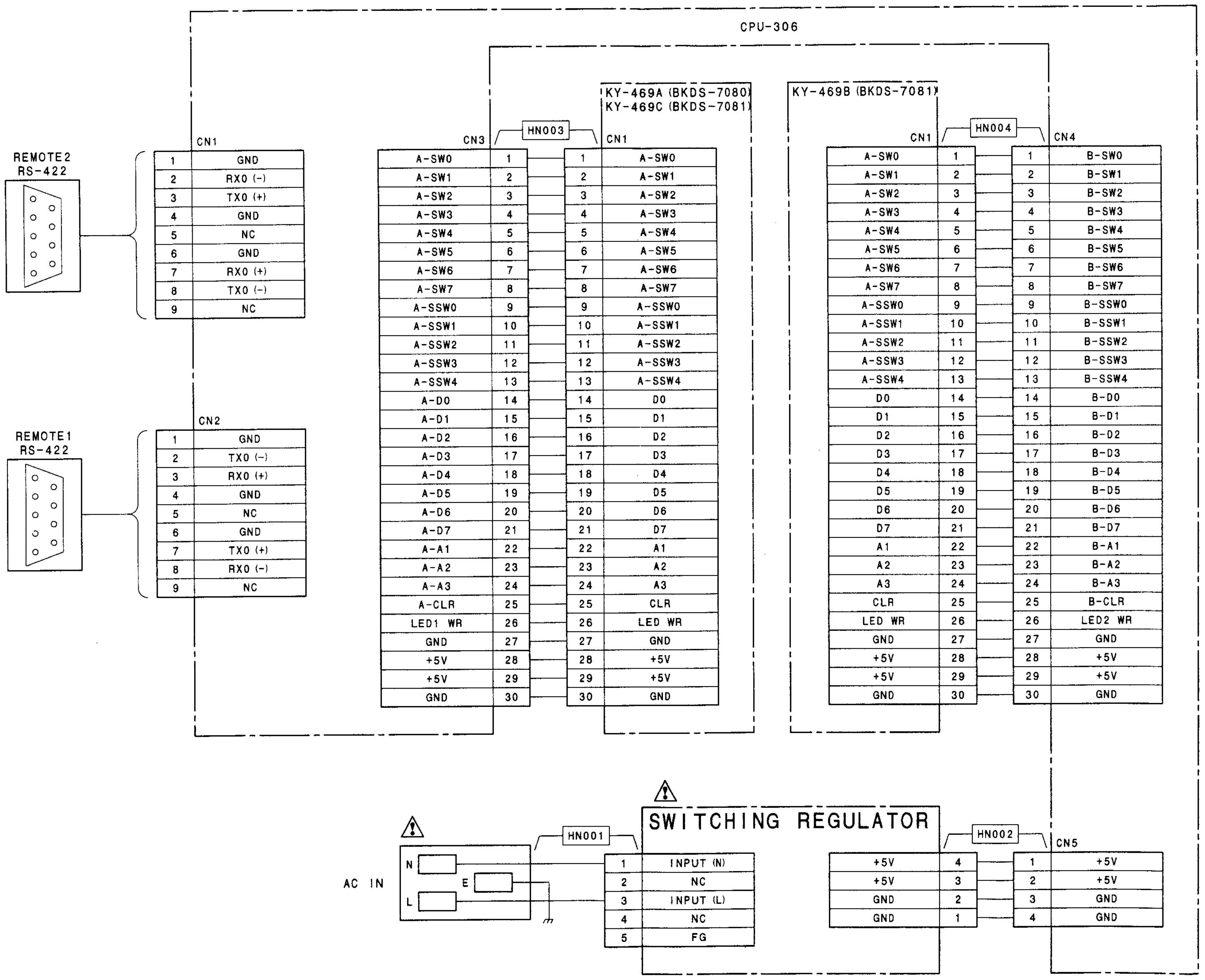

 Index

Section 3
Schematic Diagrams

BKDS-7080/7081 AUX BUS Remote Panel

No.	Board name	Circuit function	Model name	Page
1	CPU-306	System Control Board	BKDS-7080/7081	3-2

 3-1

 CPU-306 (1/3)

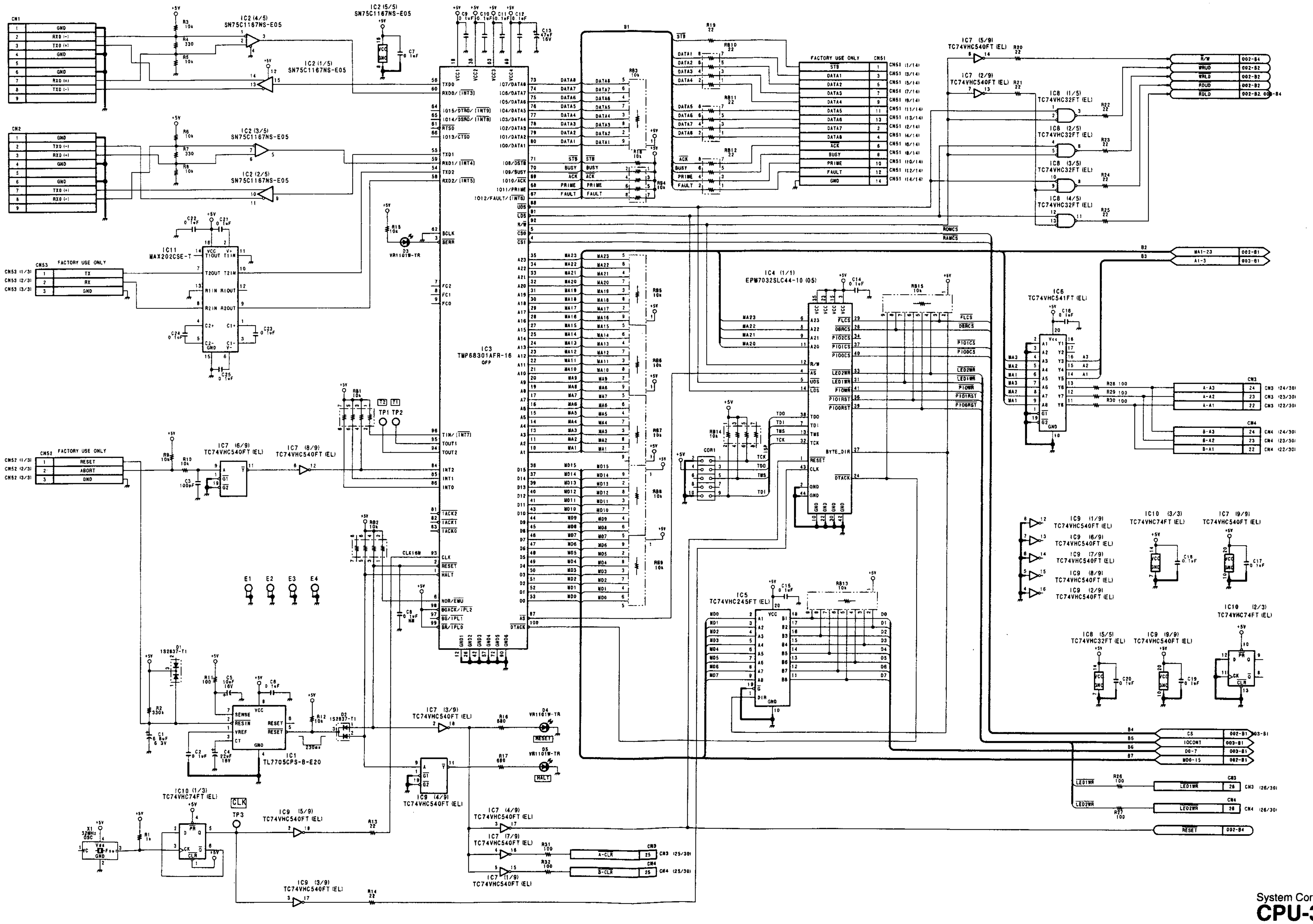

System Control Board
CPU-306 (1/3)
BOARD NO. 1-677-086-11
LOT NO. 910-
BKDS-7080/7081
BKDS-7080_CPU-306_002_1

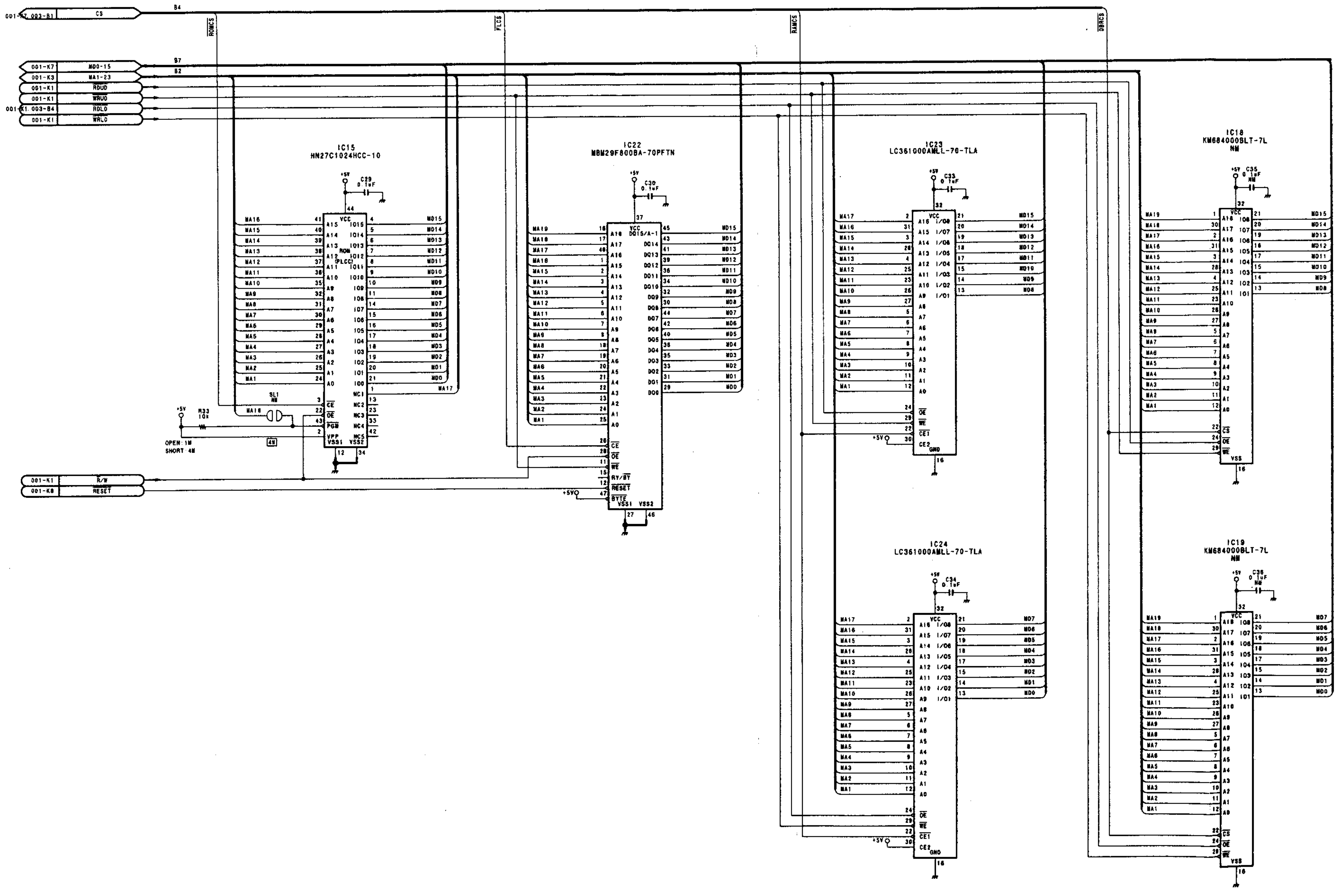

System Control Board
CPU-306 (2/3)
BOARD NO. 1-677-086-11
LOT NO. 910-
BKDS-7080/7081
BKDS-7080_CPU-306_002_2

CPU-306 (3/3)

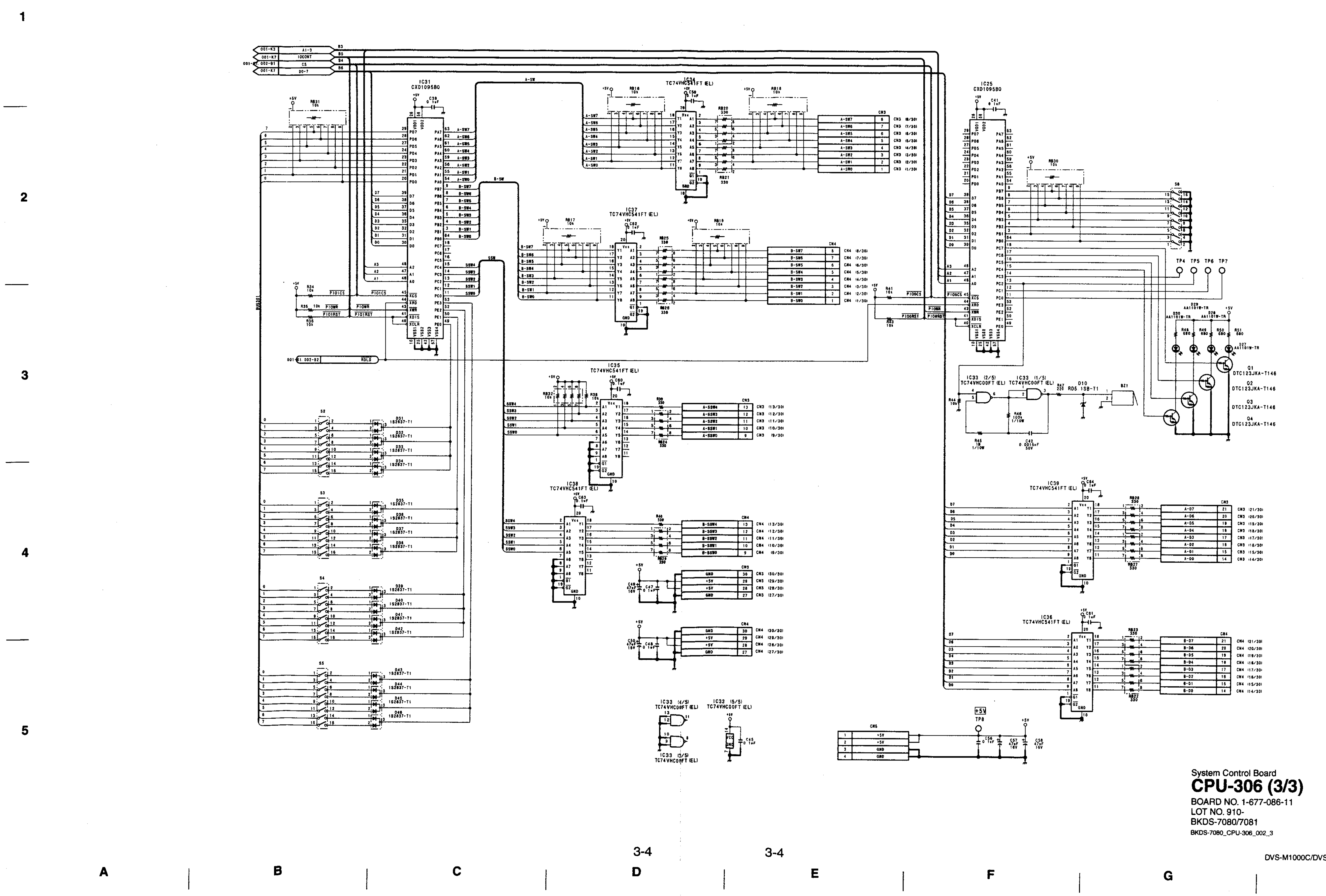

System Control Board
CPU-306 (3/3)
BOARD NO. 1-677-086-11
LOT NO. 910-
BKDS-7080/7081
BKDS-7080_CPU-306_002_3

3-4